FIGURE 1

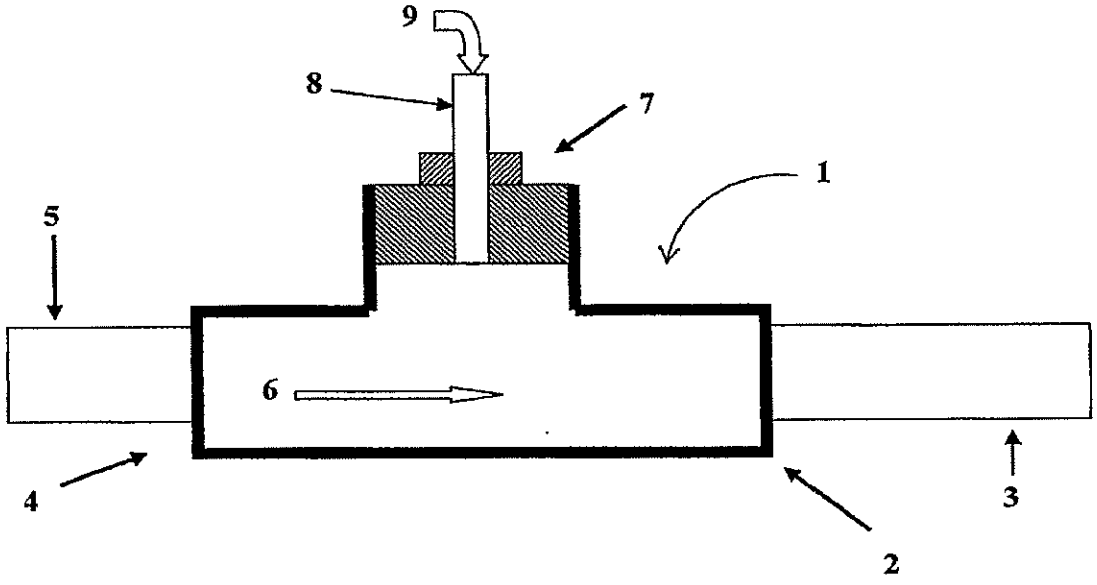

FIGURE 2

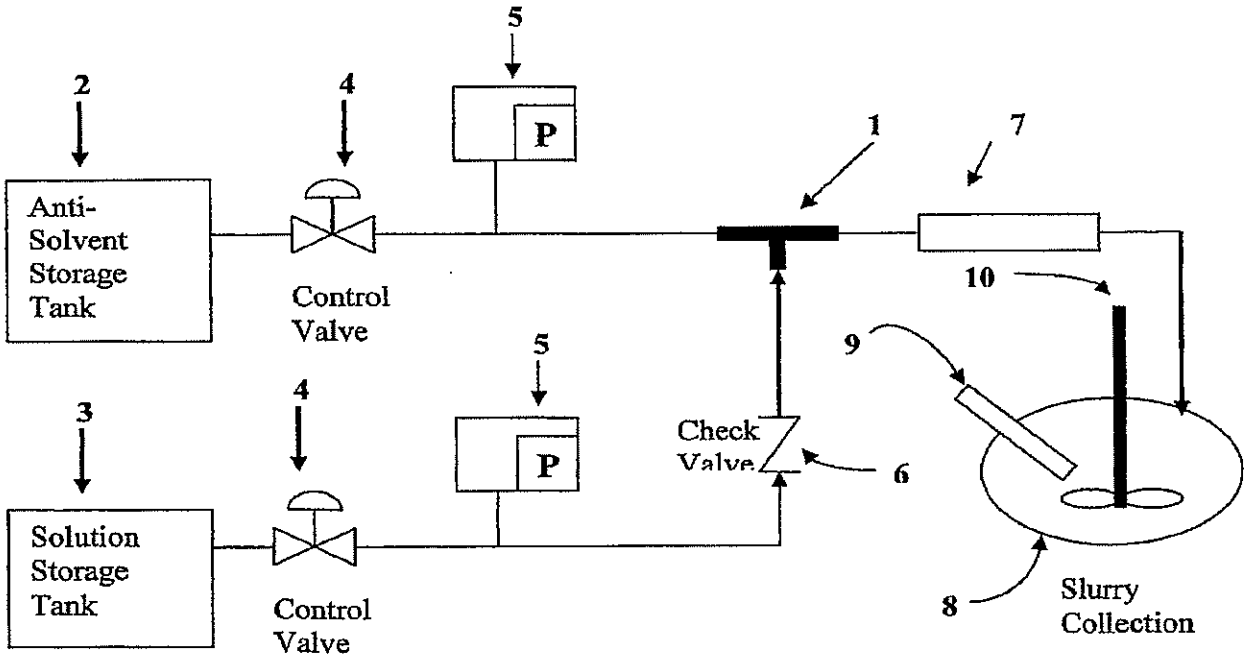

FIGURE 3

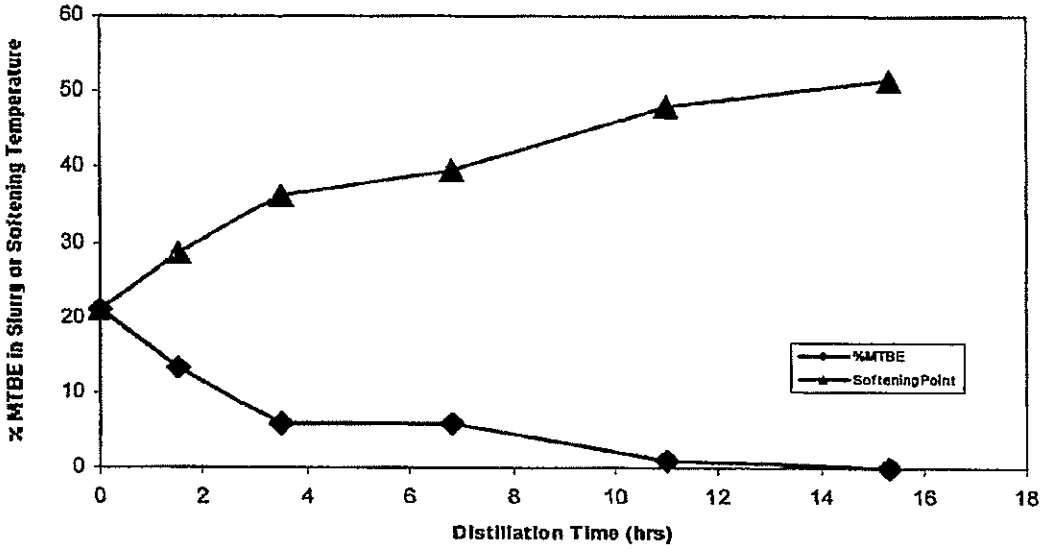
% MTBE in Slurry or Softening Temperature
60
50
40
30
20
10
0
0
2
4
6
8
10
12
14
16
18
Distillation Time (hrs)
%MTBE
SofteningPoint

FIGURE 4

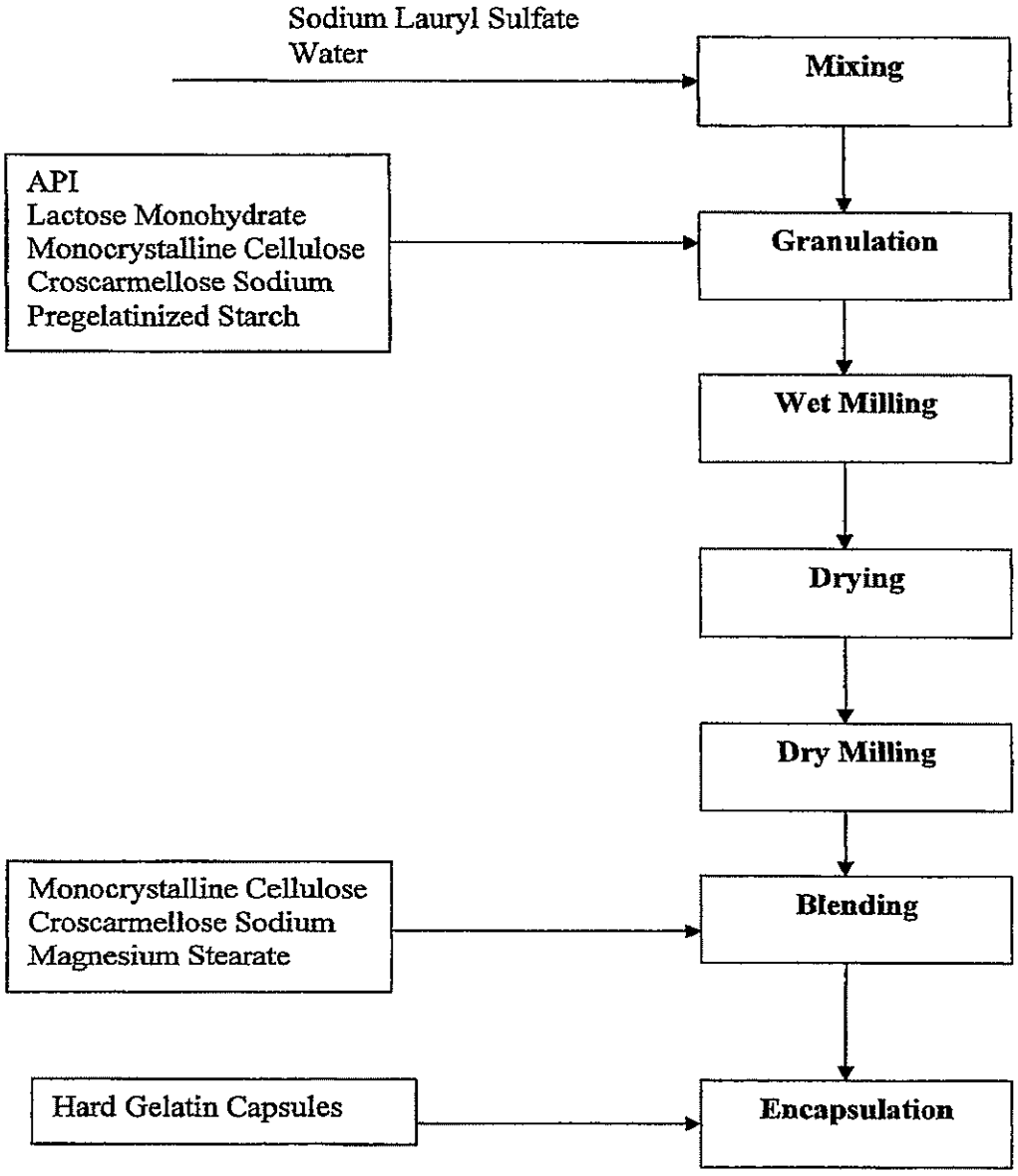
Sodium Lauryl Sulfate
Water
Mixing
API
Lactose Monohydrate
Monocrystalline Cellulose
Croscarmellose Sodium
Pregelatinized Starch
Granulation
Wet Milling
Drying
Dry Milling
Monocrystalline Cellulose
Croscarmellose Sodium
Magnesium Stearate
Blending
Hard Gelatin Capsules
Encapsulation

FIGURE 5

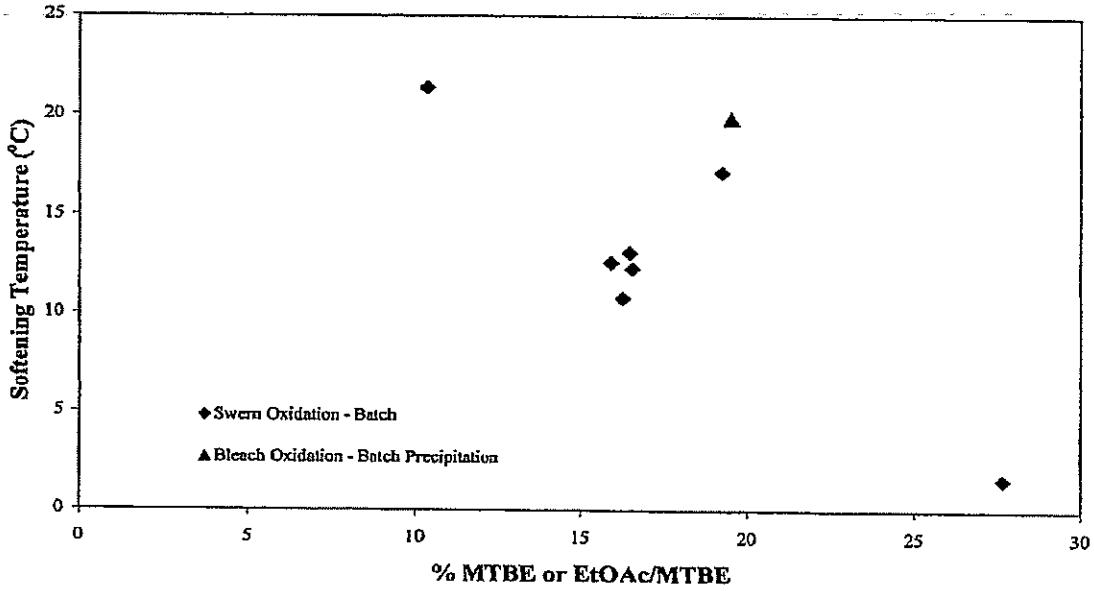

FIGURE 6

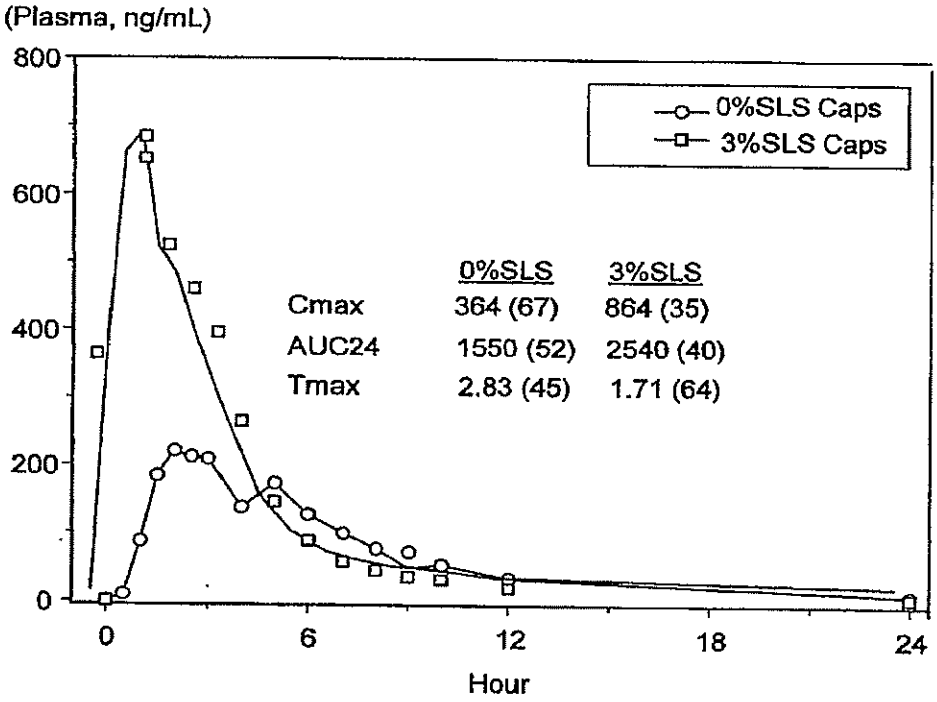

FIGURE 7

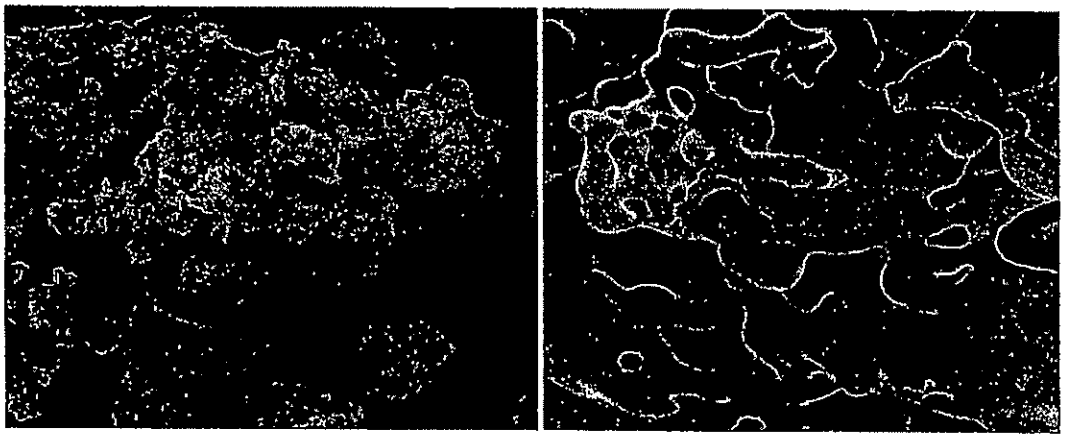

7a 7b

FIGURE 8

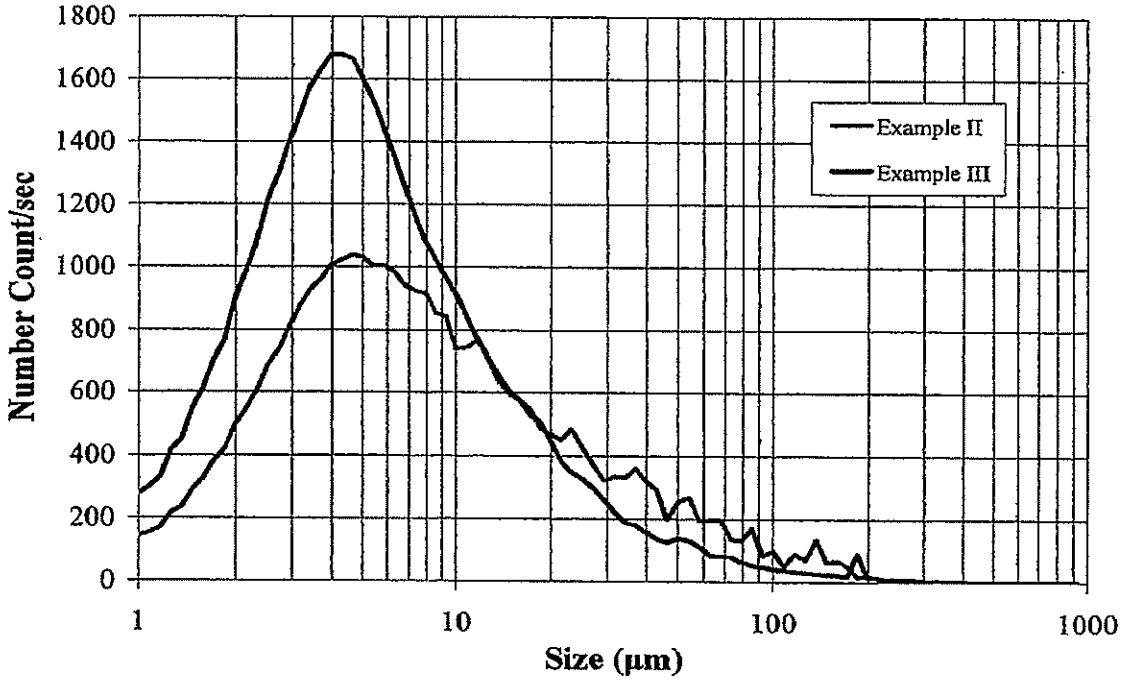

FIGURE 9

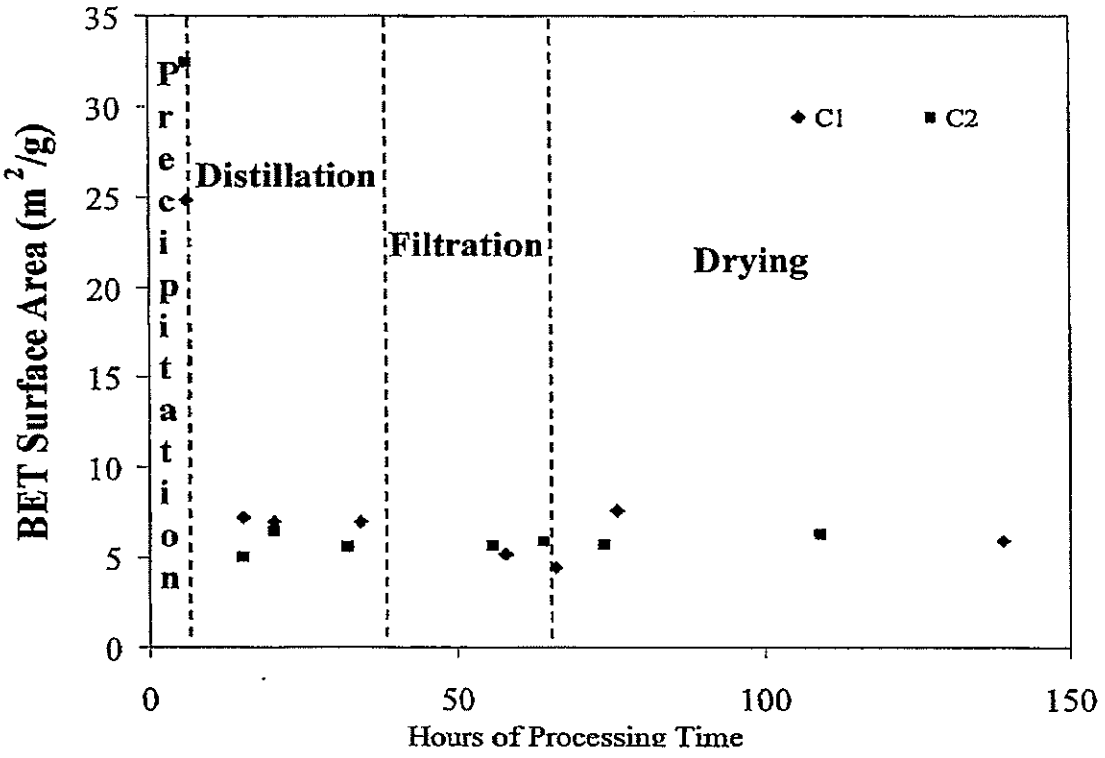

FIGURE 10

