(12) INTERNATIONAL APPLICATION PUBLISHED UNDER THE PATENT COOPERATION TREATY (PCT)

(19) World Intellectual Property Organization
International Bureau

(43) International Publication Date
25 November 2010 (25.11.2010)

PCT

(10) International Publication Number
WO 2010/134887 A3

(51) International Patent Classification:
F21V 21/34 (2006.01) *F21S 2/00* (2006.01)

(21) International Application Number:
PCT/SG2009/000177

(22) International Filing Date:
19 May 2009 (19.05.2009)

(25) Filing Language: English

(26) Publication Language: English

(72) Inventors; and
(71) Applicants : **KOH, Tian Tong** [SG/SG]; Blk 403, Tampines Street 41, #10-79, Singapore 520403 (SG). **LOH, Gin Hong** [SG/SG]; Blk 512, Woodlands Drive 14, #04-91, Singapore 730512 (SG).

(74) Agent: **ALLEN & GLEDHILL LLP**; One Marina Boulevard, #28-00, Singapore 018989 (SG).

(81) Designated States *(unless otherwise indicated, for every kind of national protection available)*: AE, AG, AL, AM, AO, AT, AU, AZ, BA, BB, BG, BH, BR, BW, BY, BZ, CA, CH, CN, CO, CR, CU, CZ, DE, DK, DM, DO, DZ, EC, EE, EG, ES, FI, GB, GD, GE, GH, GM, GT, HN, HR, HU, ID, IL, IN, IS, JP, KE, KG, KM, KN, KP, KR, KZ, LA, LC, LK, LR, LS, LT, LU, LY, MA, MD, ME, MG, MK, MN, MW, MX, MY, MZ, NA, NG, NI, NO, NZ, OM, PG, PH, PL, PT, RO, RS, RU, SC, SD, SE, SG, SK, SL, SM, ST, SV, SY, TJ, TM, TN, TR, TT, TZ, UA, UG, US, UZ, VC, VN, ZA, ZM, ZW.

(84) Designated States *(unless otherwise indicated, for every kind of regional protection available)*: ARIPO (BW, GH, GM, KE, LS, MW, MZ, NA, SD, SL, SZ, TZ, UG, ZM, ZW), Eurasian (AM, AZ, BY, KG, KZ, MD, RU, TJ, TM), European (AT, BE, BG, CH, CY, CZ, DE, DK, EE, ES, FI, FR, GB, GR, HR, HU, IE, IS, IT, LT, LU, LV, MC, MK, MT, NL, NO, PL, PT, RO, SE, SI, SK, TR), OAPI (BF, BJ, CF, CG, CI, CM, GA, GN, GQ, GW, ML, MR, NE, SN, TD, TG).

Published:

— *with international search report (Art. 21(3))*

— *before the expiration of the time limit for amending the claims and to be republished in the event of receipt of amendments (Rule 48.2(h))*

(88) Date of publication of the international search report:
6 January 2011

(54) Title: LIGHTING SYSTEM

Figure 1

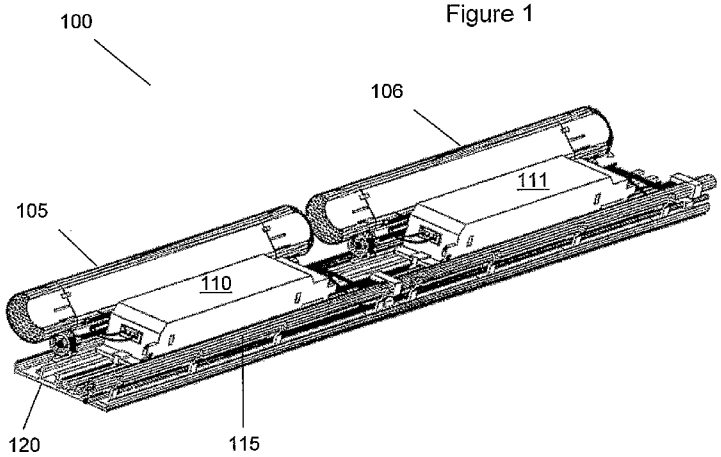

(57) Abstract: A lighting system for affixing lighting fixtures to a surface. The lighting system has a base with a bottom surface resting on a surface of a structure. The top surface includes multiple sets of tracks. A fixture coupling connects a lighting fixture to one of the set of tracks, an electronics coupling connects lighting electronics to one of the set of tracks, and a line coupling connects a power line to one of the sets of tracks.

WO 2010/134887 A3