28/11/03
2003070802

(12) INTERNATIONAL APPLICATION PUBLISHED UNDER THE PATENT COOPERATION TREATY (PCT)

(19) World Intellectual Property Organization
International Bureau

(43) International Publication Date
9 October 2003 (09.10.2003)

PCT

(10) International Publication Number
WO 03/082460 A1

(51) International Patent Classification[7]: B01J 19/00, 19/24, F28F 13/00, 9/20, F28D 9/00, C01B 3/32, 3/38

(21) International Application Number: PCT/JP03/03364

(22) International Filing Date: 19 March 2003 (19.03.2003)

(25) Filing Language: English

(26) Publication Language: English

(30) Priority Data:
2002-094271 29 March 2002 (29.03.2002) JP
2003-069442 14 March 2003 (14.03.2003) JP

(71) Applicant (*for all designated States except US*): CASIO COMPUTER CO., LTD. [JP/JP]; 6-2, Hon-machi 1-chome, Shibuya-ku, Tokyo 151-8543 (JP).

(72) Inventors; and
(75) Inventors/Applicants (*for US only*): YAMAMOTO, Tadao [JP/JP]; 4-24, Kamishakujiiminamicho, Nerima-ku, Tokyo 177-0043 (JP). NAKAMURA, Osamu [JP/JP]; 2-29-5-304, Sakaecho, Kodaira-shi, Tokyo 187-0034 (JP). TAKEYAMA, Keishi [JP/JP]; 5-301, 3-23-1, Shimmeidai, Hamura-shi, Tokyo 205-0023 (JP). TERAZAKI, Tsutomu [JP/JP]; 2224-1, Fussa, Fussa-shi, Tokyo 197-0011 (JP).

(74) Agents: SUZUYE, Takehiko et al.; c/o SUZUYE & SUZUYE, 7-2, Kasumigaseki 3-chome, Chiyoda-ku, Tokyo 100-0013 (JP).

(81) Designated States (*national*): AU, CA, CN, KR, MX, NO, SG, US.

(84) Designated States (*regional*): European patent (BE, CH, DE, ES, FI, FR, GB, IT, NL, SE).

Published:
— *with international search report*
— *before the expiration of the time limit for amending the claims and to be republished in the event of receipt of amendments*

For two-letter codes and other abbreviations, refer to the "Guidance Notes on Codes and Abbreviations" appearing at the beginning of each regular issue of the PCT Gazette.

162162

(54) Title: CHEMICAL REACTION APPARATUS AND POWER SUPPLY SYSTEM

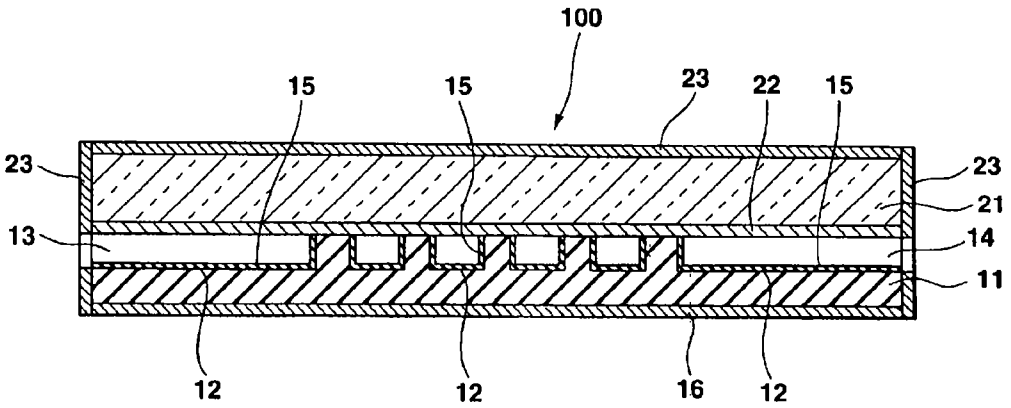

(57) Abstract: A chemical reaction apparatus includes a solid body which has an outer surface, and in which at least one flow path which allows a chemical medium to flow is formed. This body has a heating element which heats the chemical medium in the flow path to accelerate a chemical reaction of the chemical medium, and a heat radiation preventing film which covers at least a portion of the outer surface of the body, and prevents radiation of heat generated by the heating element from a portion of the outer surface.

WO 03/082460 A1

ACTION