FIG.1

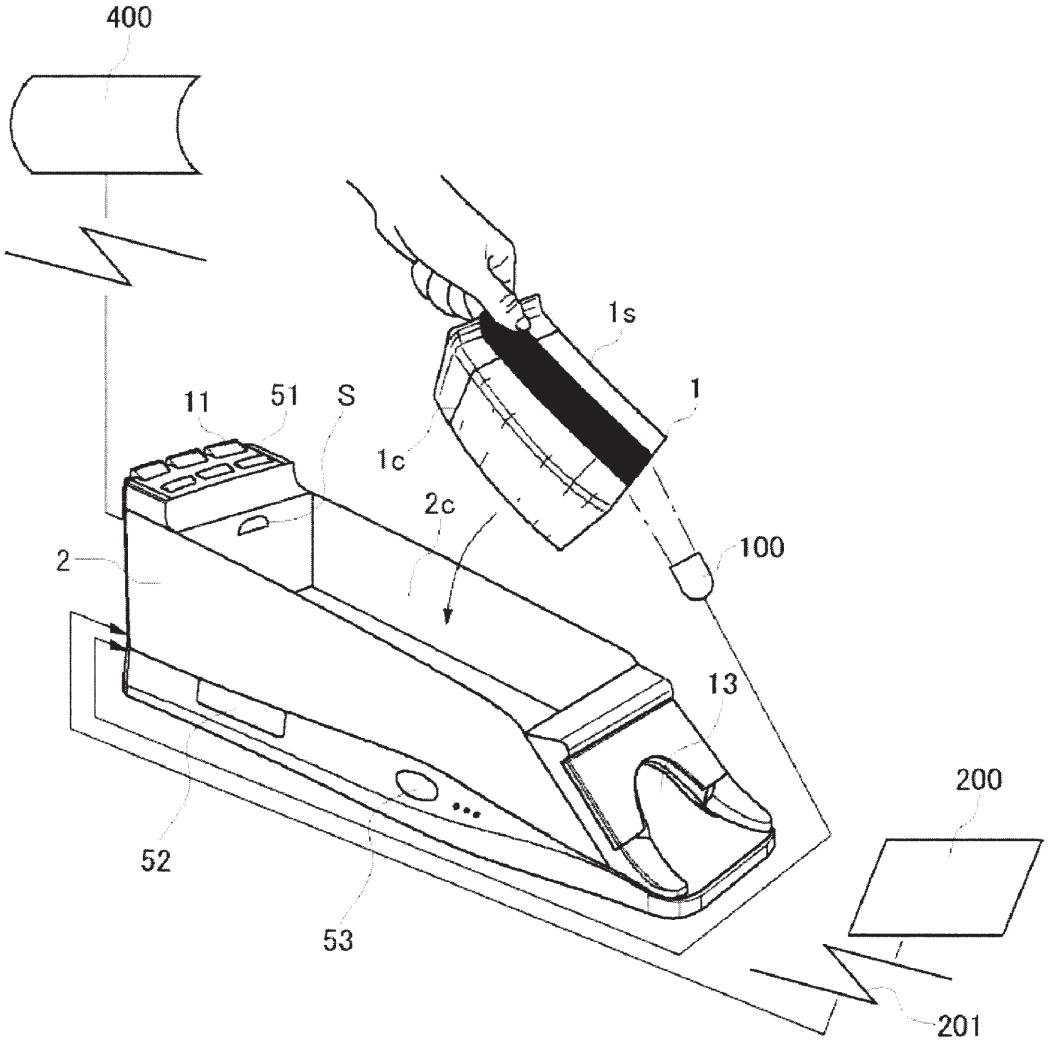

FIG.2

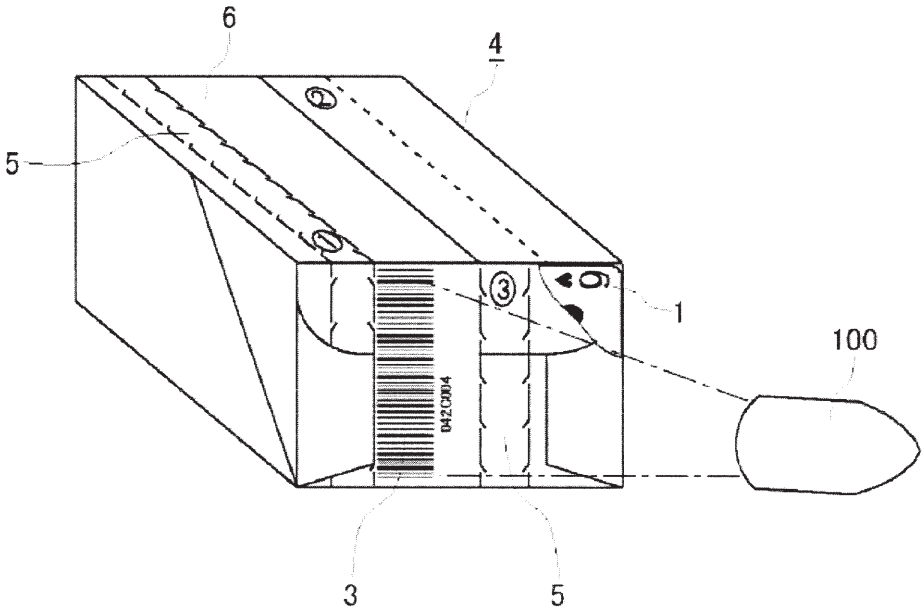

FIG.3

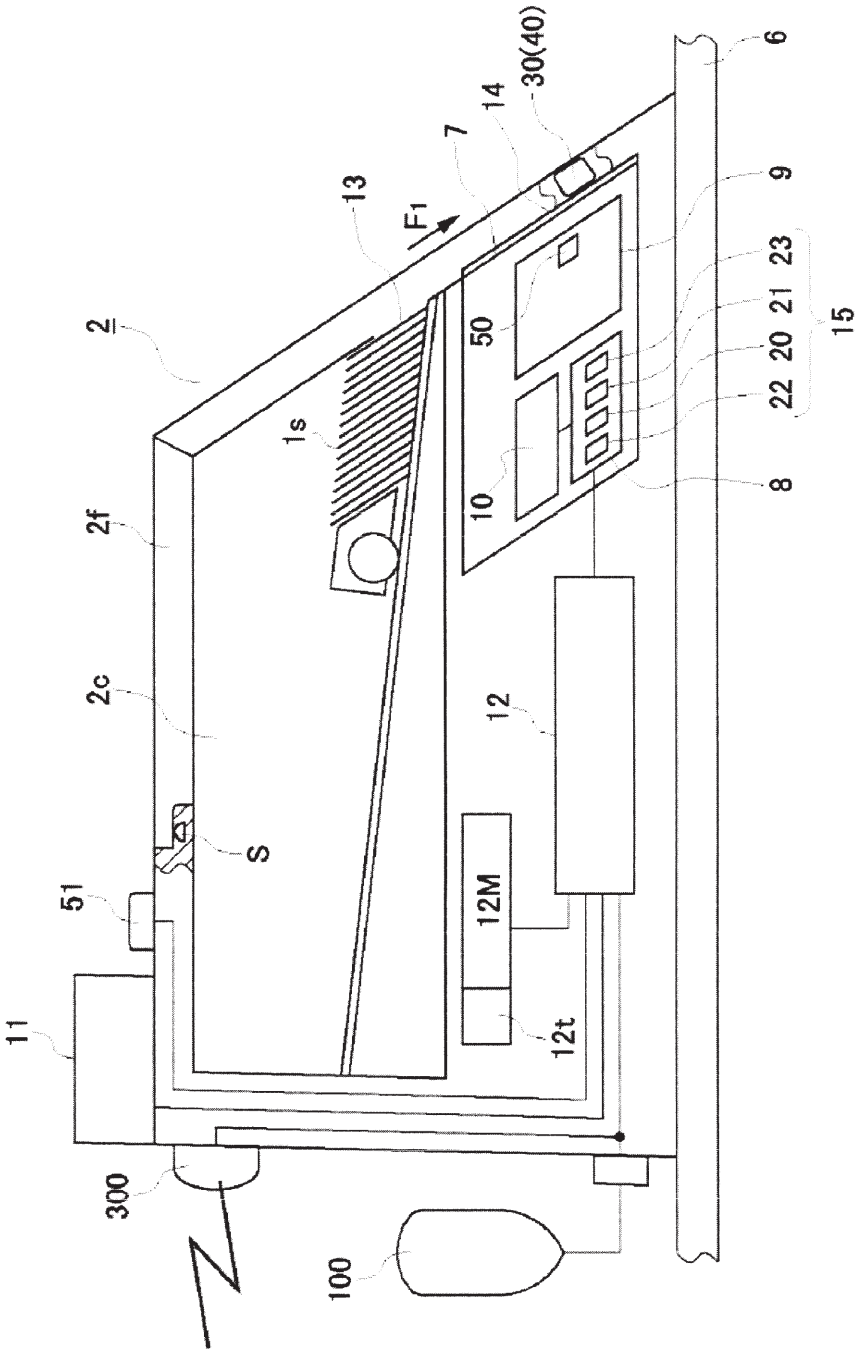
2
1s
2f
2c
S
51
11
300
100
13
F1
7
14
30(40)
6
9
23
21
20
22
15
8
50
10
12
12M
12t

FIG.4

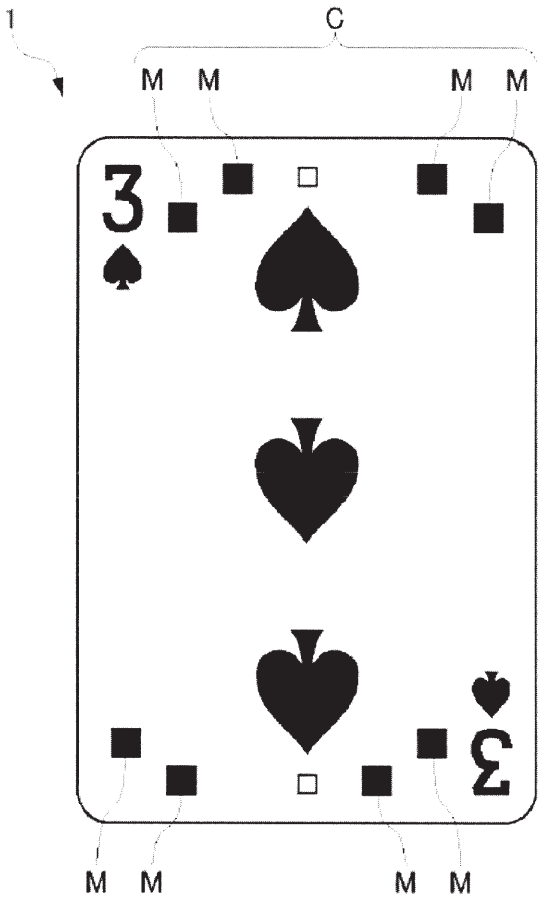

FIG.5

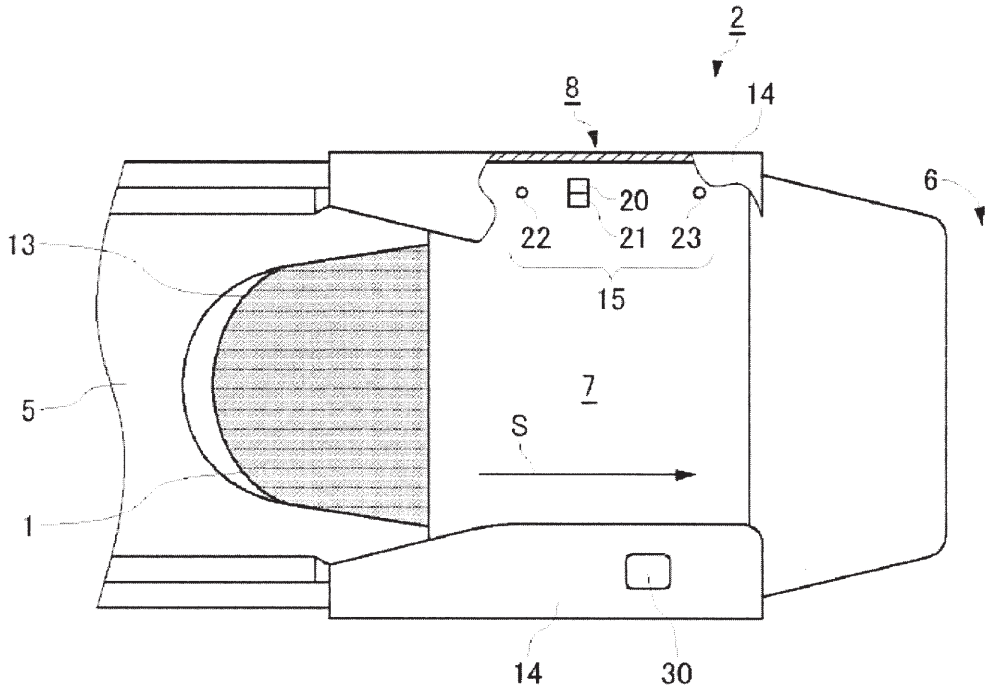

FIG.6

Combination	Arrangement of marking	Outputs of sensors
1	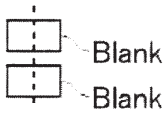	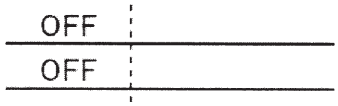
2		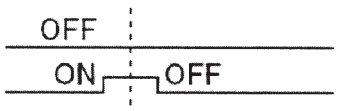
3	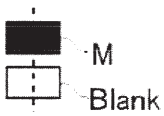	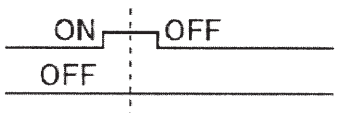
4		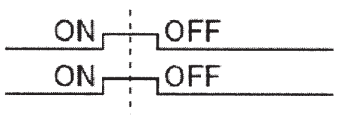

FIG.7

(a)

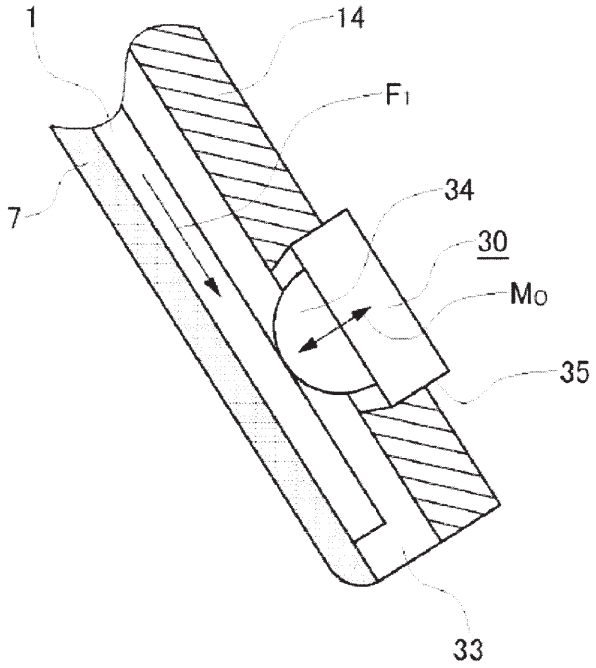

(b)

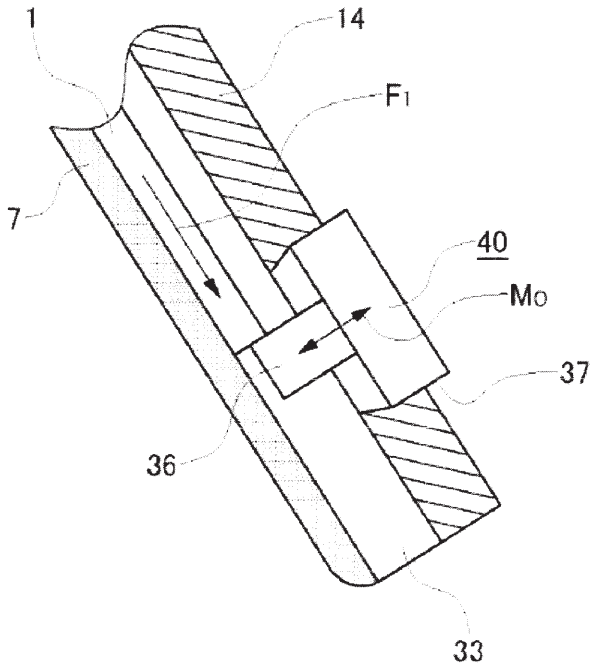

FIG.8

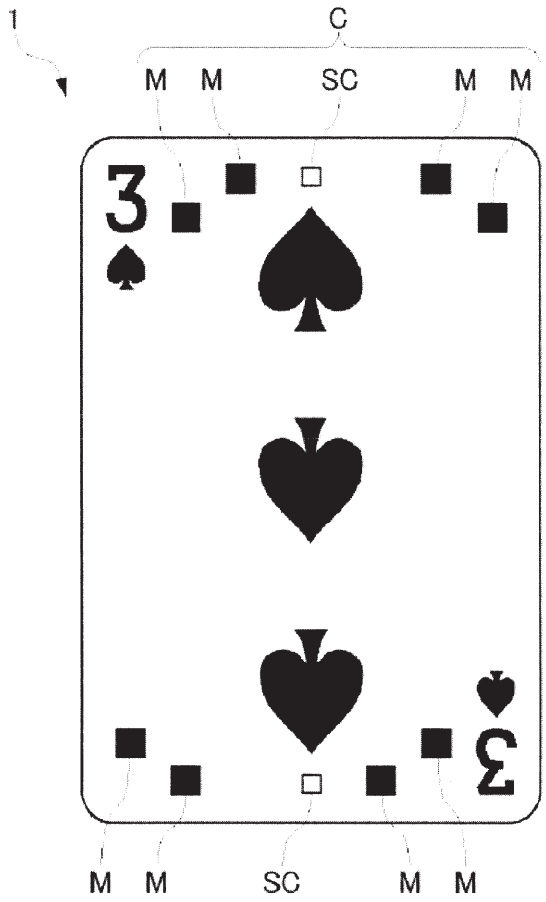

FIG.9

