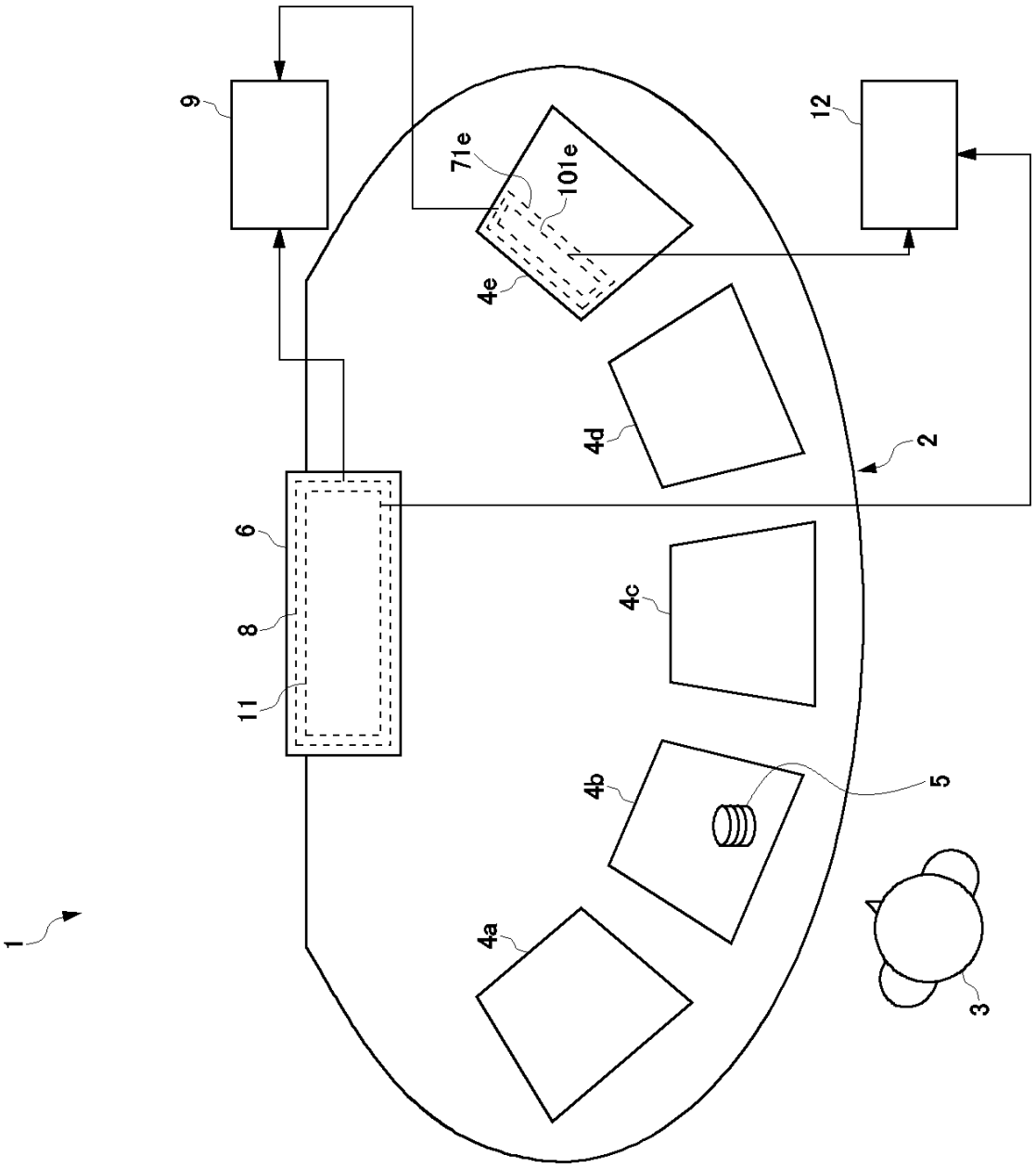

Fig.1

Fig.2

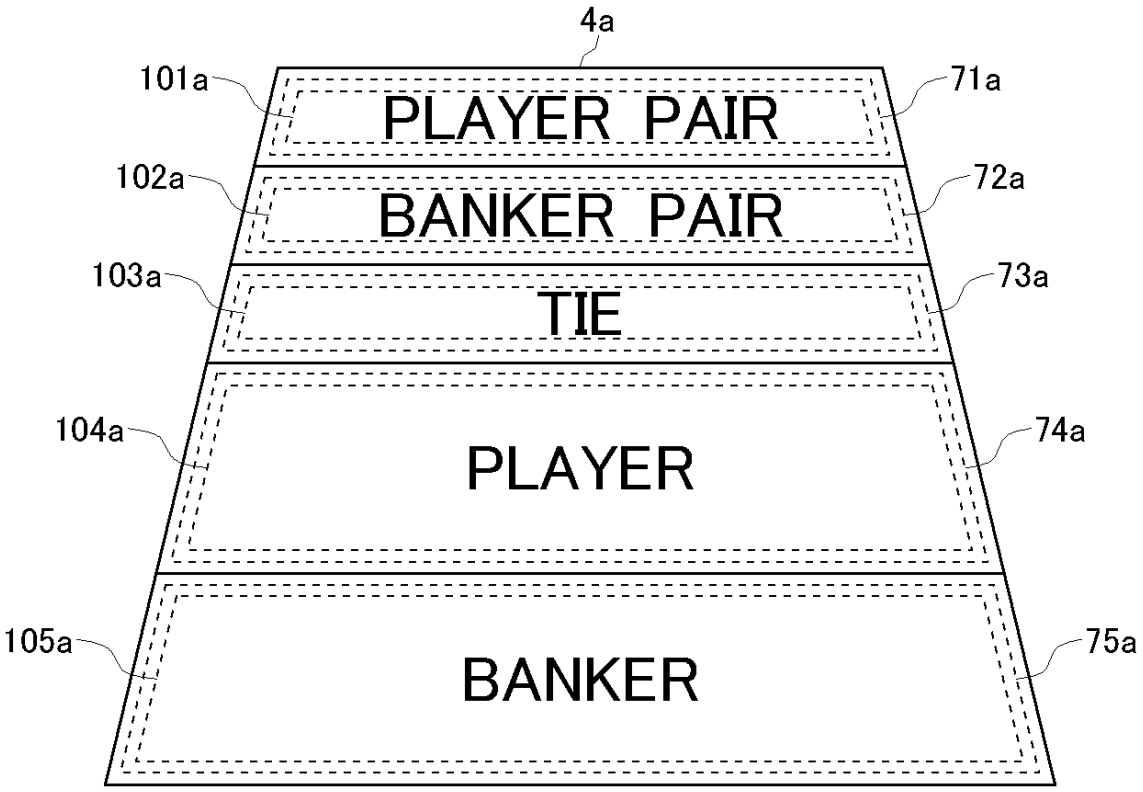
4a
101a
71a
PLAYER PAIR
102a
72a
BANKER PAIR
103a
73a
TIE
104a
74a
PLAYER
105a
75a
BANKER

Fig.3

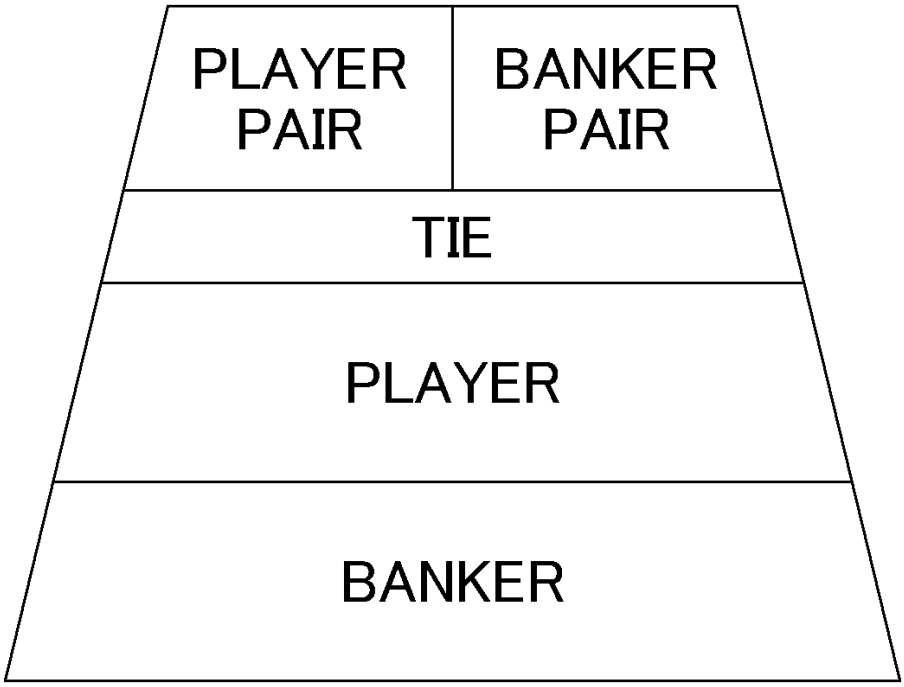

Fig.4

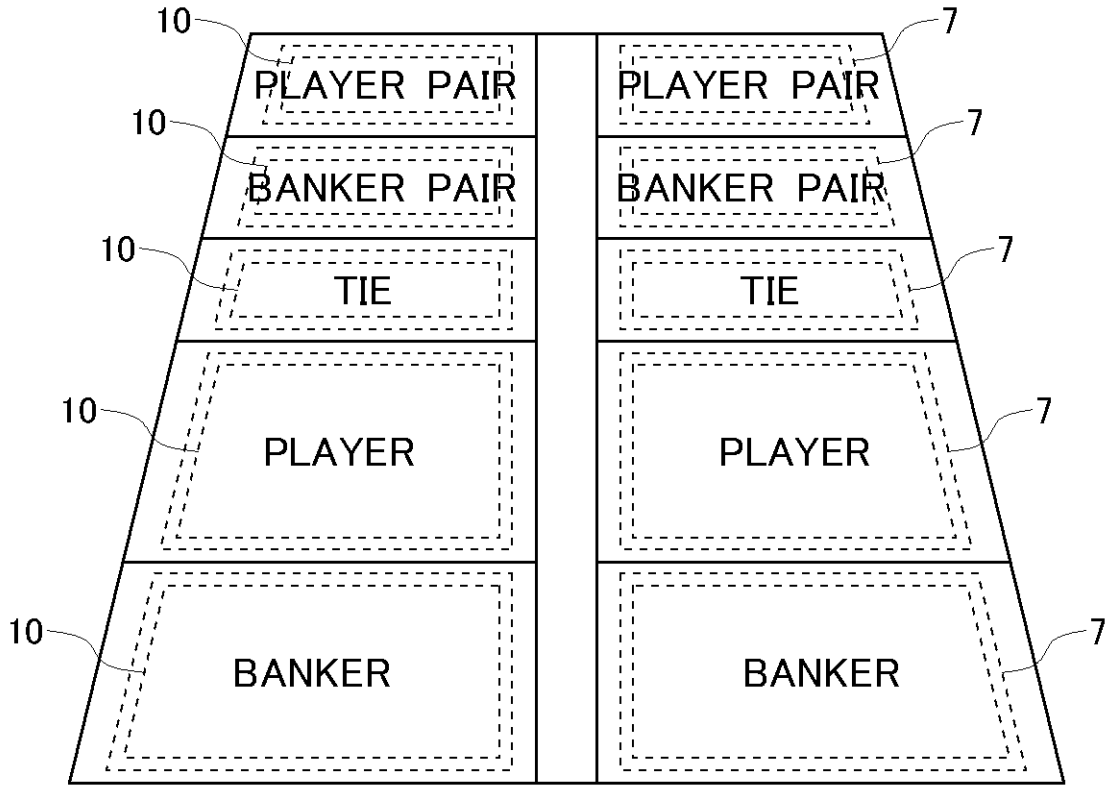
10
7
PLAYER PAIR
PLAYER PAIR
10
7
BANKER PAIR
BANKER PAIR
10
7
TIE
TIE
10
7
PLAYER
PLAYER
10
7
BANKER
BANKER

Fig.5

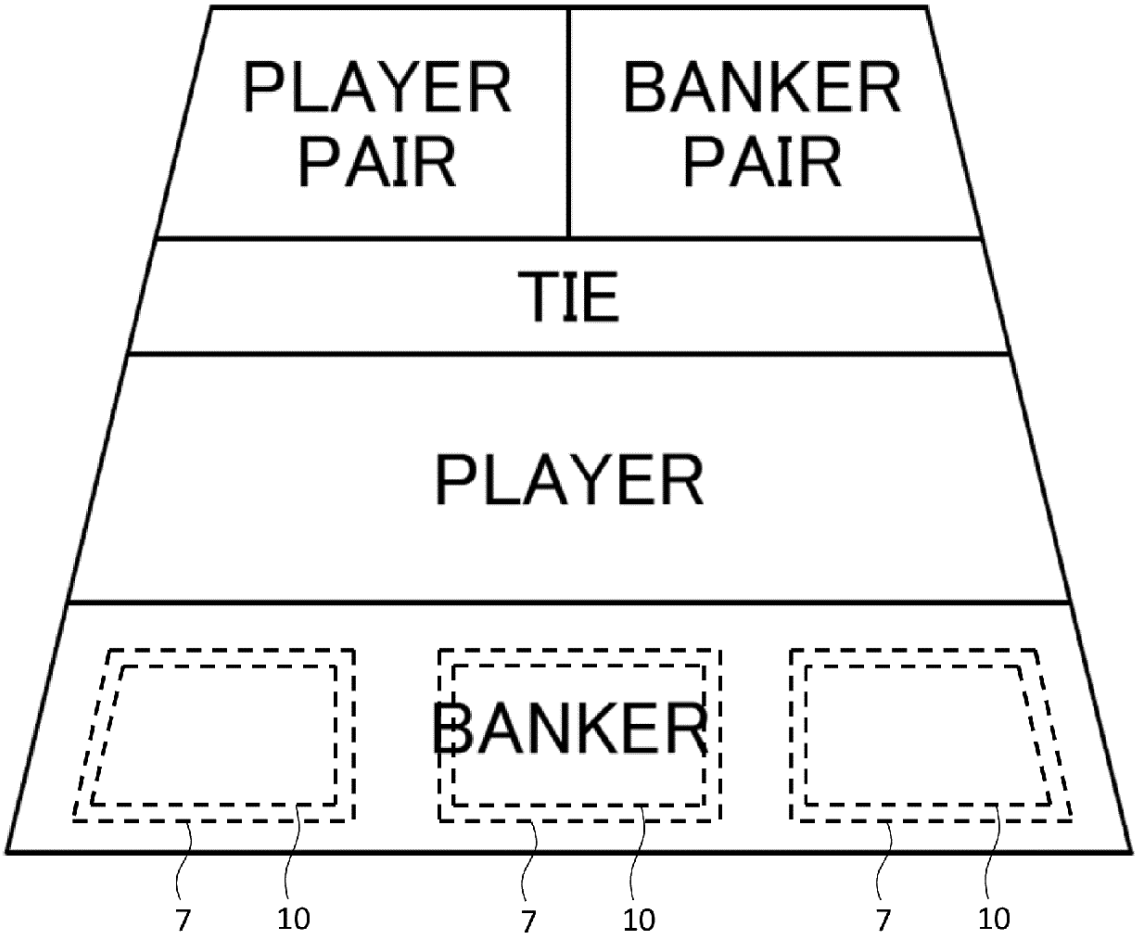

Fig.6

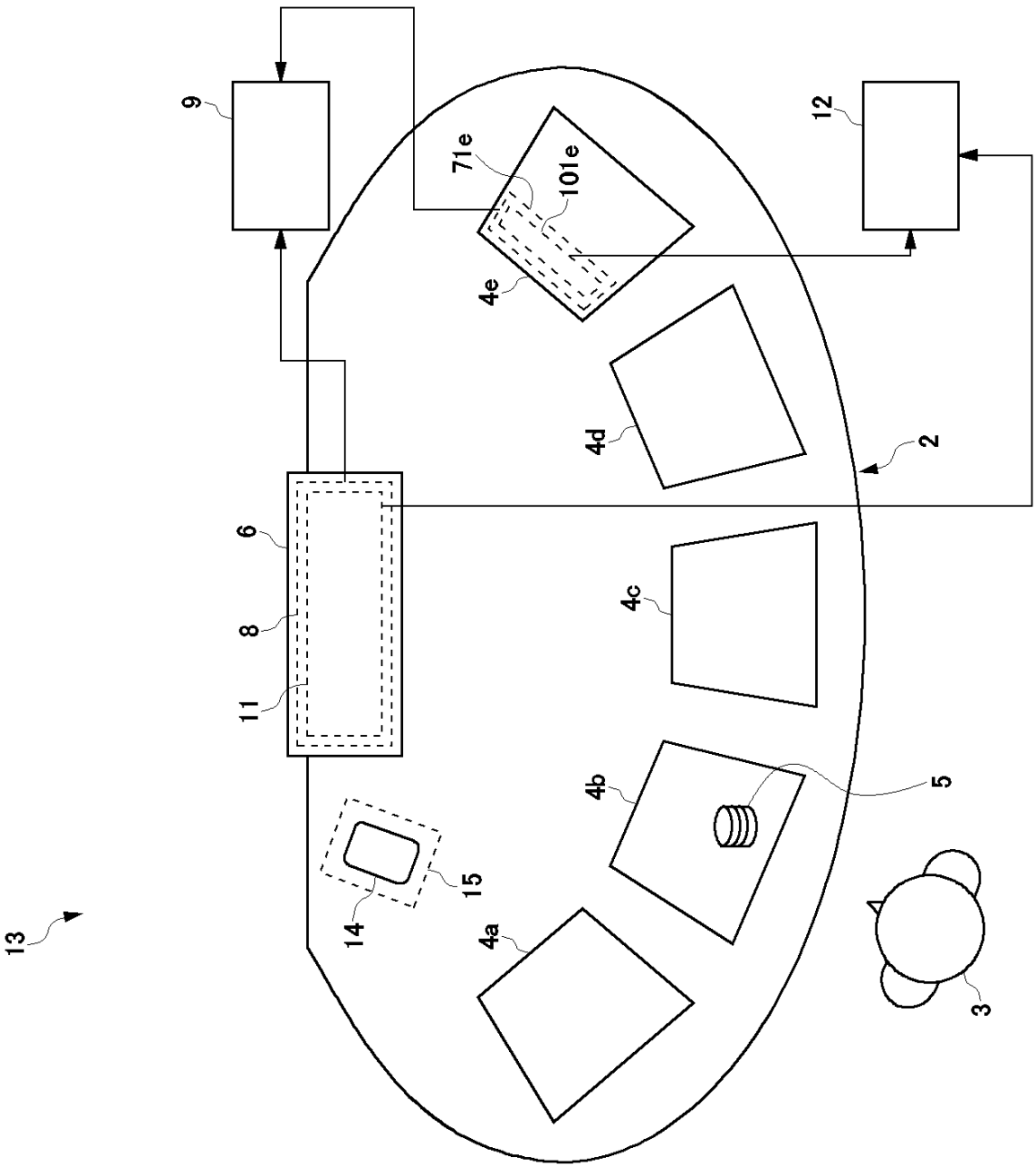

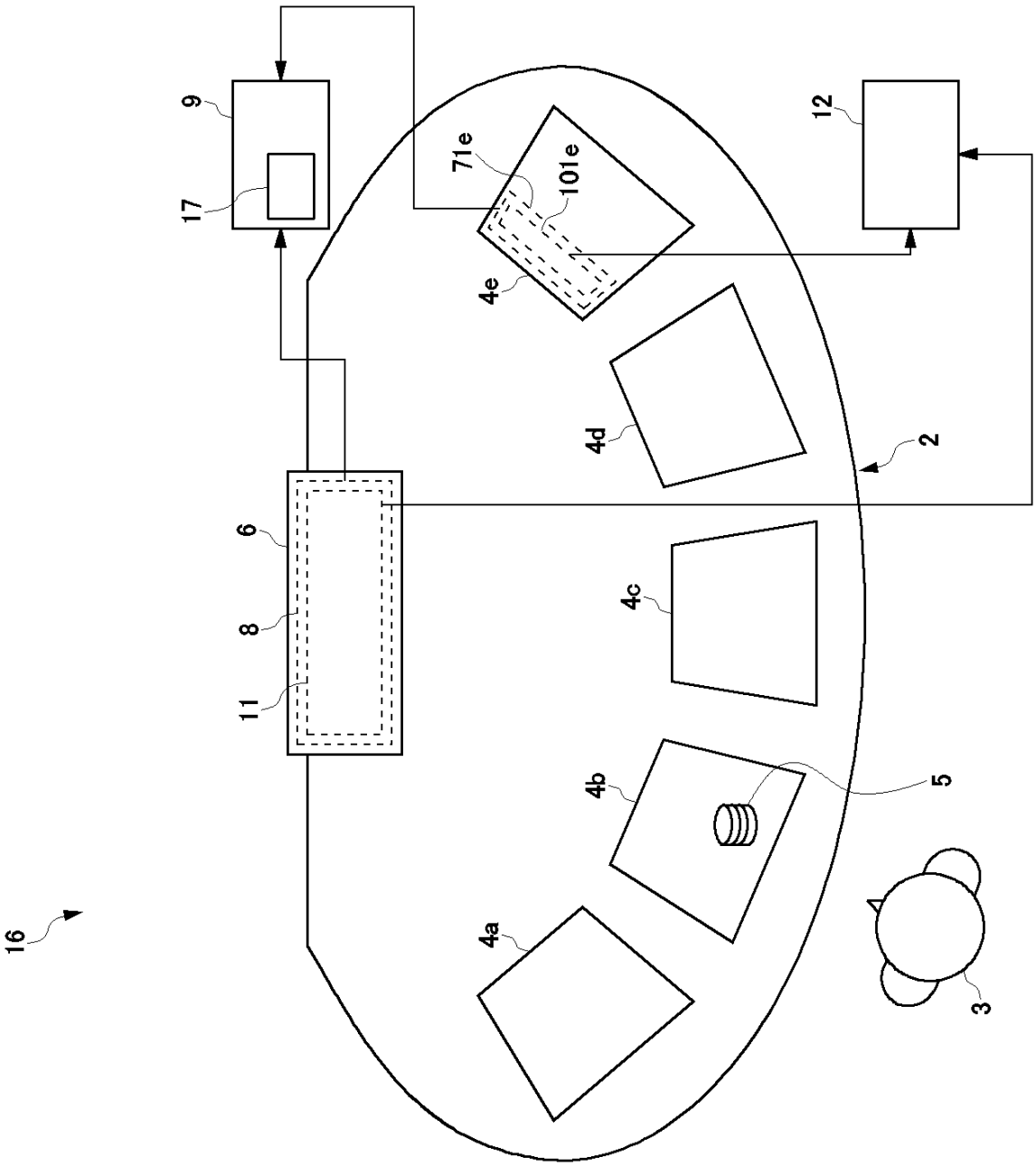

Fig.7

Fig.8

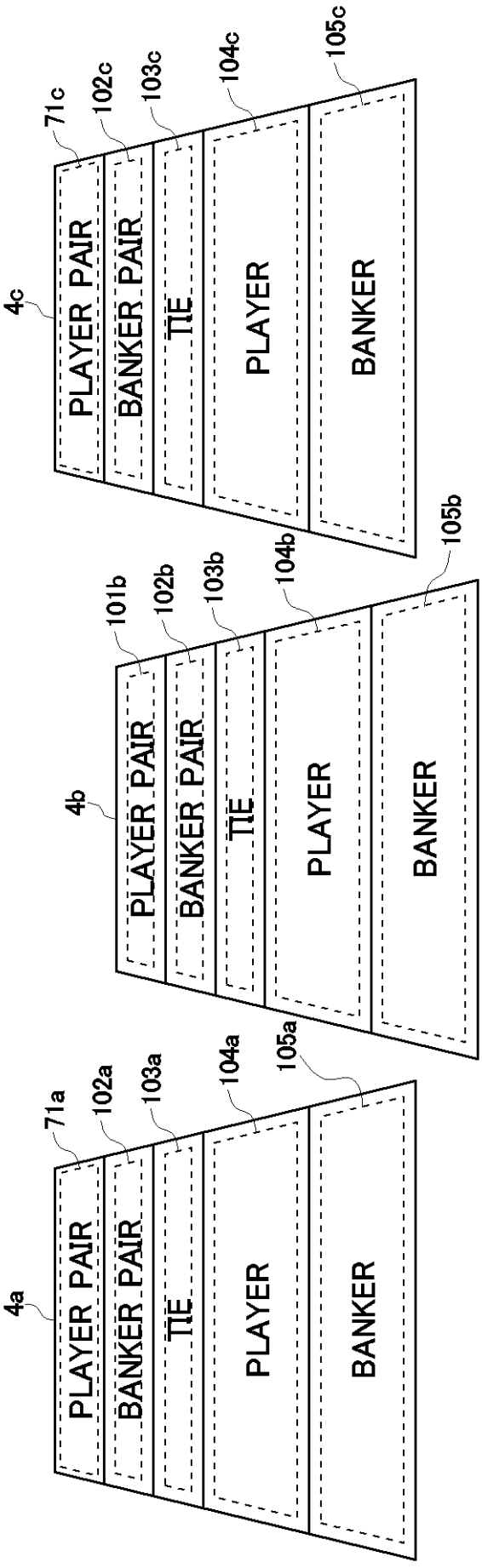
4a
PLAYER PAIR
BANKER PAIR
TIE
PLAYER
BANKER
71a
102a
103a
104a
105a
4b
PLAYER PAIR
BANKER PAIR
TIE
PLAYER
BANKER
101b
102b
103b
104b
105b
4c
PLAYER PAIR
BANKER PAIR
TIE
PLAYER
BANKER
71c
102c
103c
104c
105c

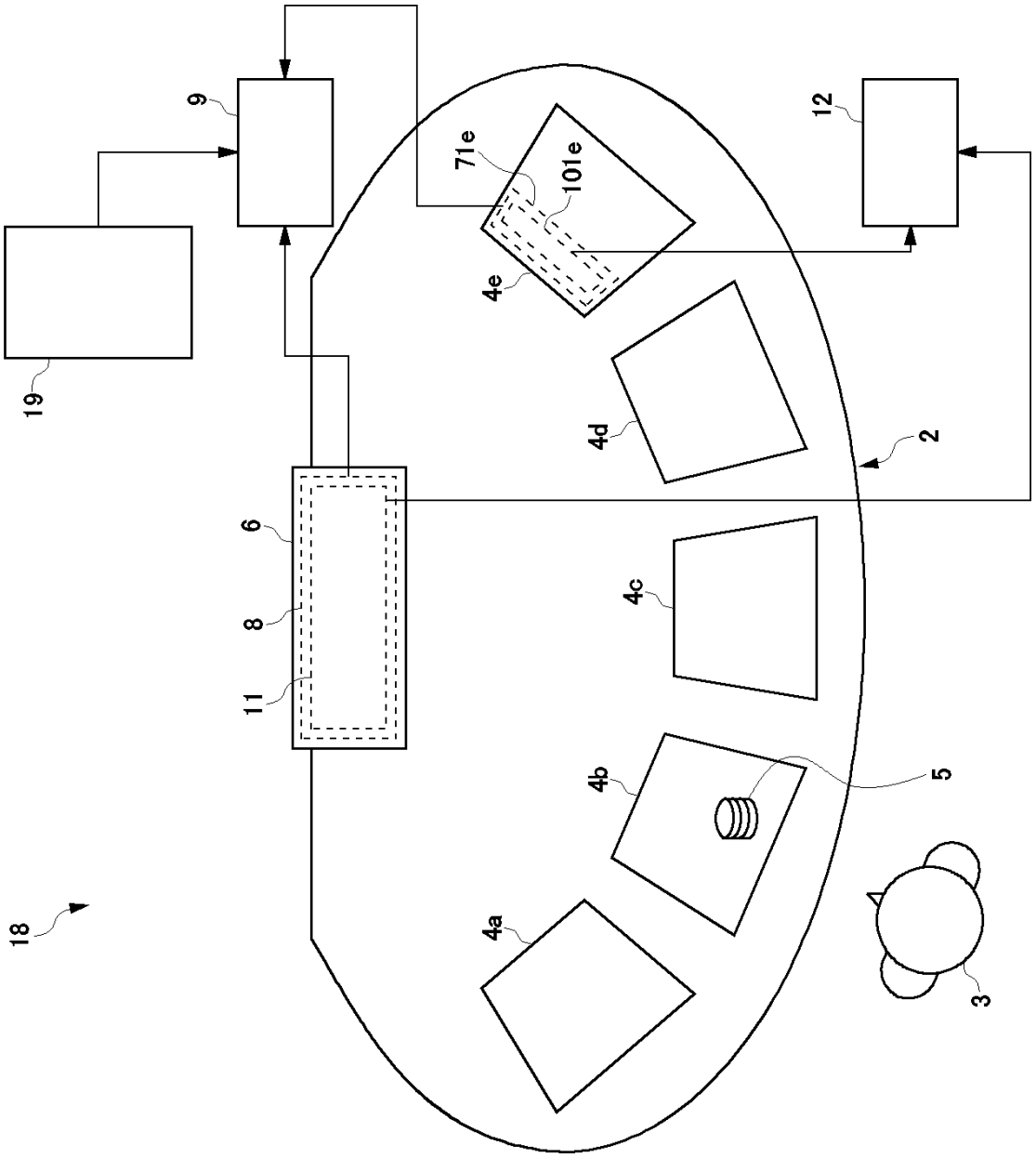

Fig.9

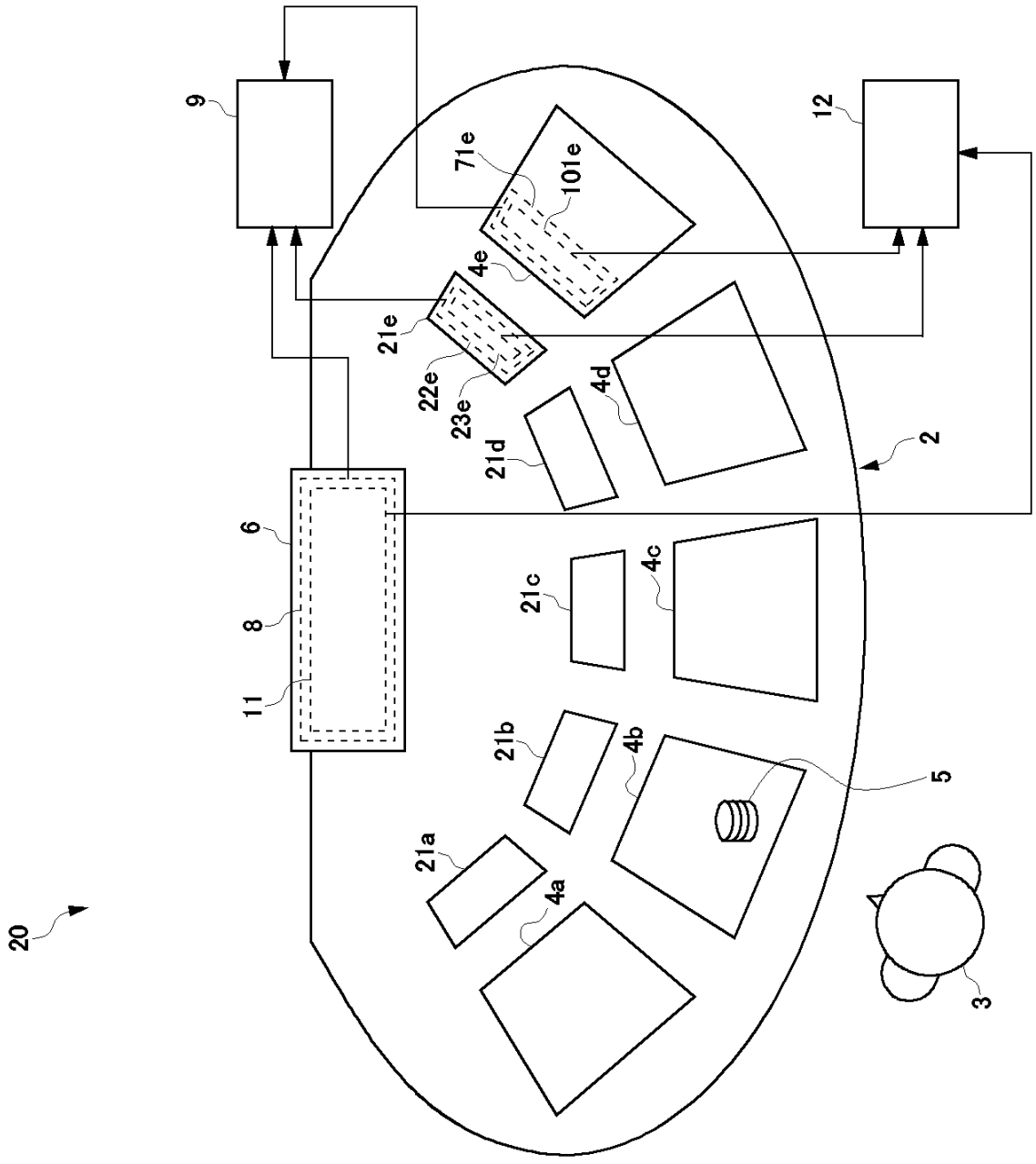
20
9
12
71e
101e
4e
21e
22e
23e
4d
21d
2
6
8
11
21c
4c
21b
4b
5
21a
4a
3

Fig.10

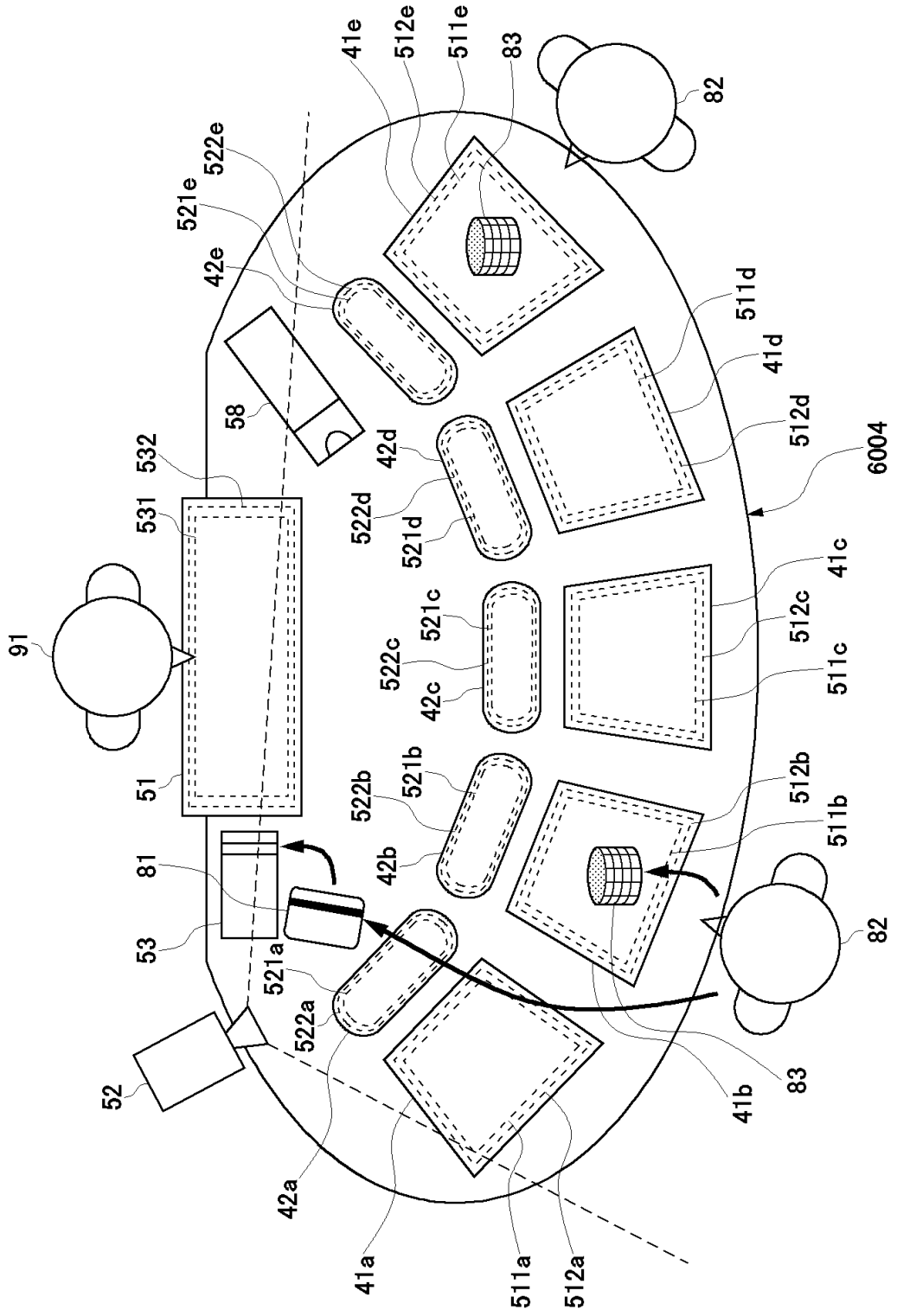
41e
512e
511e
83
82
522e
521e
42e
58
532
531
91
51
81
53
52
42a
41a
511a
512a
521a
522a
522b
521b
42b
522c
521c
42c
522d
521d
42d
511d
41d
512d
6004
41c
512c
511c
512b
511b
41b
83
82

Fig.11

Fig.12

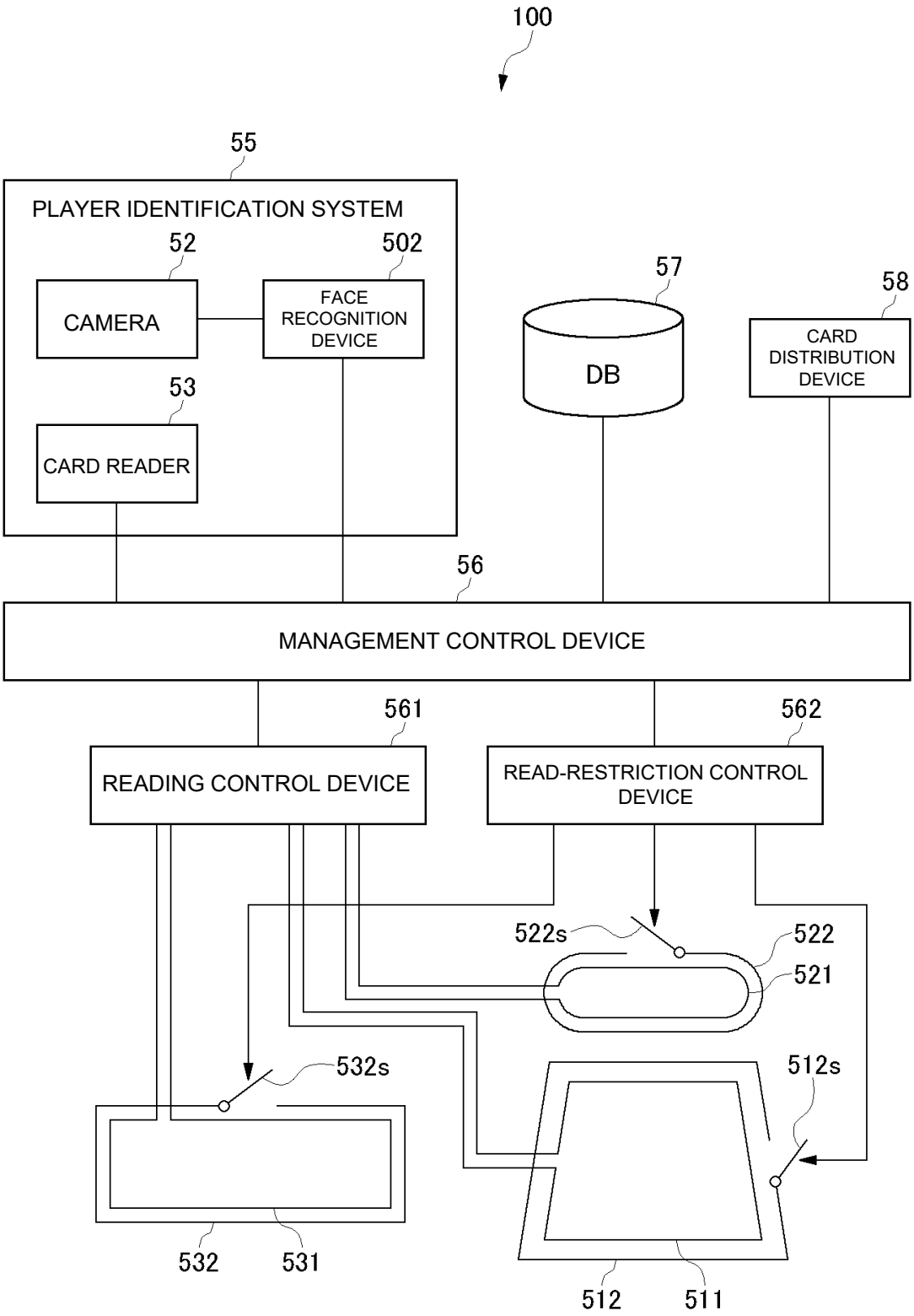
100
55
PLAYER IDENTIFICATION SYSTEM
52
502
CAMERA
FACE RECOGNITION DEVICE
53
CARD READER
57
DB
58
CARD DISTRIBUTION DEVICE
56
MANAGEMENT CONTROL DEVICE
561
READING CONTROL DEVICE
562
READ-RESTRICTION CONTROL DEVICE
522s
522
521
532s
512s
532
531
512
511

Fig.13

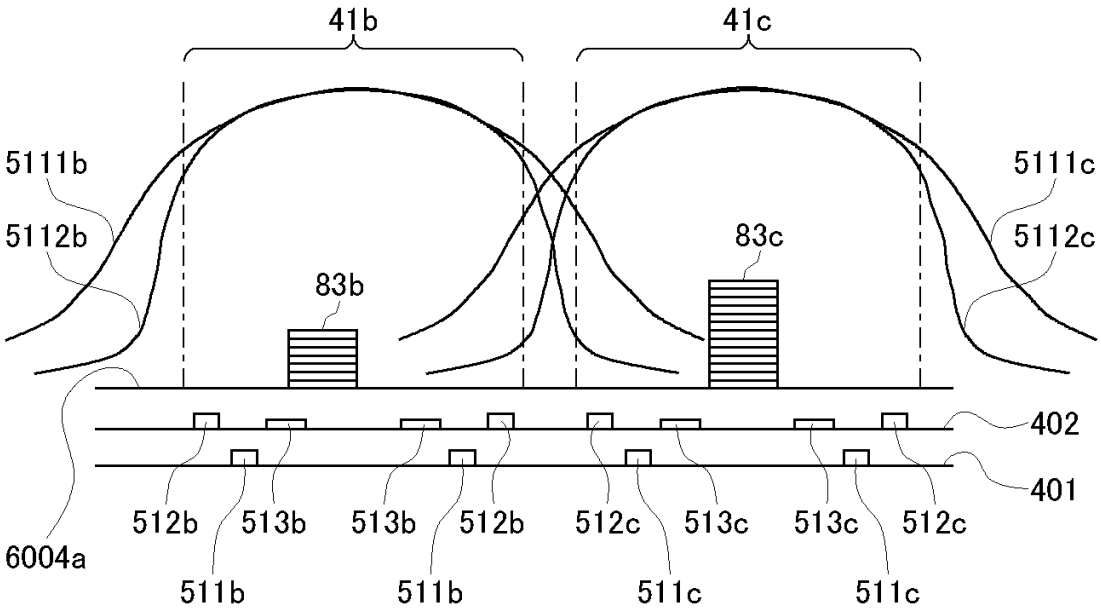
41b
41c
5111b
5112b
5111c
5112c
83b
83c
402
401
512b
513b
513b
512b
512c
513c
513c
512c
6004a
511b
511b
511c
511c

Fig.14

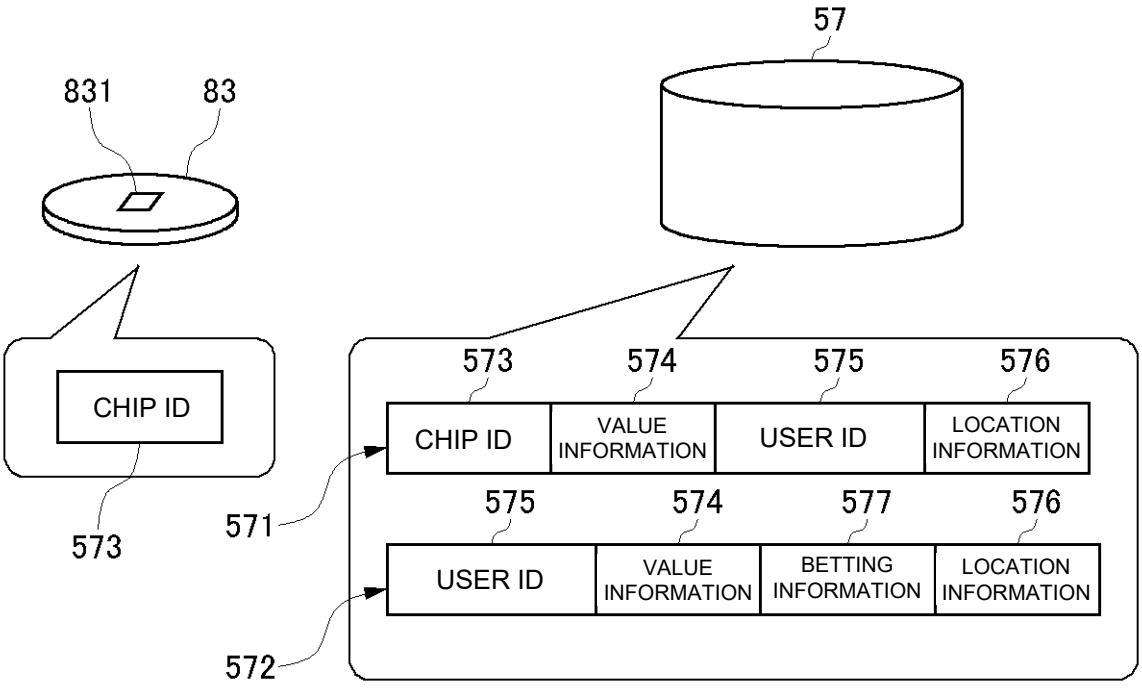
57
831
83
CHIP ID
573
571
572
573
574
575
576
CHIP ID
VALUE INFORMATION
USER ID
LOCATION INFORMATION
575
574
577
576
USER ID
VALUE INFORMATION
BETTING INFORMATION
LOCATION INFORMATION

Fig.15

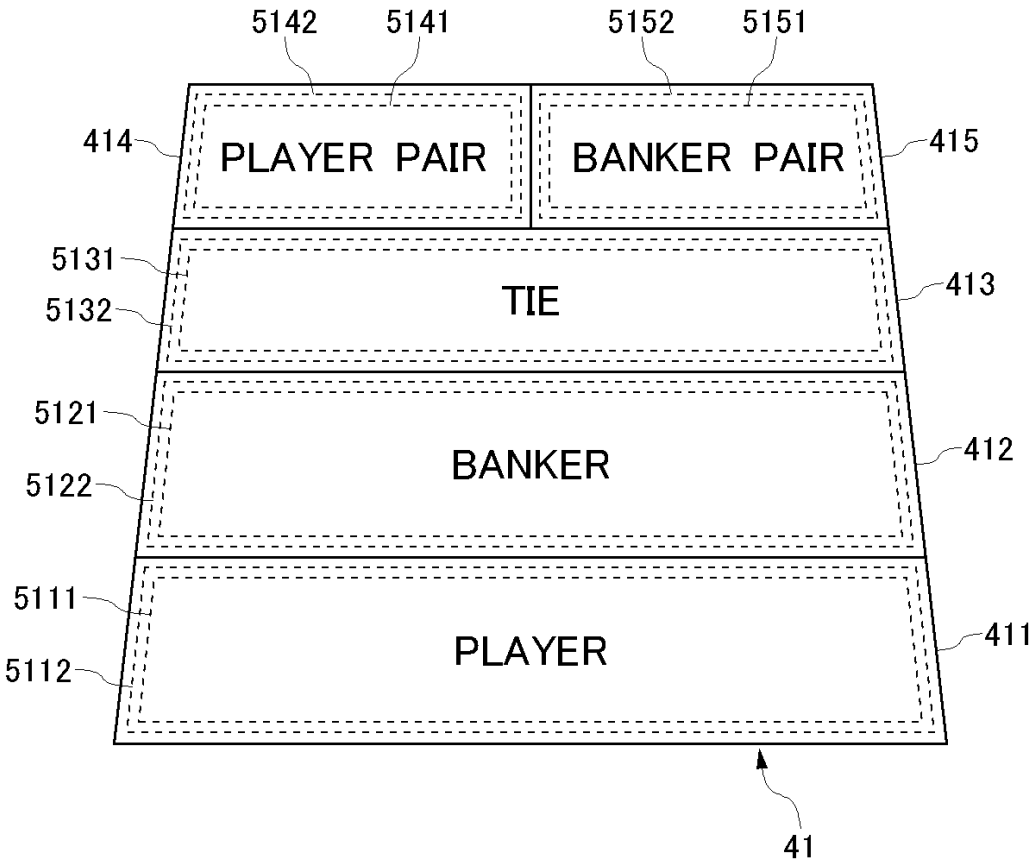
5142
5141
5152
5151
414
PLAYER PAIR
BANKER PAIR
415
5131
5132
TIE
413
5121
5122
BANKER
412
5111
5112
PLAYER
411
41

Fig.16

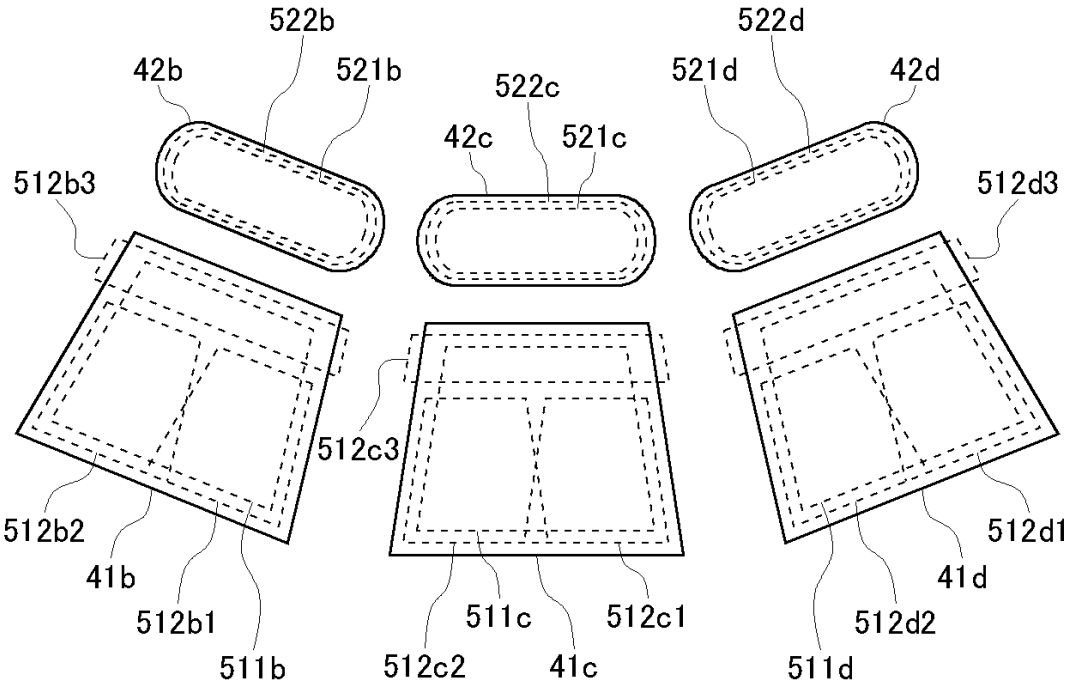
522b
42b
521b
522c
42c
521c
522d
521d
42d
512b3
512d3
512c3
512b2
41b
512b1
511b
512c2
511c
41c
512c1
511d
512d2
41d
512d1

Fig.17A

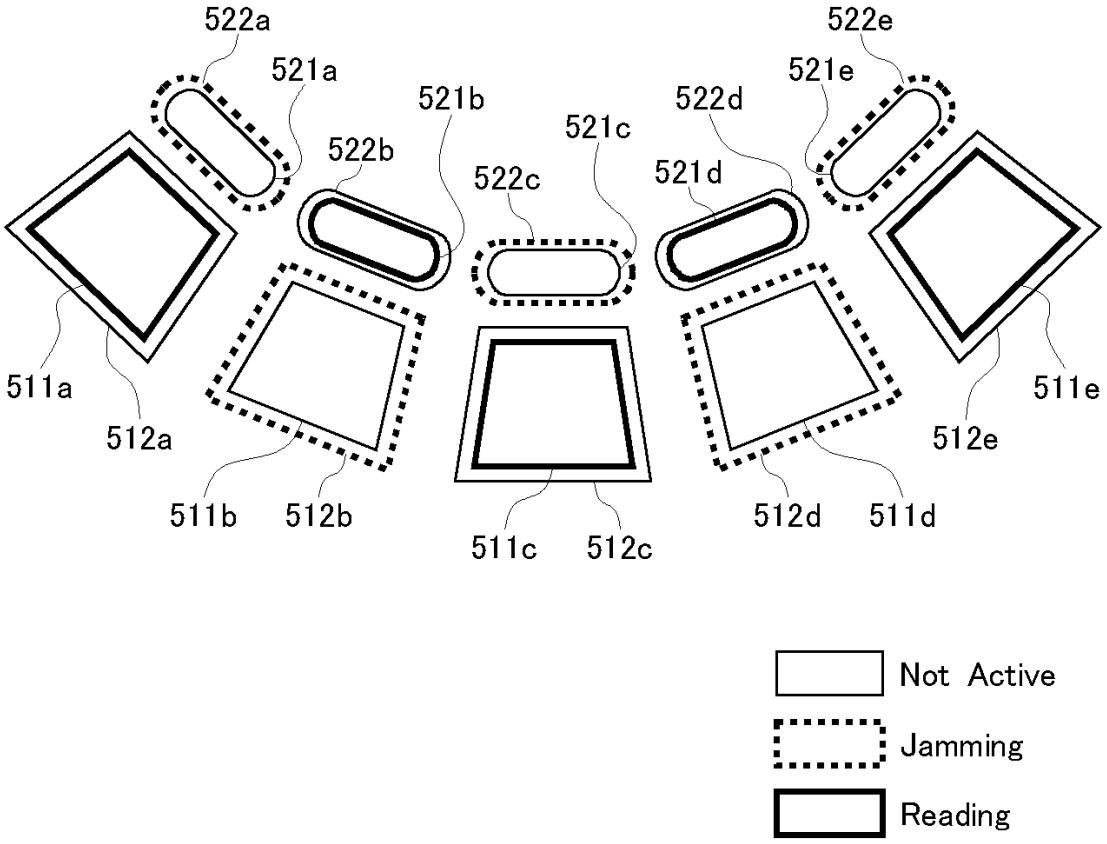
522a
521a
521b
522b
522c
521c
522d
521d
522e
521e
511a
512a
511b
512b
511c
512c
512d
511d
512e
511e
Not Active
Jamming
Reading

Fig.17B

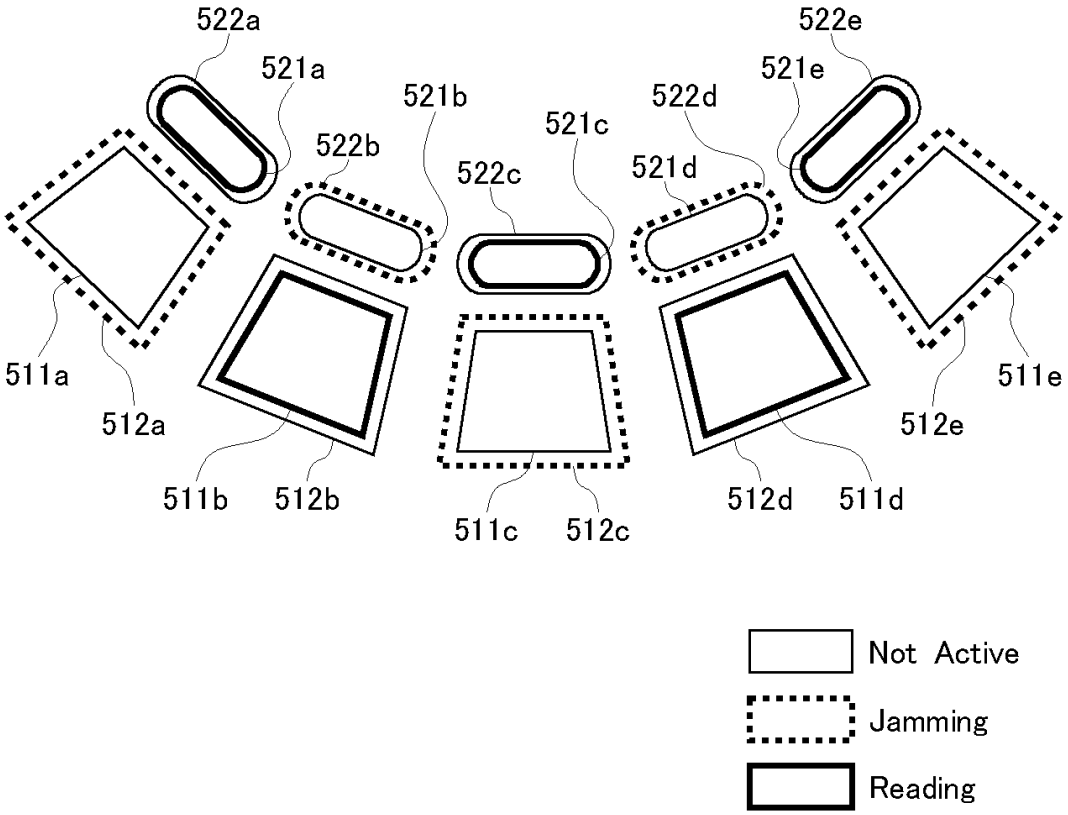
522a
521a
521b
522b
521c
522c
521d
522d
521e
522e
511a
512a
511b
512b
511c
512c
512d
511d
512e
511e
Not Active
Jamming
Reading

Fig.18A

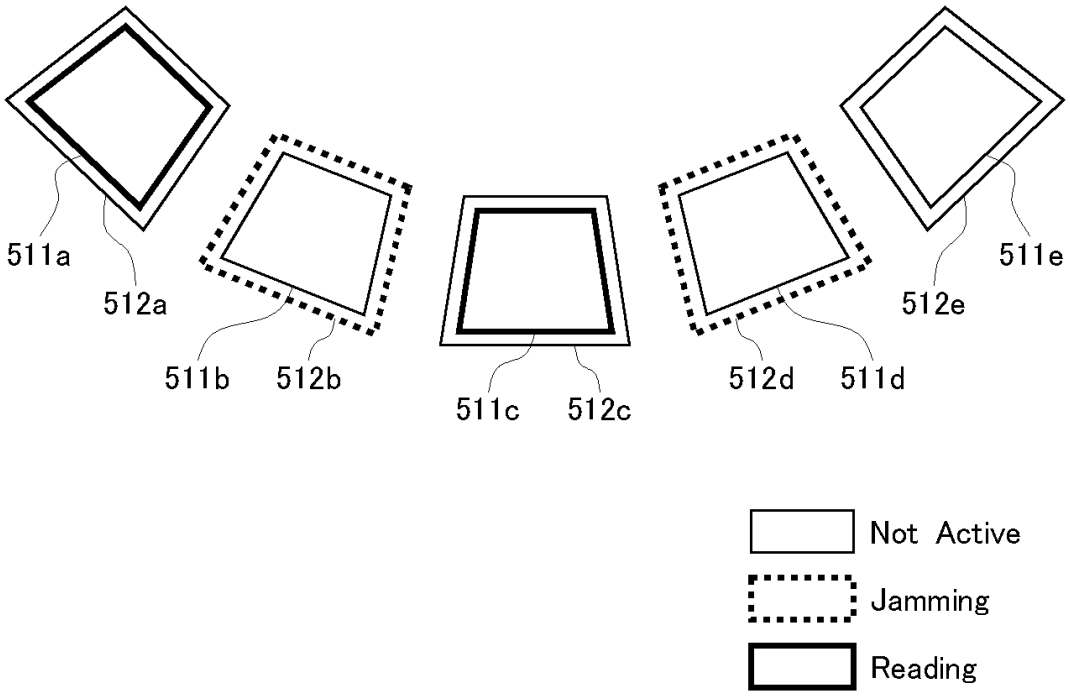
511a
512a
511b
512b
511c
512c
512d
511d
512e
511e
Not Active
Jamming
Reading

Fig.18B

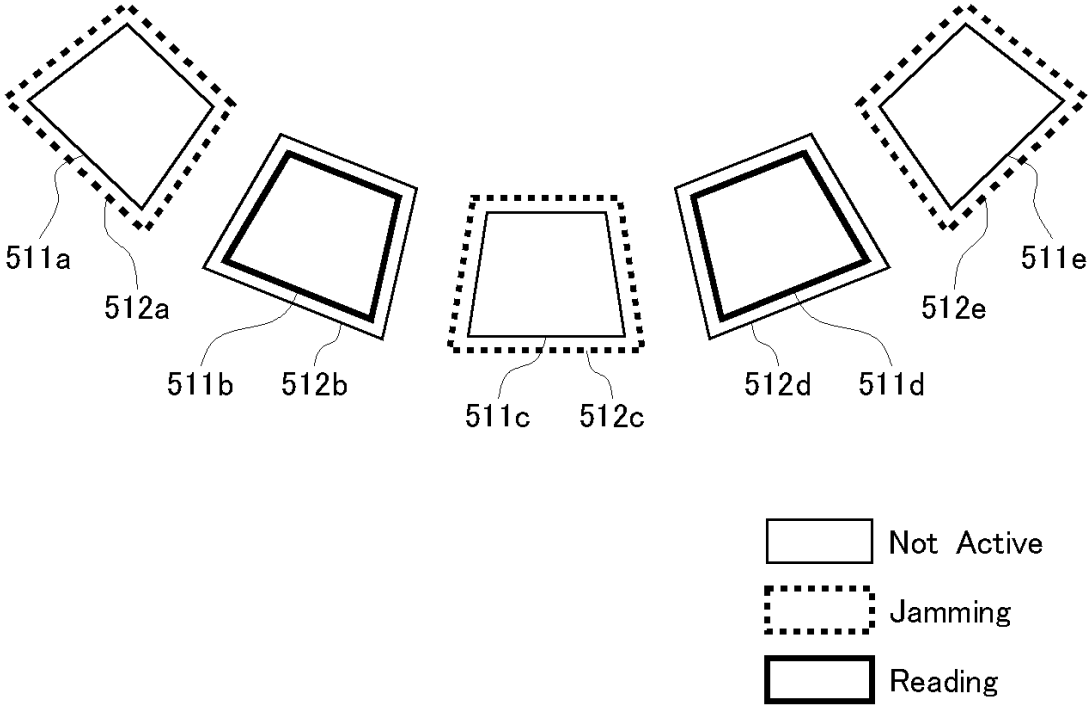
511a
512a
511b
512b
511c
512c
512d
511d
512e
511e
Not Active
Jamming
Reading

Fig.18C

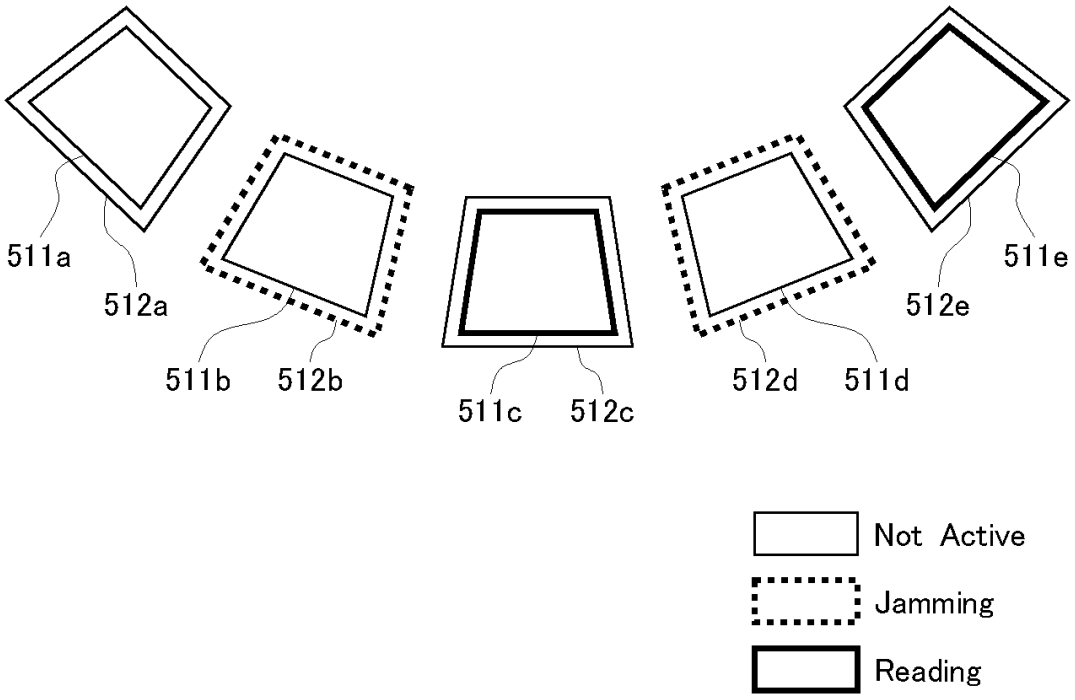
511a
512a
511b
512b
511c
512c
512d
511d
512e
511e
Not Active
Jamming
Reading

Fig.18D

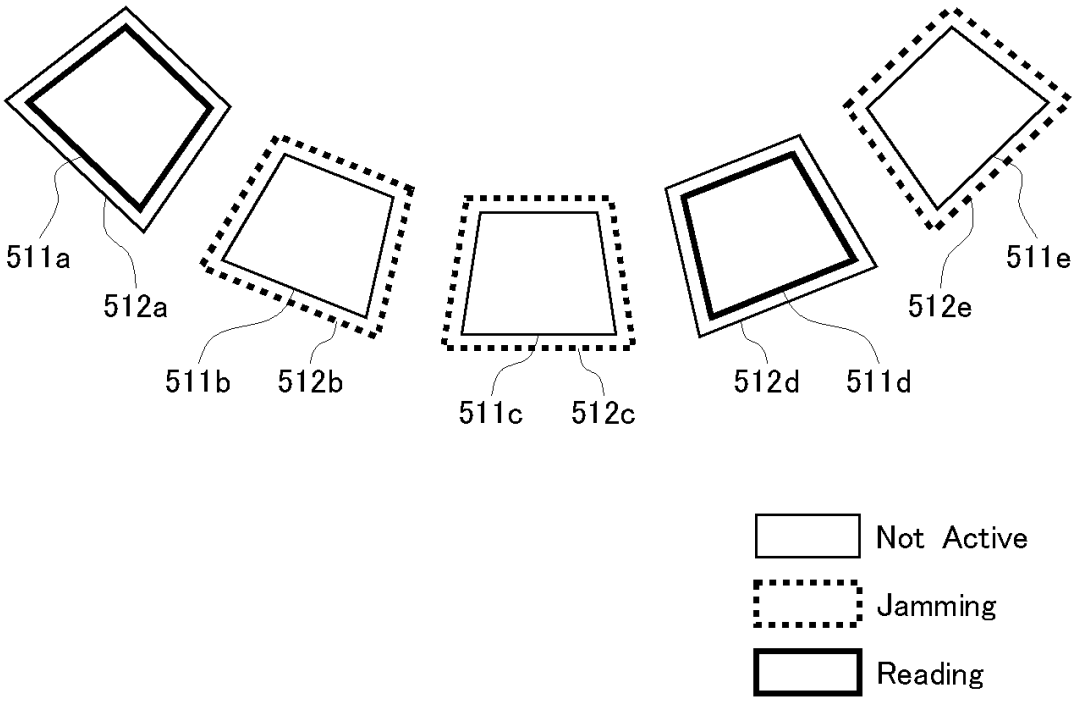
511a
512a
511b
512b
511c
512c
512d
511d
512e
511e
Not Active
Jamming
Reading

Fig.18E

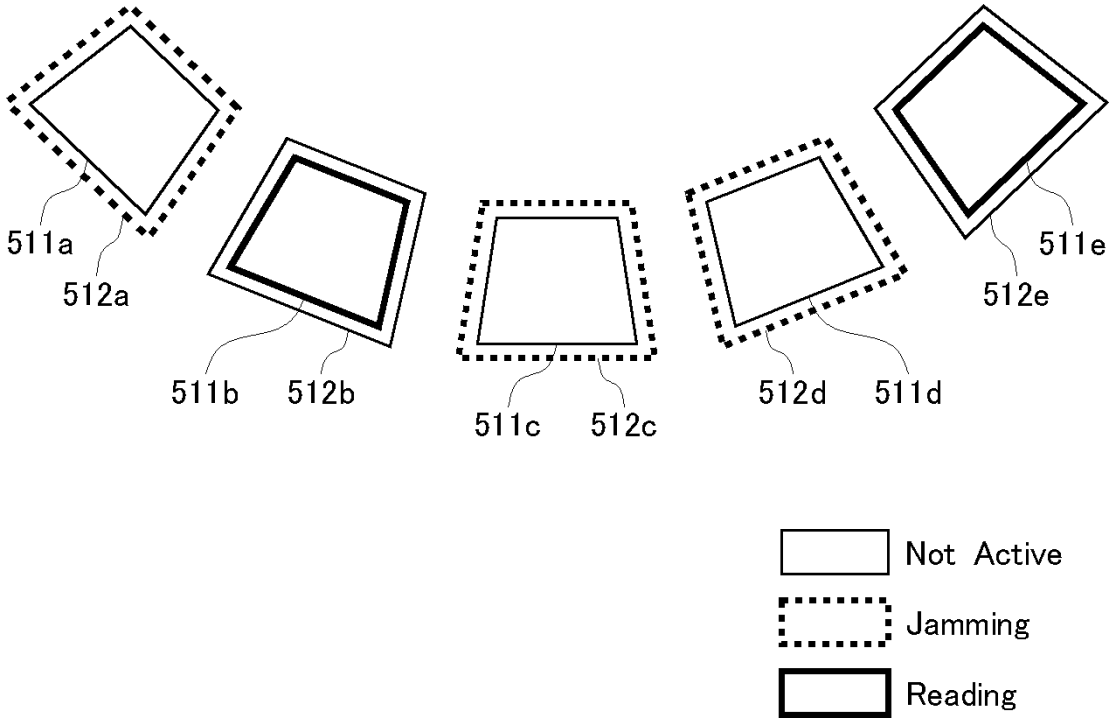
511a
512a
511b
512b
511c
512c
512d
511d
511e
512e
Not Active
Jamming
Reading

Fig.19

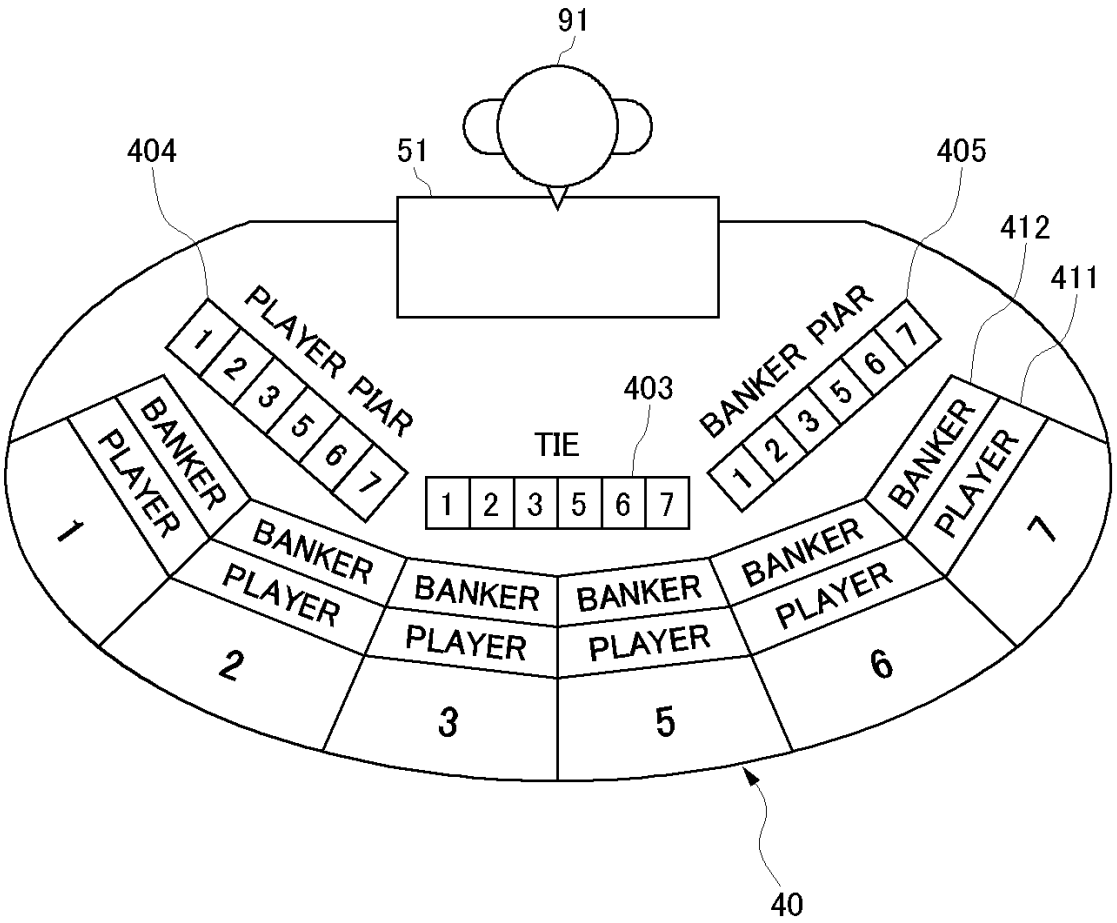
91
404
51
405
412
411
PLAYER PIAR
1 2 3 5 6 7
BANKER PIAR
1 2 3 5 6 7
403
TIE
1 2 3 5 6 7
BANKER
PLAYER
1
2
3
5
6
7
40

Fig.20

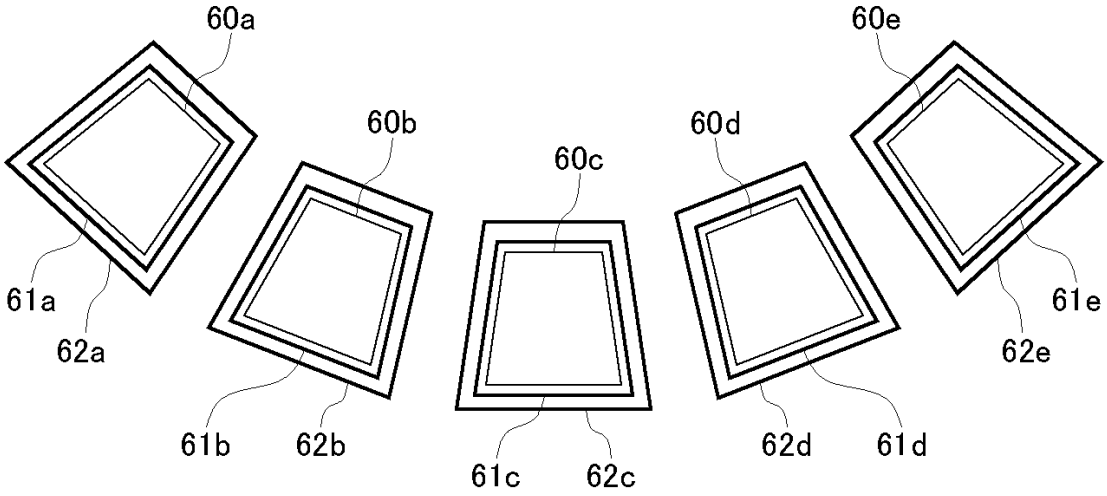

Fig.21

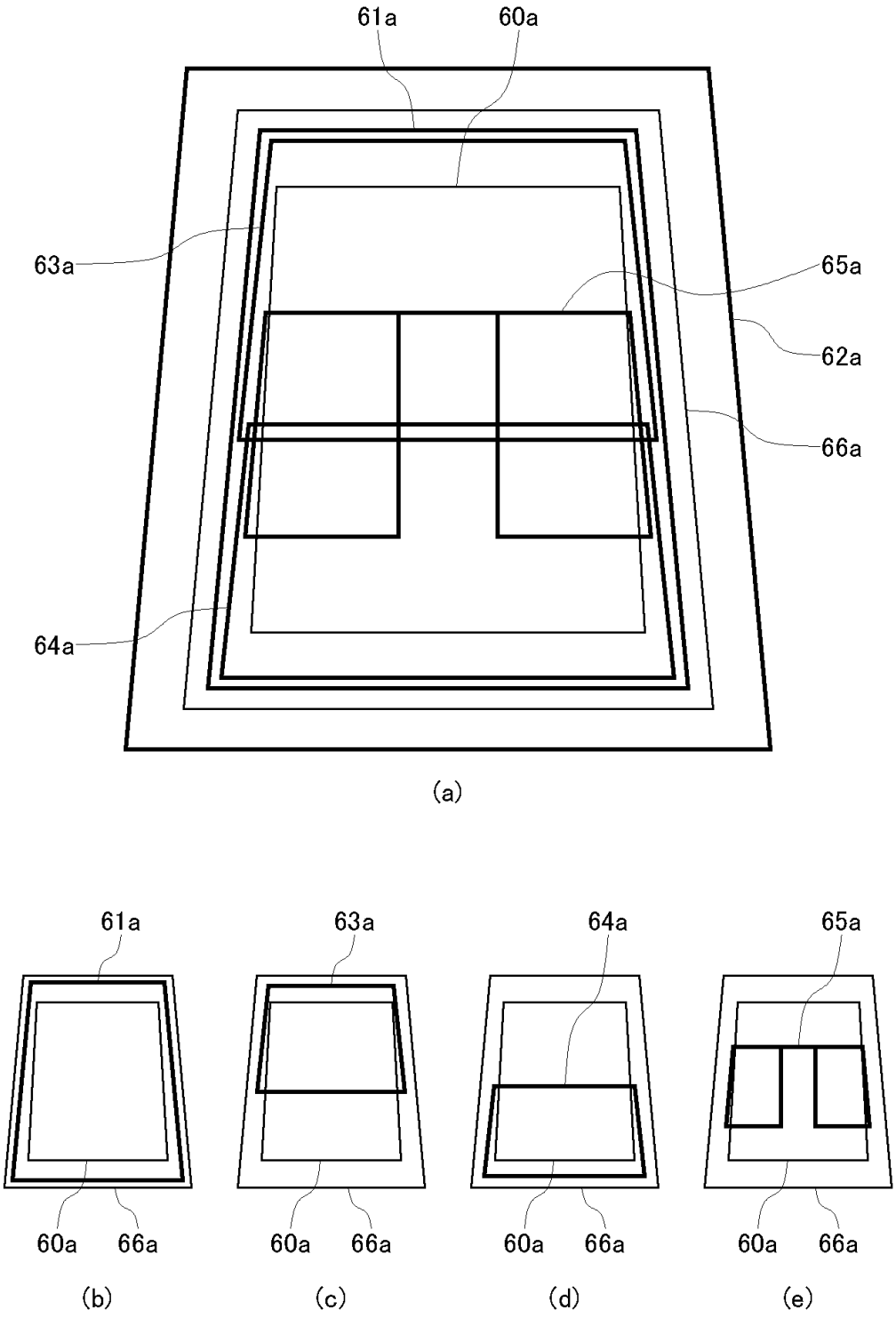
61a
60a
63a
65a
62a
66a
64a
(a)
61a
63a
64a
65a
60a
66a
60a
66a
60a
66a
60a
66a
(b)
(c)
(d)
(e)

Fig.22

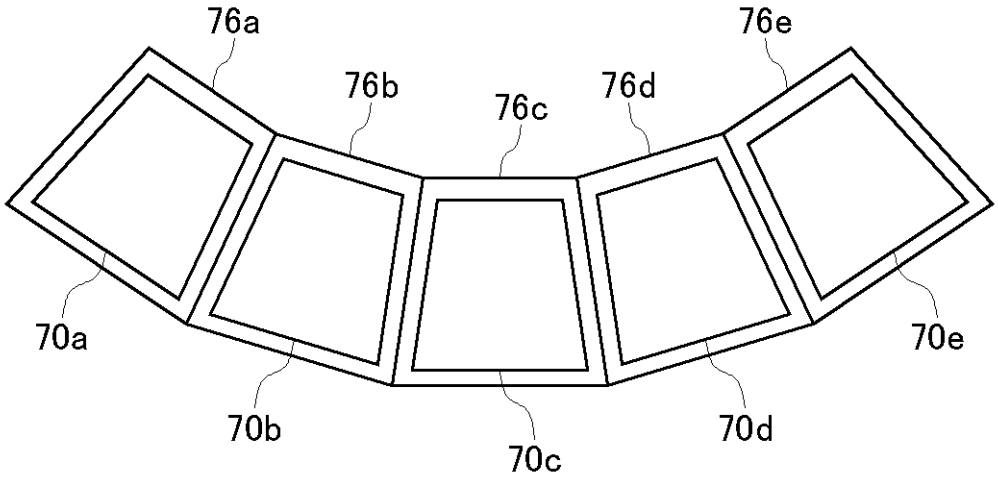

Fig.23

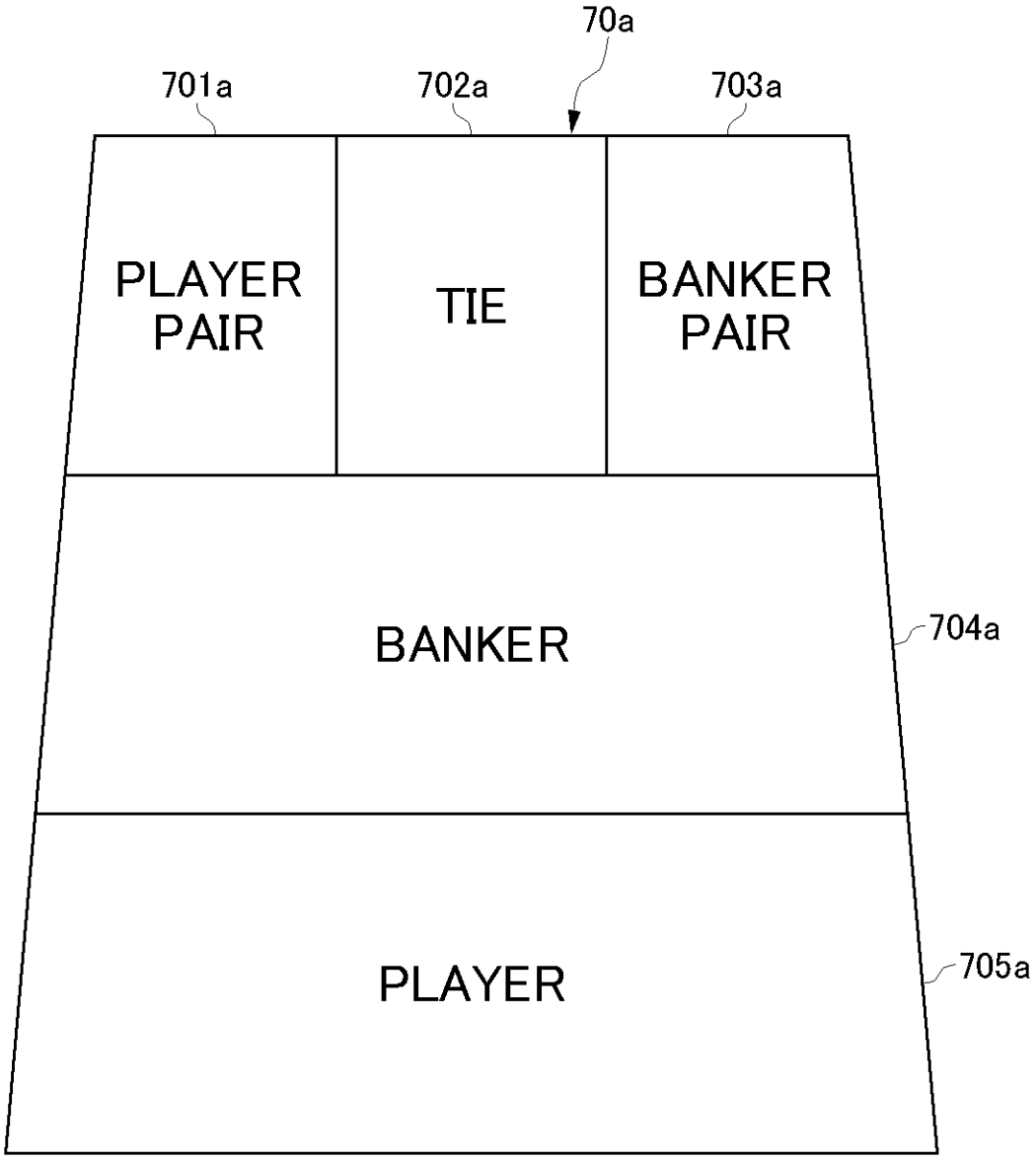
70a
701a
702a
703a
PLAYER PAIR
TIE
BANKER PAIR
BANKER
704a
PLAYER
705a

Fig.24

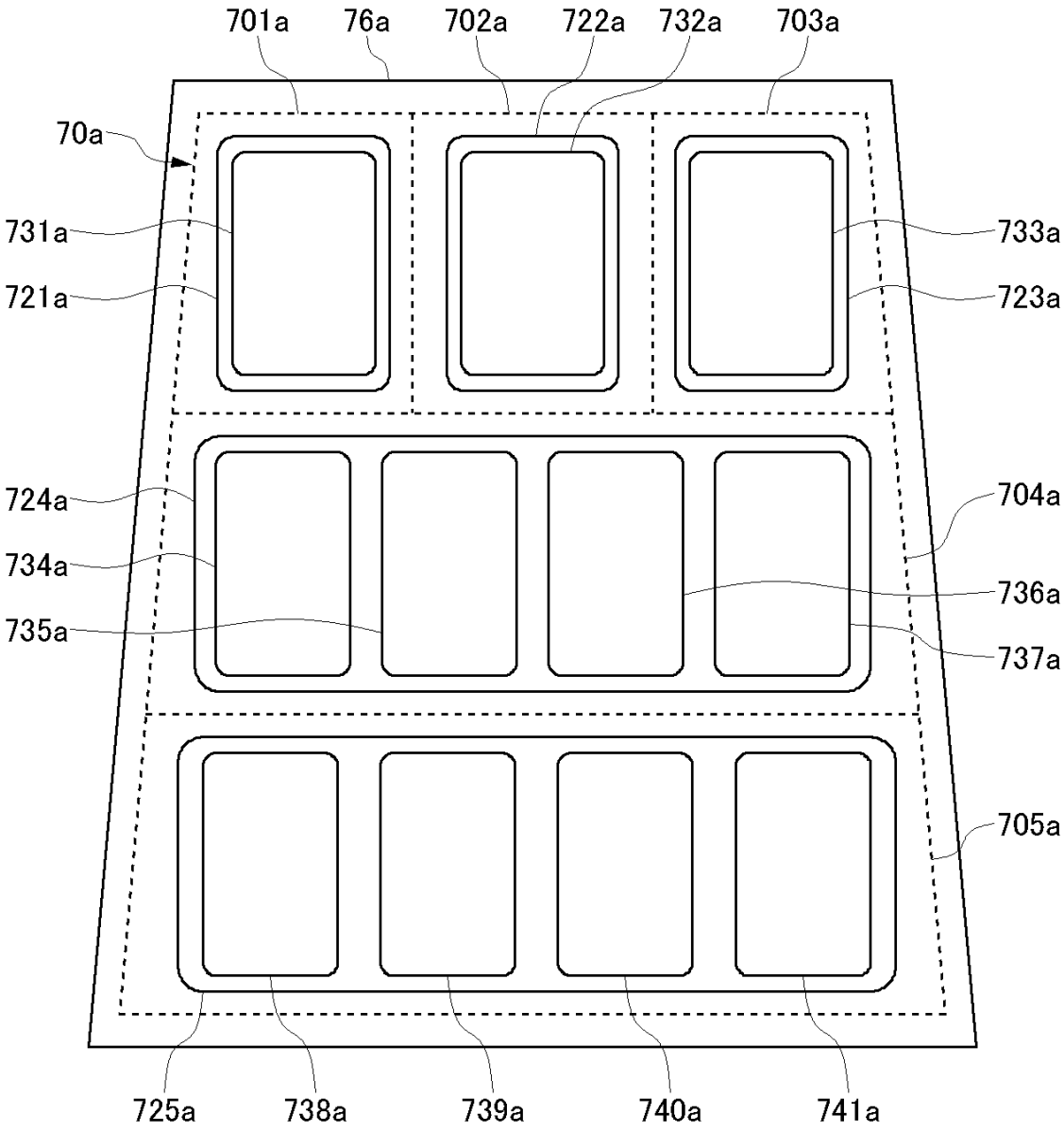
701a
76a
702a
722a
732a
703a
70a
731a
721a
733a
723a
724a
734a
735a
704a
736a
737a
705a
725a
738a
739a
740a
741a

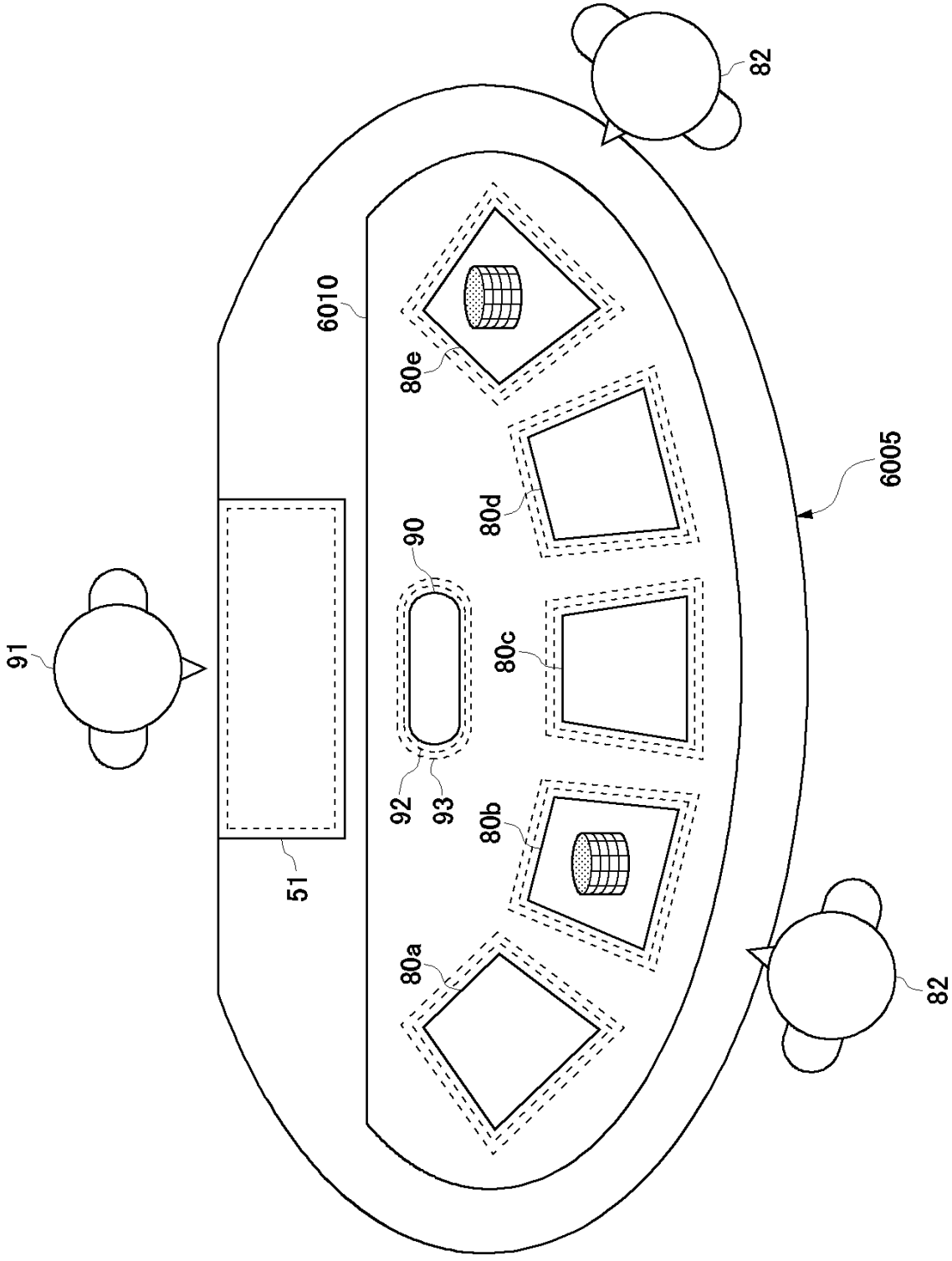

Fig.25