FIG.1

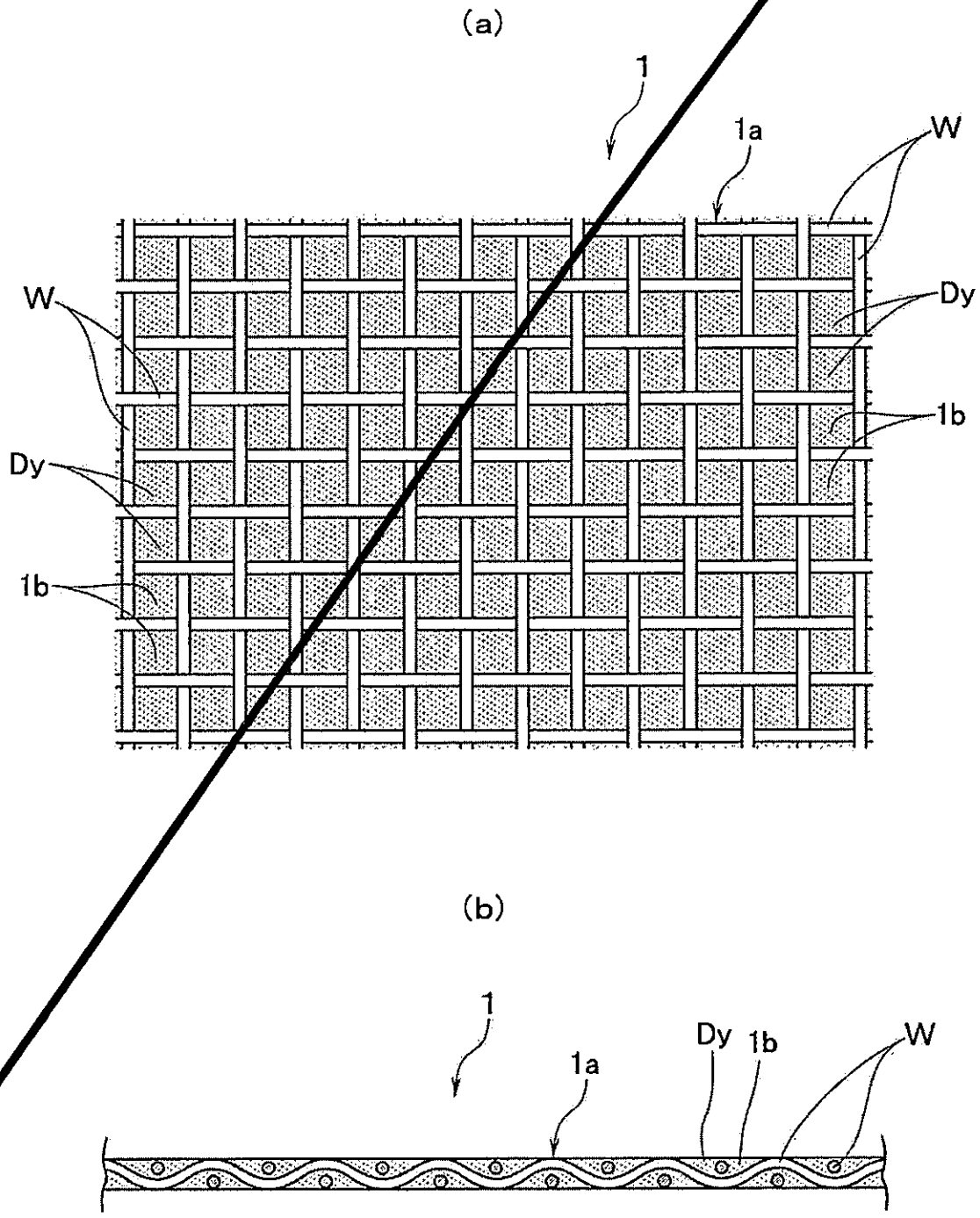

FIG.2

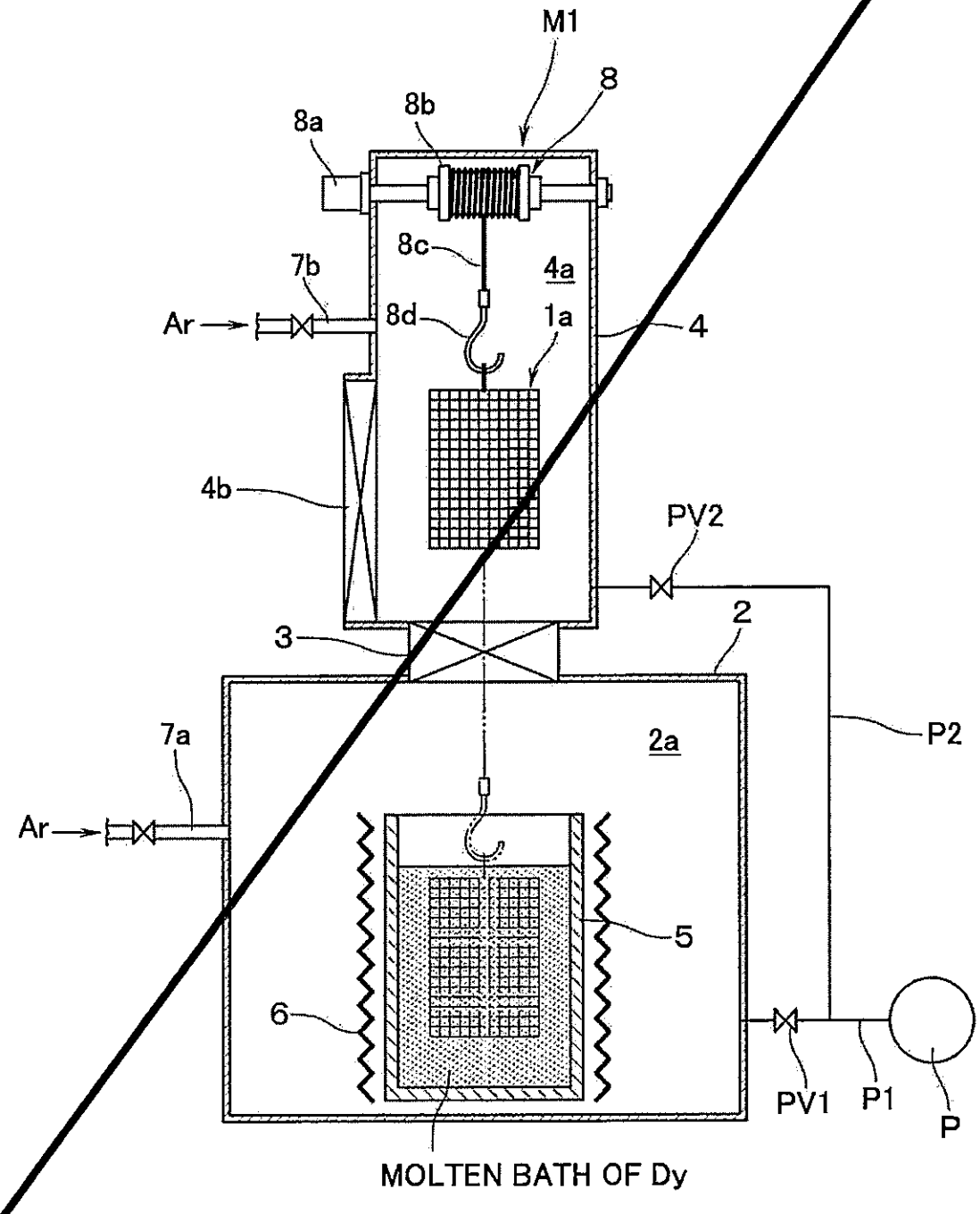
M1
8
8a
8b
8c
4a
7b
Ar
8d
1a
4
4b
PV2
2
3
7a
2a
P2
Ar
5
6
PV1
P1
P
MOLTEN BATH OF Dy

FIG.3

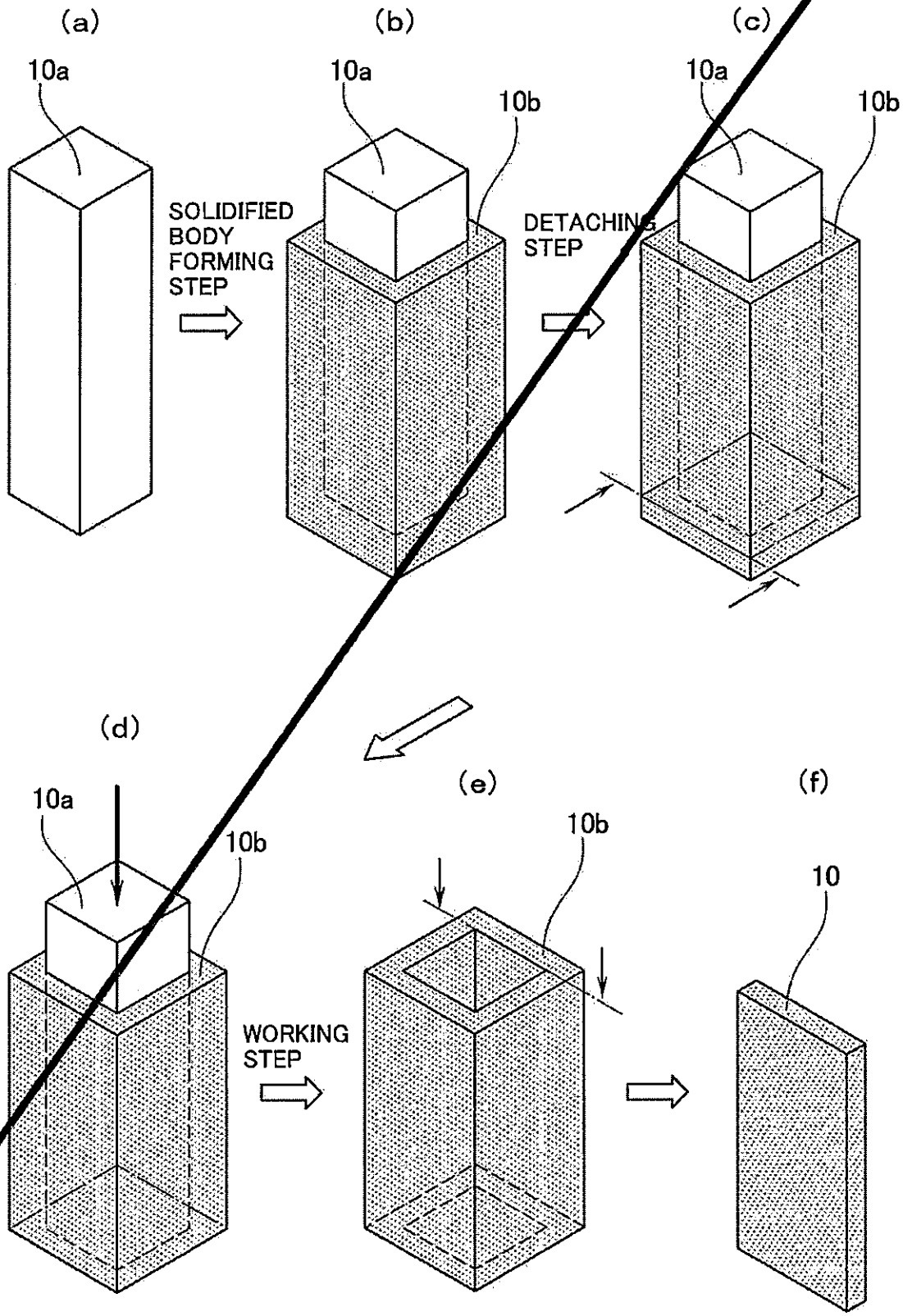
(a)
(b)
(c)
10a
10a
10b
10a
10b
SOLIDIFIED BODY FORMING STEP
DETACHING STEP
(d)
(e)
(f)
10a
10b
10b
10
WORKING STEP

FIG.4

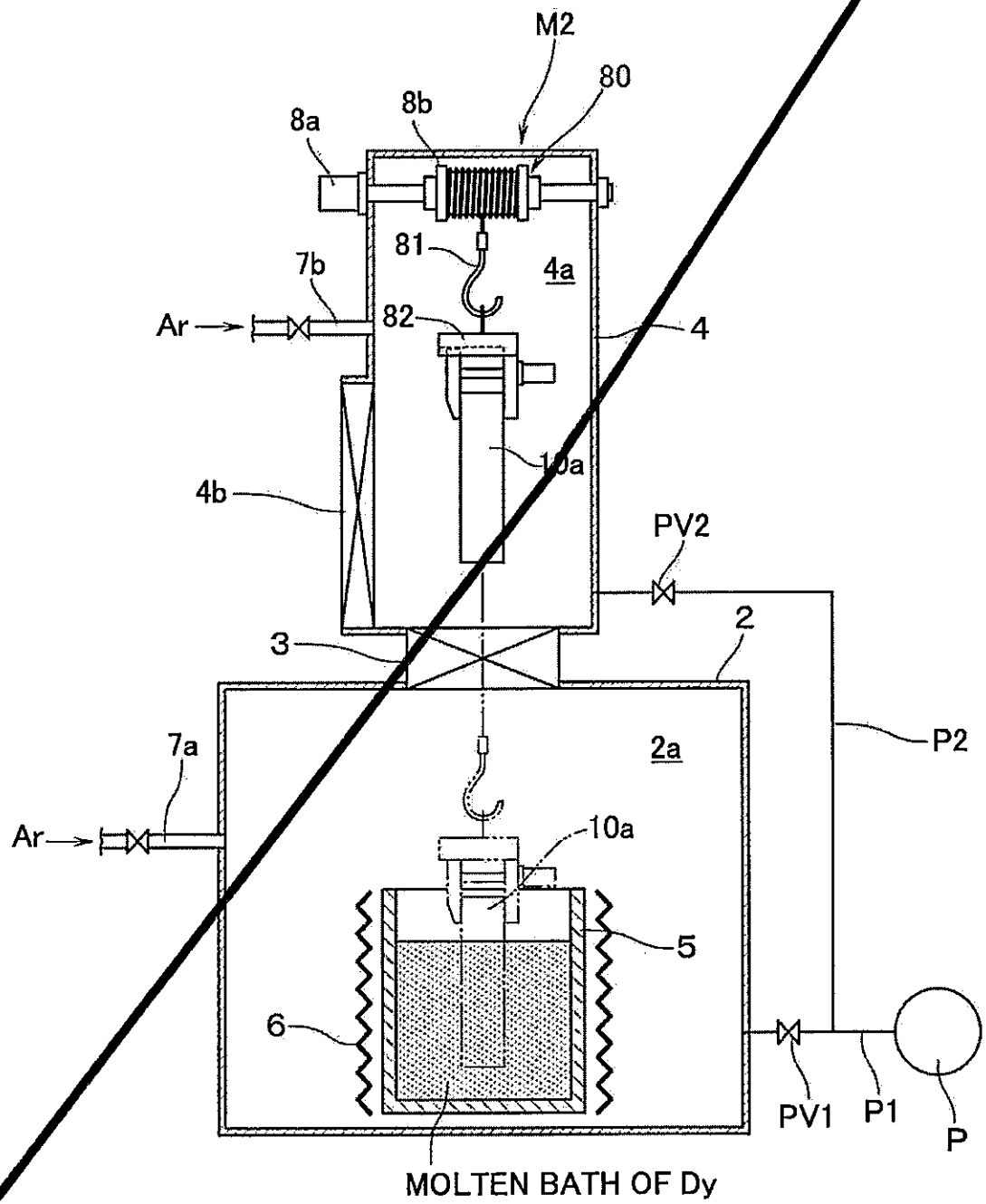
M2
80
8b
8a
81
7b
4a
Ar
82
4
10a
4b
PV2
3
2
P2
7a
2a
Ar
10a
5
6
PV1
P1
P
MOLTEN BATH OF Dy

FIG.5

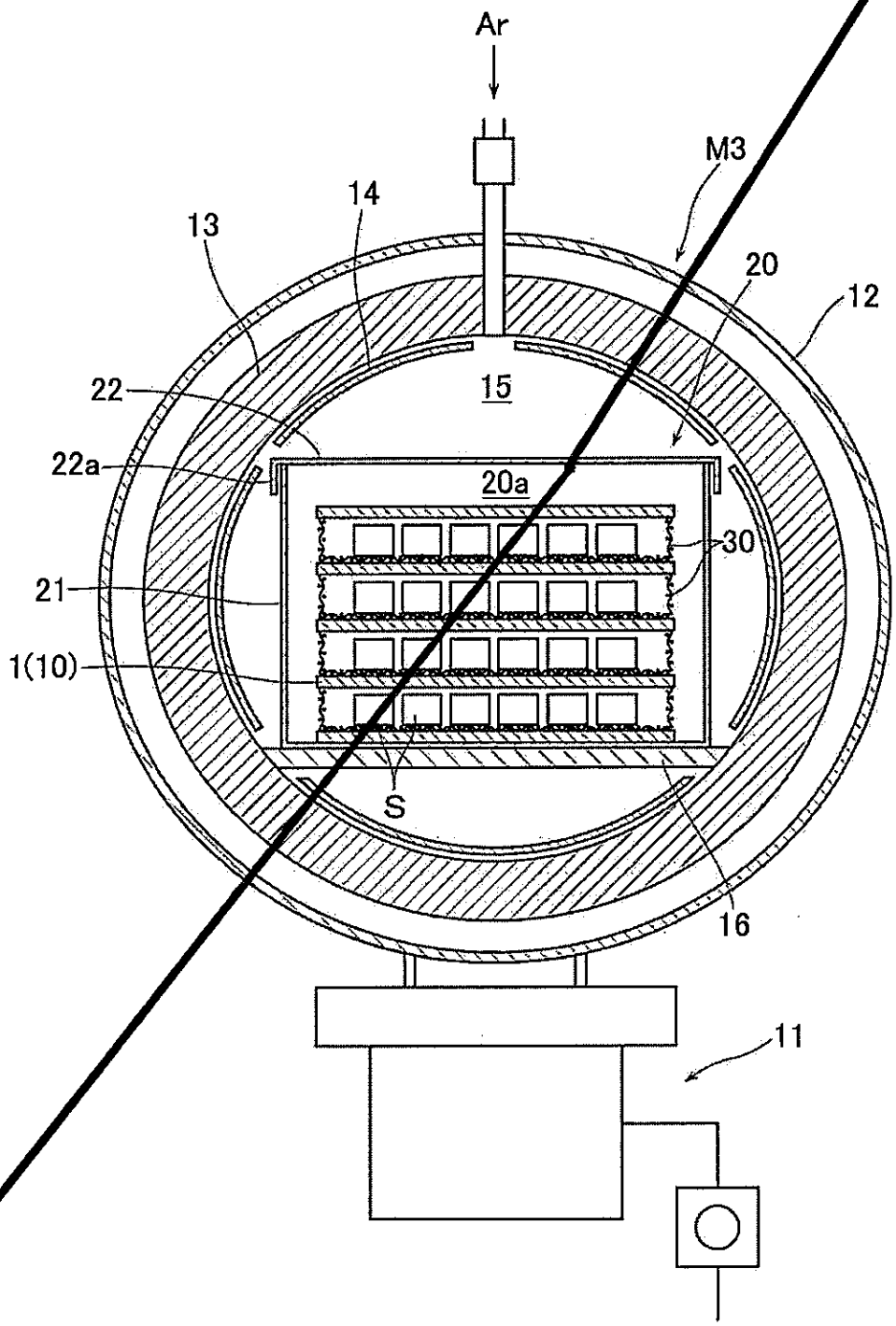

FIG.6

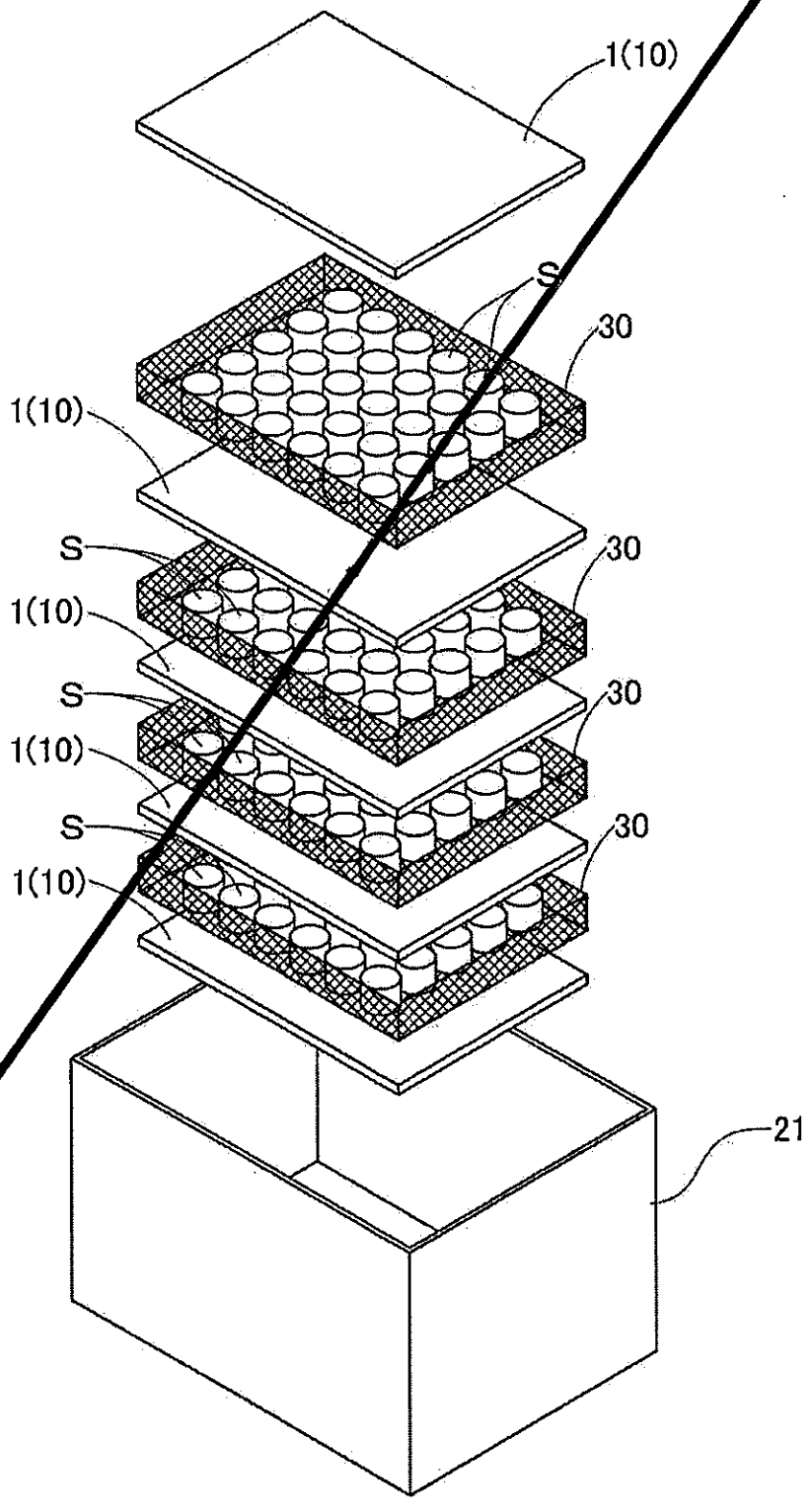

FIG.7

SAMPLE	1	2	3	4	5	6	7	8	9	COMPARATIVE EXAMPLE
MESHES (#)	2	5	8	10	20	30	40	50	60	PLATE
WIRE DIAMETER (mm)	2	1.9	1.2	0.5	0.4	0.35	0.22	0.12	0.1	—
MATERIAL	Mo	Ta	Nb	Nb	Mo	Ta	Nb	Nb	Nb	Mo
POROSITY (%) (SPOTS FREE FROM Dy)	100	60	0	0	0	0	0	0	0	0
Dy WEIGHT (g) PER 10 CM^3	1	20	40	45	55	50	41	32	26	8

FIG.8

(a)

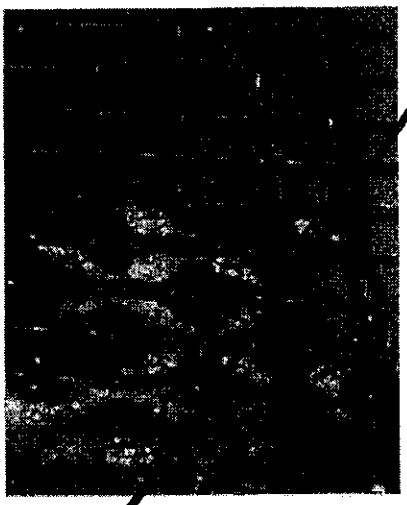

(b)



FIG.9

PULL-UP SPEED (m/s)	0.005	0.01	0.05	0.2	0.5	1
RESULT	×	○	○	○	○	×

FIG.10

	ELEMENT	SPECIFIC HEAT	SPECIFIC WEIGHT	CALORIFIC VALUE PER UNIT VOLUME (SPECIFIC HEAT X SPECIFIC WEIGHT)
	UNIT	J/kg·K	g/cm^3	J/K·m^3
COMPARATIVE EXAMPLE	C	710	2.3	1,604,600
	Si	700	2.3	1,610,000
	Mg	1020	1.7	1,734,000
EXAMPLE	Nb	265	8.6	2,271,050
	Ta	140	16.6	2,324,000
	Ti	520	4.5	2,340,000
	W	130	19.2	2,496,000
	Mo	250	10.2	2,550,000
	V	490	6.1	2,989,000
COMPARATIVE EXAMPLE	Cu	379	8.9	3,373,100

FIG.1

(a)

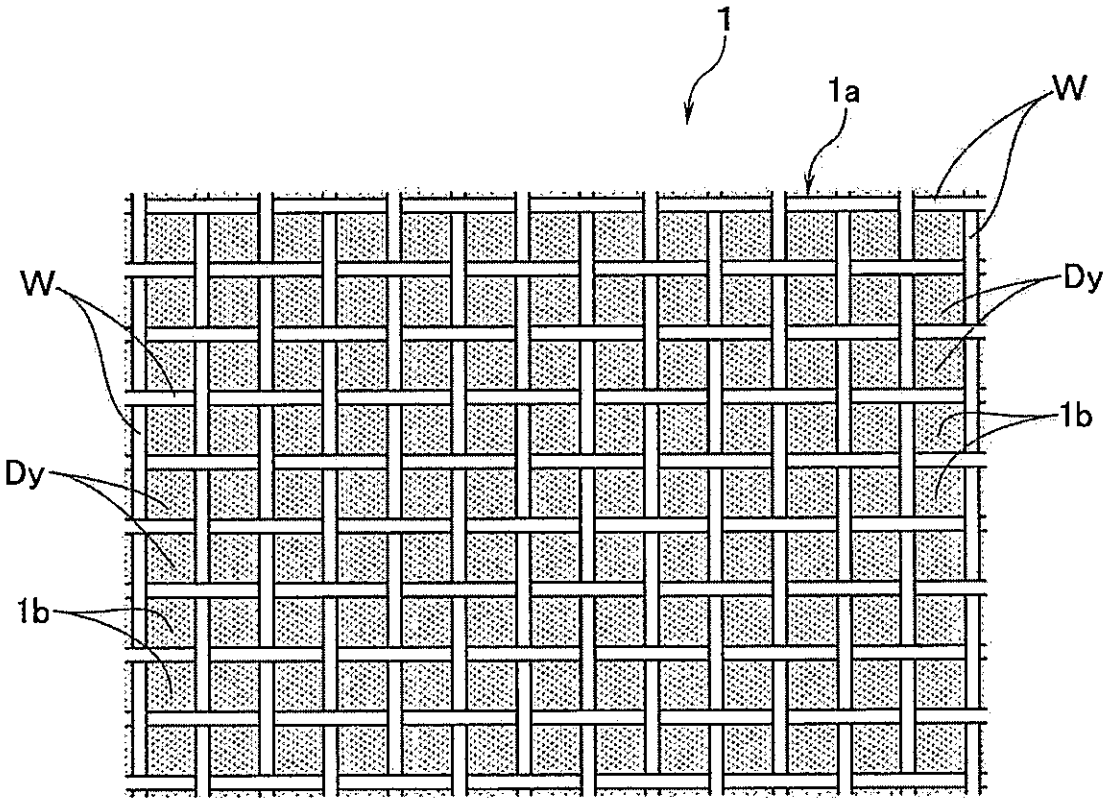

(b)

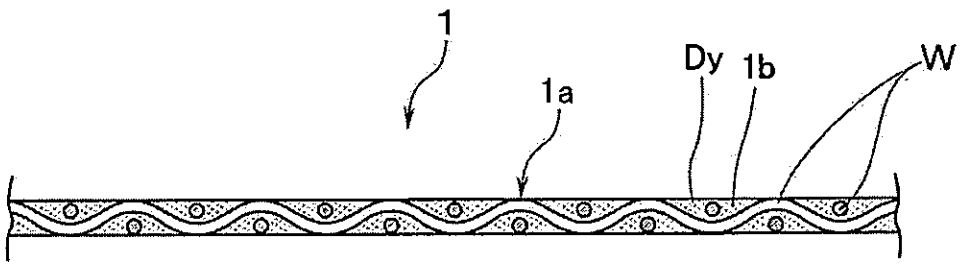

FIG.2

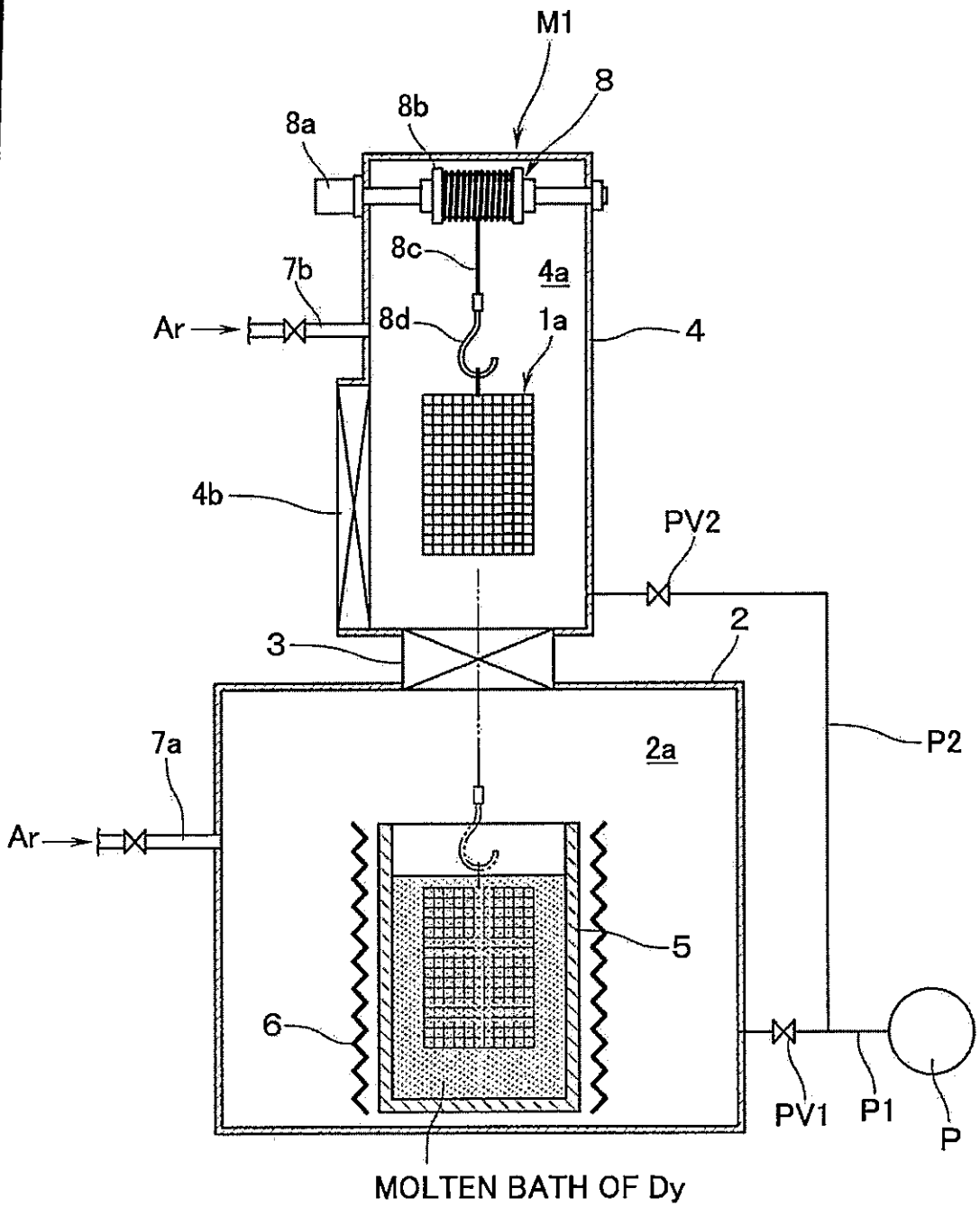
M1
8
8a
8b
8c
4a
7b
Ar
8d
1a
4
4b
PV2
2
3
7a
2a
P2
Ar
5
6
PV1
P1
P
MOLTEN BATH OF Dy

FIG.3

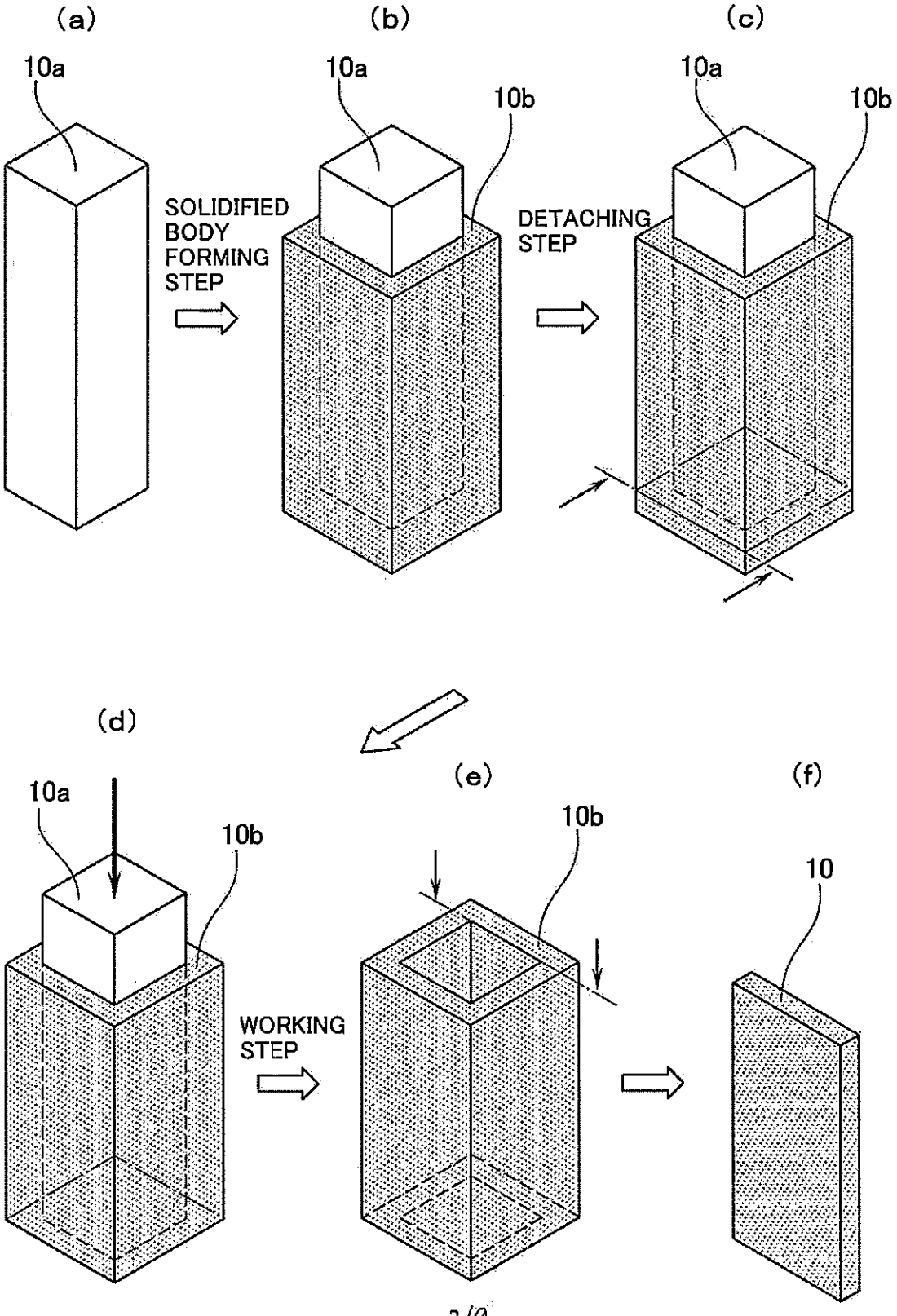
(a)
(b)
(c)
10a
10a
10b
10a
10b
SOLIDIFIED BODY FORMING STEP
DETACHING STEP
(d)
(e)
(f)
10a
10b
10b
10
WORKING STEP

FIG.4

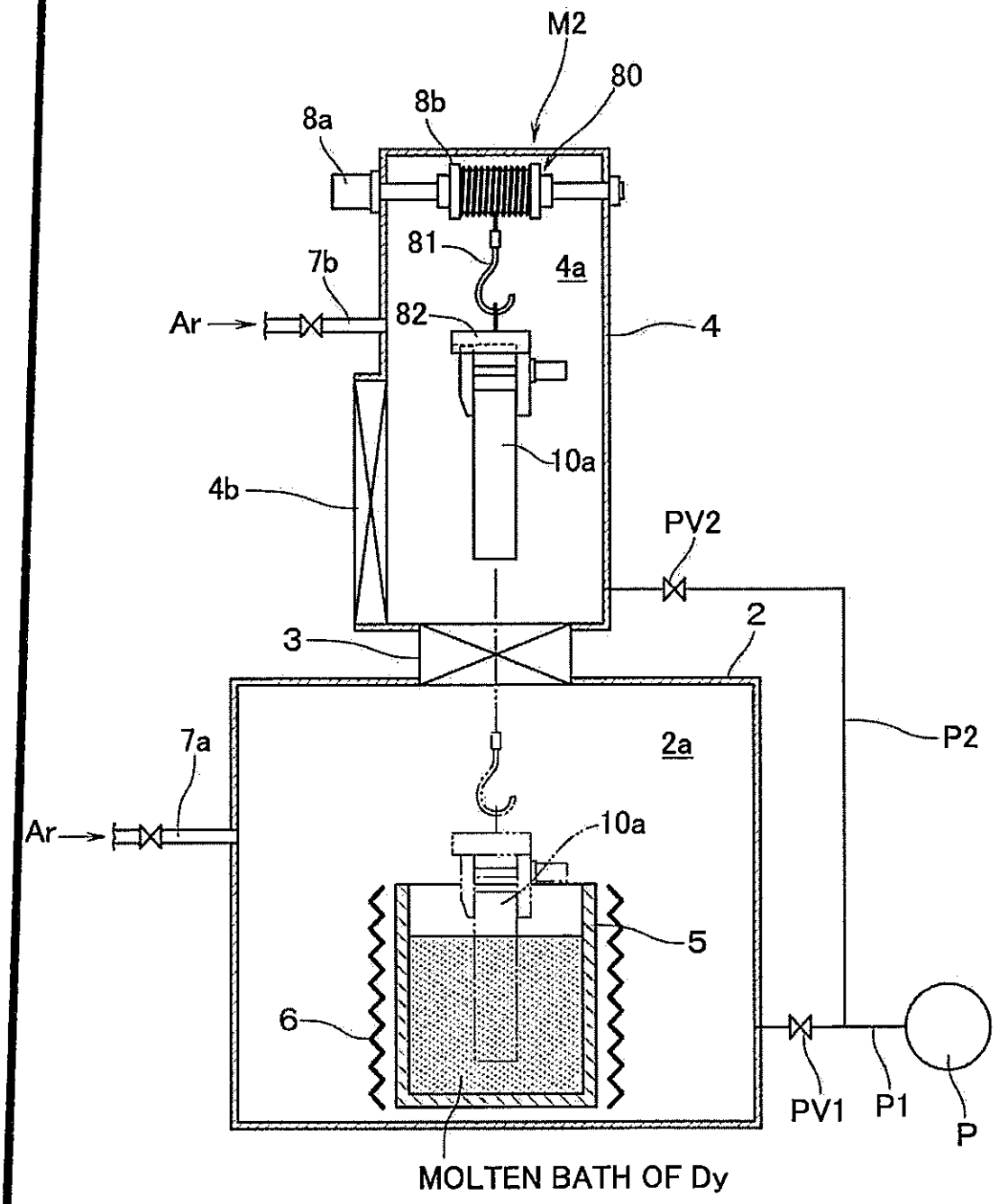
M2
80
8b
8a
81
7b
4a
Ar
82
4
10a
4b
PV2
3
2
7a
2a
P2
Ar
10a
5
6
PV1
P1
P
MOLTEN BATH OF Dy

FIG.5

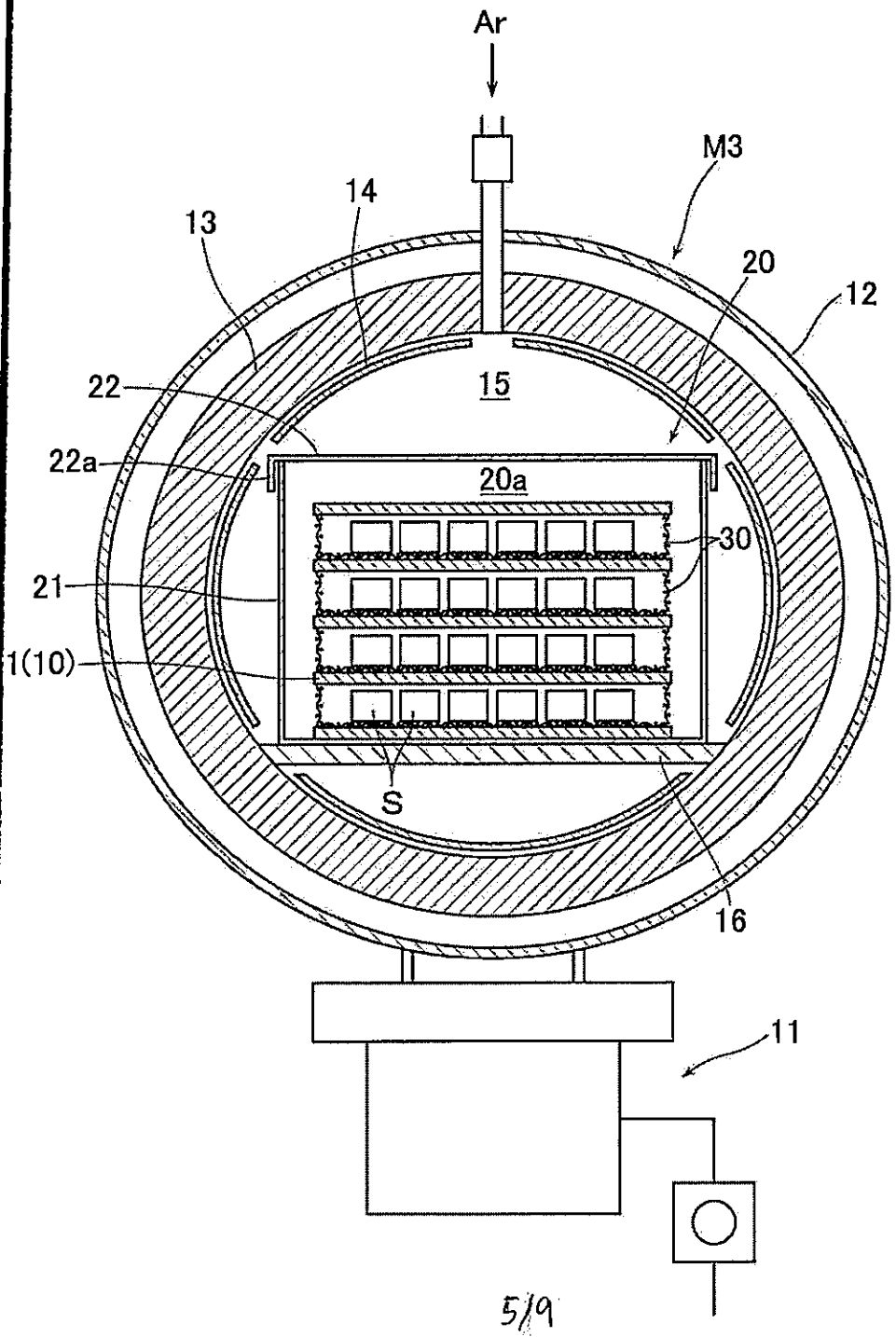

FIG.6

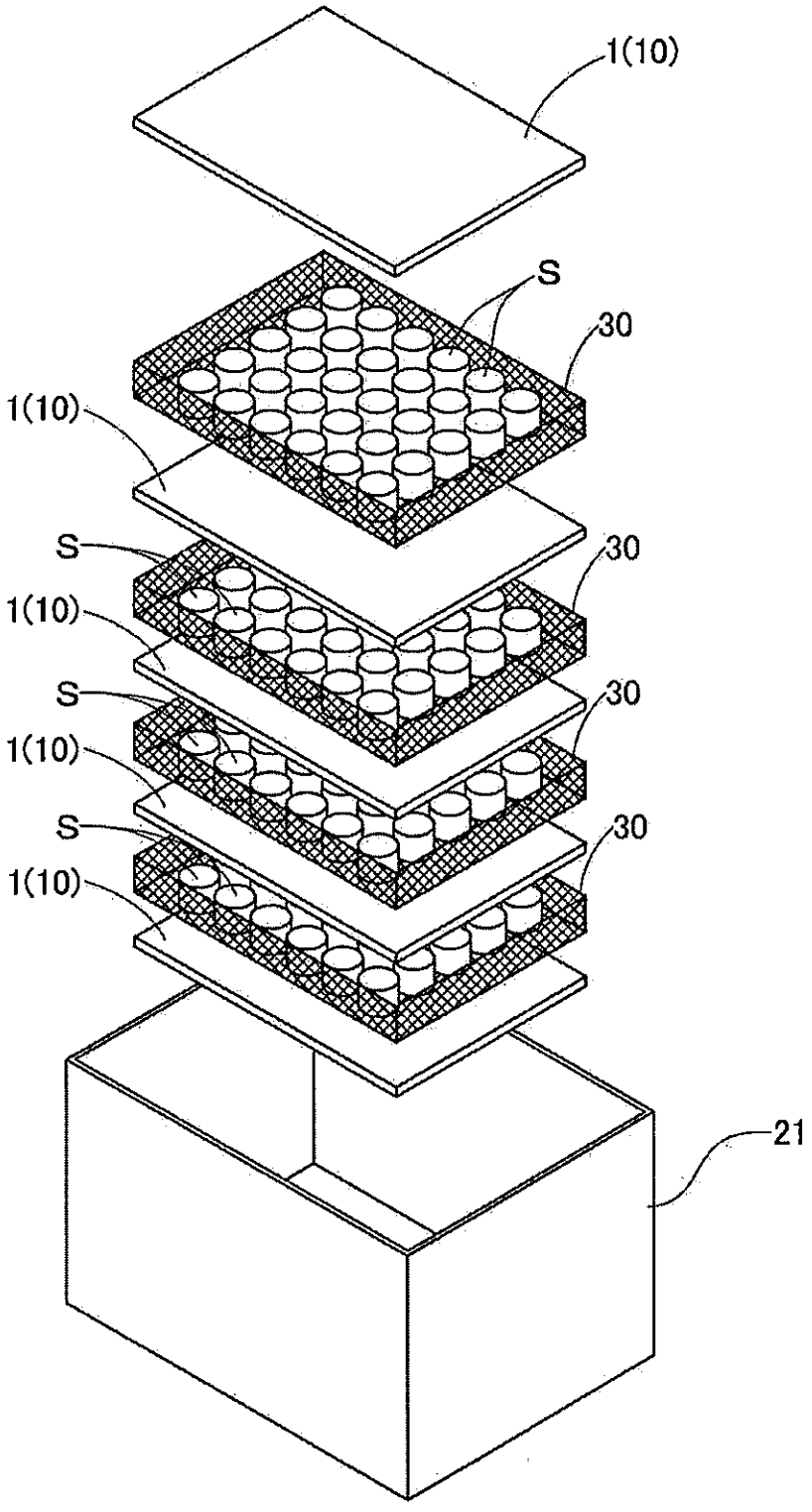

FIG.7

SAMPLE	1	2	3	4	5	6	7	8	9	COMPARATIVE EXAMPLE
MESHES (#)	2	5	8	10	20	30	40	50	60	PLATE
WIRE DIAMETER (mm)	2	1.9	1.2	0.5	0.4	0.35	0.22	0.12	0.1	—
MATERIAL	Mo	Ta	Nb	Nb	Mo	Ta	Nb	Nb	Nb	Mo
POROSITY (%) (SPOTS FREE FROM Dy)	100	60	0	0	0	0	0	0	0	0
Dy WEIGHT (g) PER 10 CM^3	1	20	40	45	55	50	41	32	26	8

FIG.8

(a)

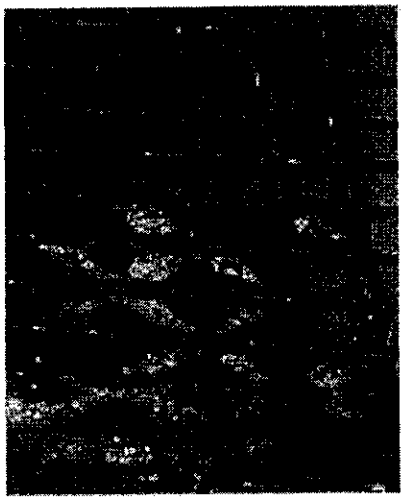

(b)



FIG.9

PULL-UP SPEED (m/s)	0.005	0.01	0.05	0.2	0.5	1
RESULT	×	○	○	○	○	×

FIG.10

	ELEMENT	SPECIFIC HEAT	SPECIFIC WEIGHT	CALORIFIC VALUE PER UNIT VOLUME (SPECIFIC HEAT X SPECIFIC WEIGHT)
	UNIT	J/kg·K	g/cm^3	J/K·m^3
COMPARATIVE EXAMPLE	C	710	2.3	1,604,600
	Si	700	2.3	1,610,000
	Mg	1020	1.7	1,734,000
EXAMPLE	Nb	265	8.6	2,271,050
	Ta	140	16.6	2,324,000
	Ti	520	4.5	2,340,000
	W	130	19.2	2,496,000
	Mo	250	10.2	2,550,000
	V	490	6.1	2,989,000
COMPARATIVE EXAMPLE	Cu	379	8.9	3,373,100