Fig 1

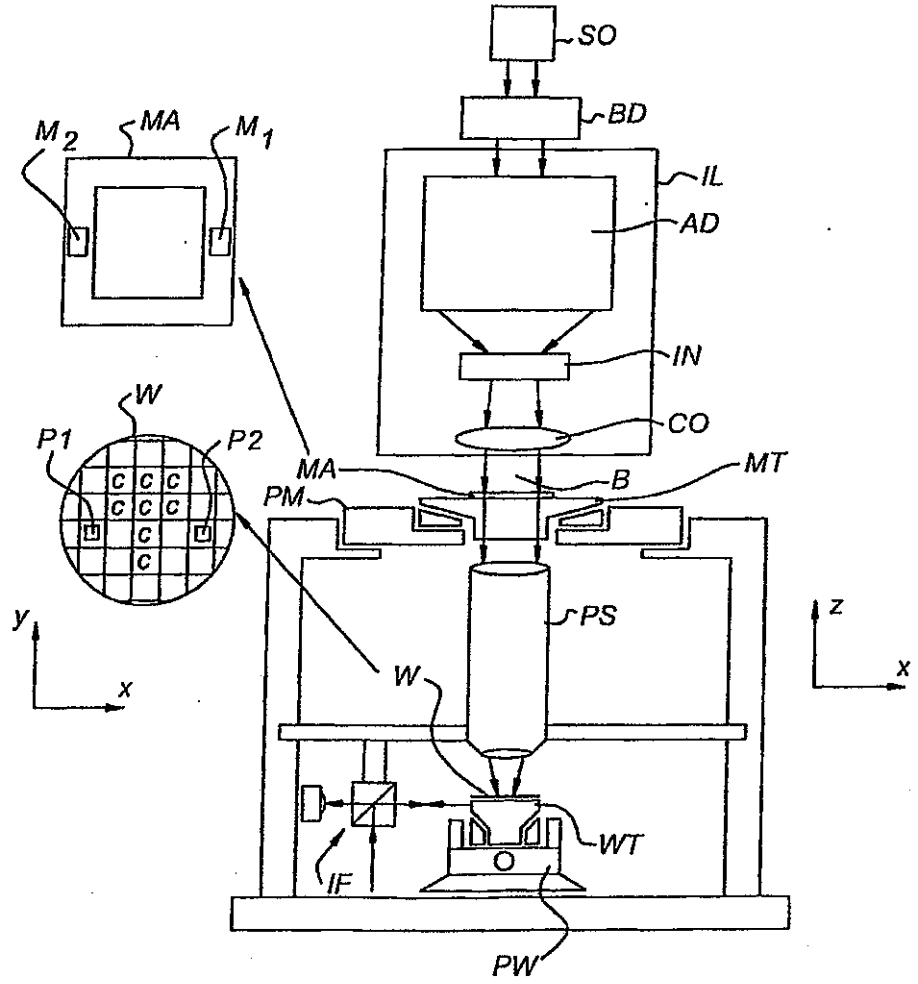

Fig 2

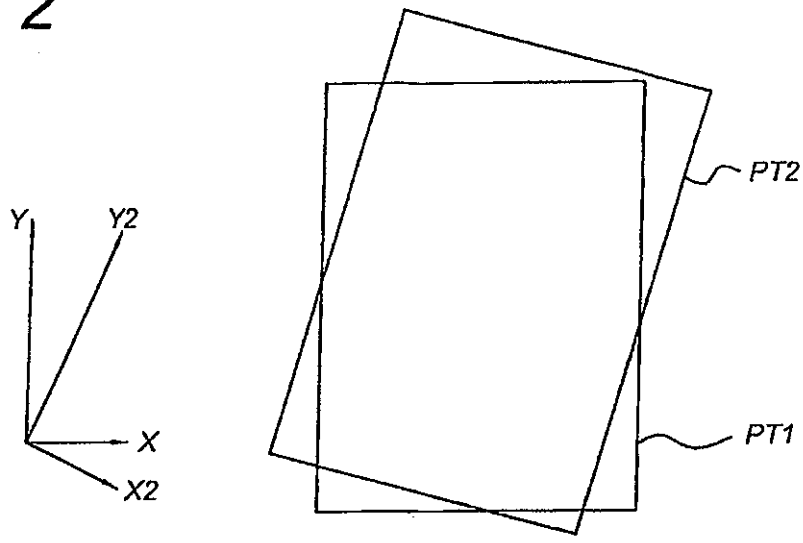

Fig 3

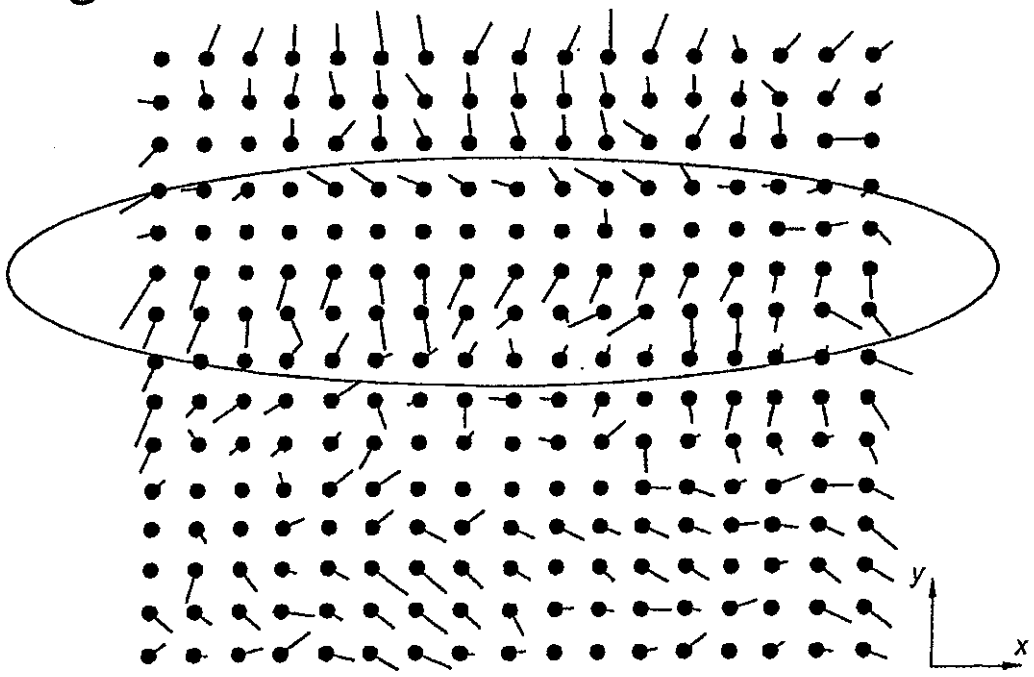

Fig 4a

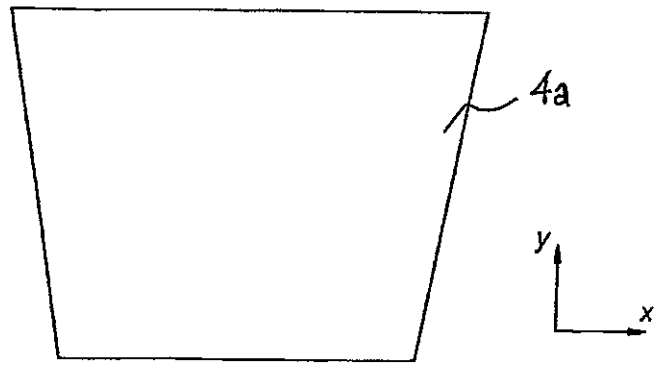

Fig 4b

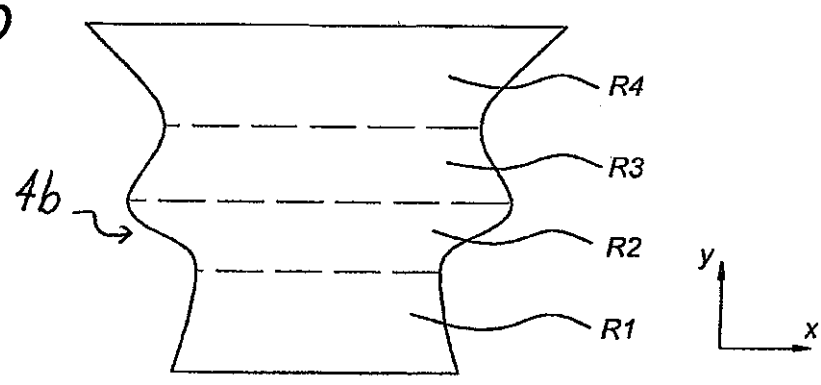

Fig 4c

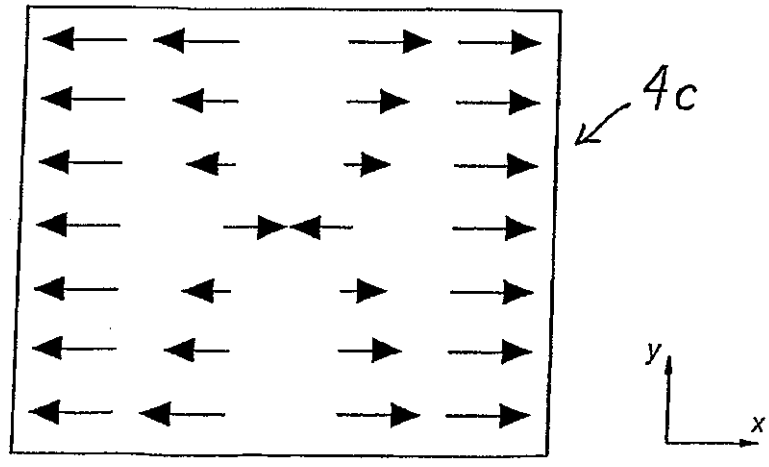

Fig 5a

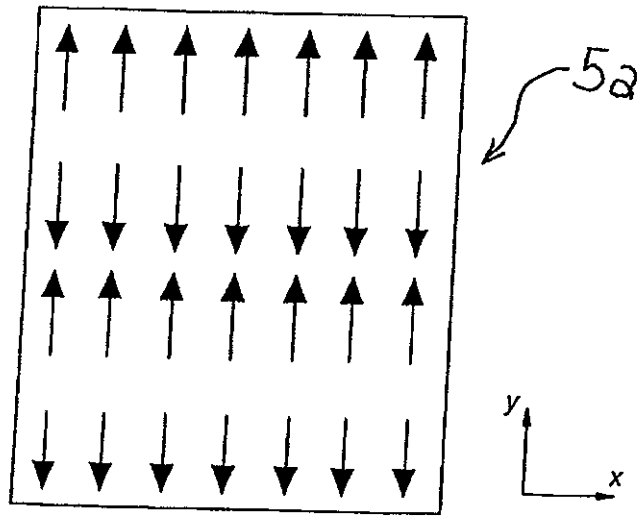

Fig 5b

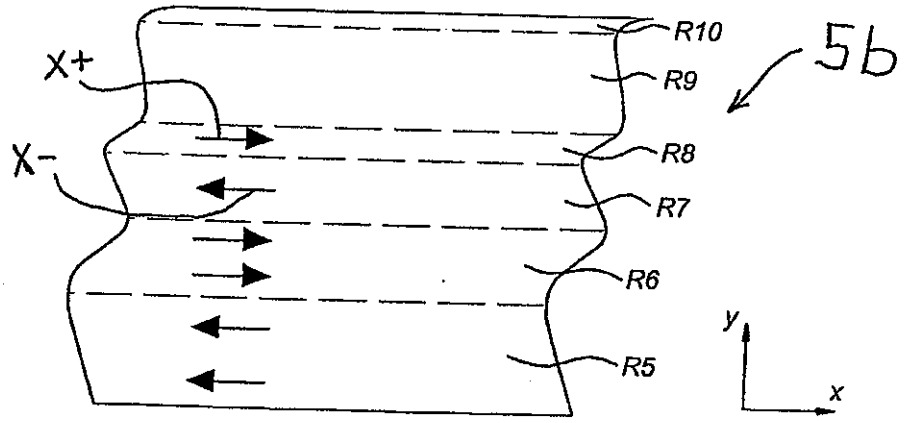

Fig 5c

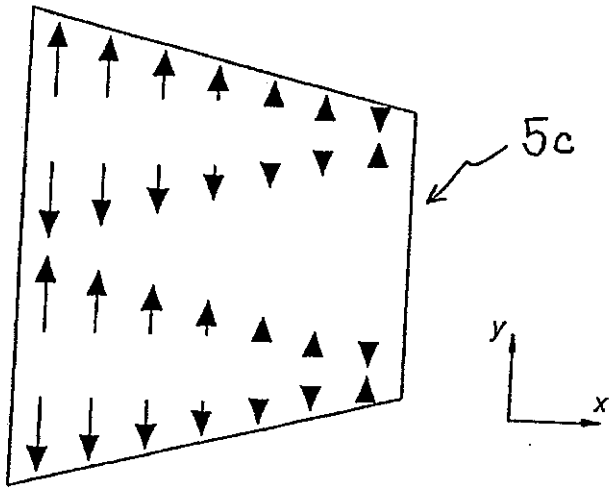

Fig 6

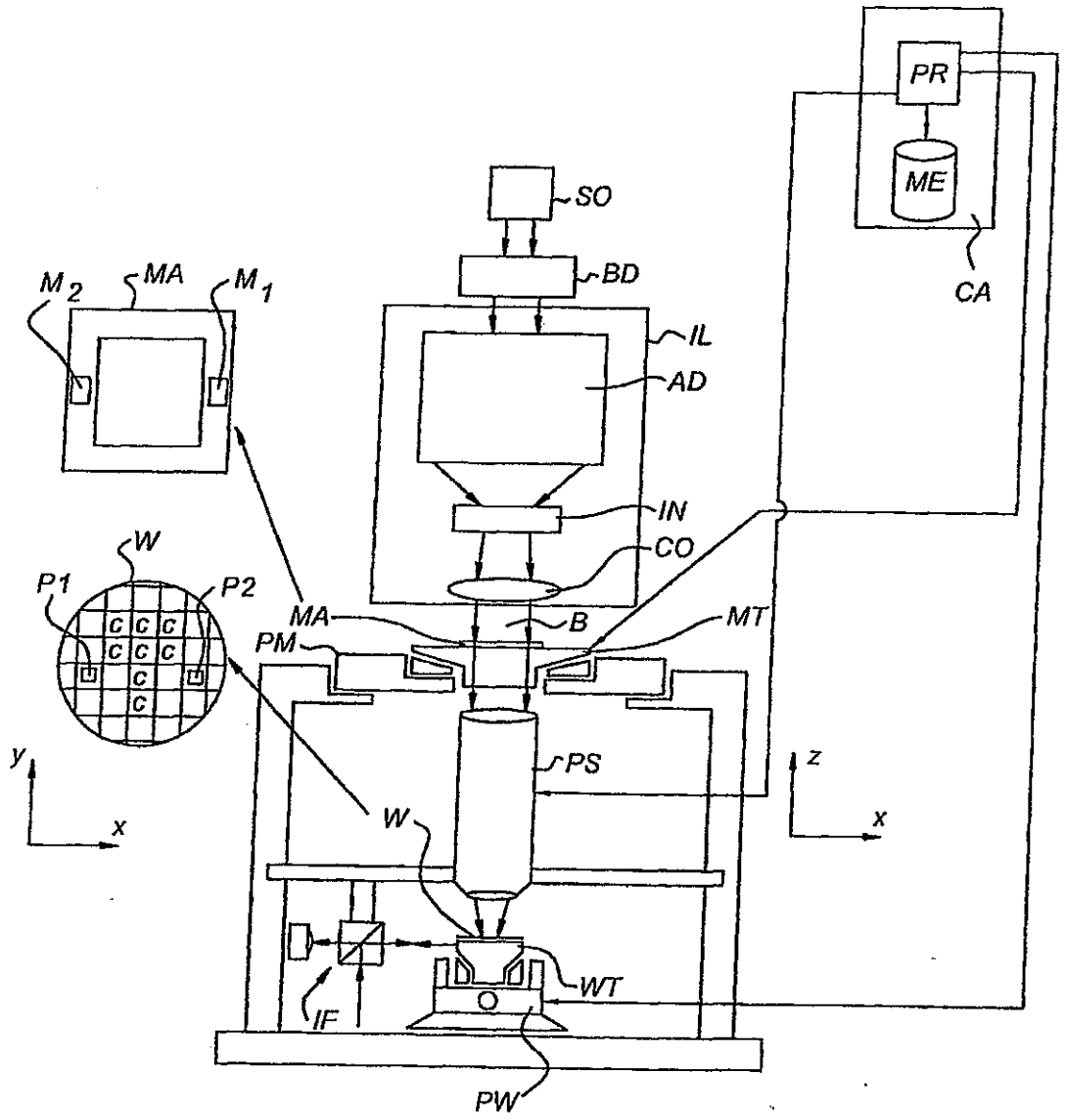
PR
ME
CA
SO
BD
IL
AD
IN
CO
B
MT
MA
PM
PS
W
WT
IF
PW
M2
MA
M1
W
P1
P2
C
y
x
z
x