Fig. 1

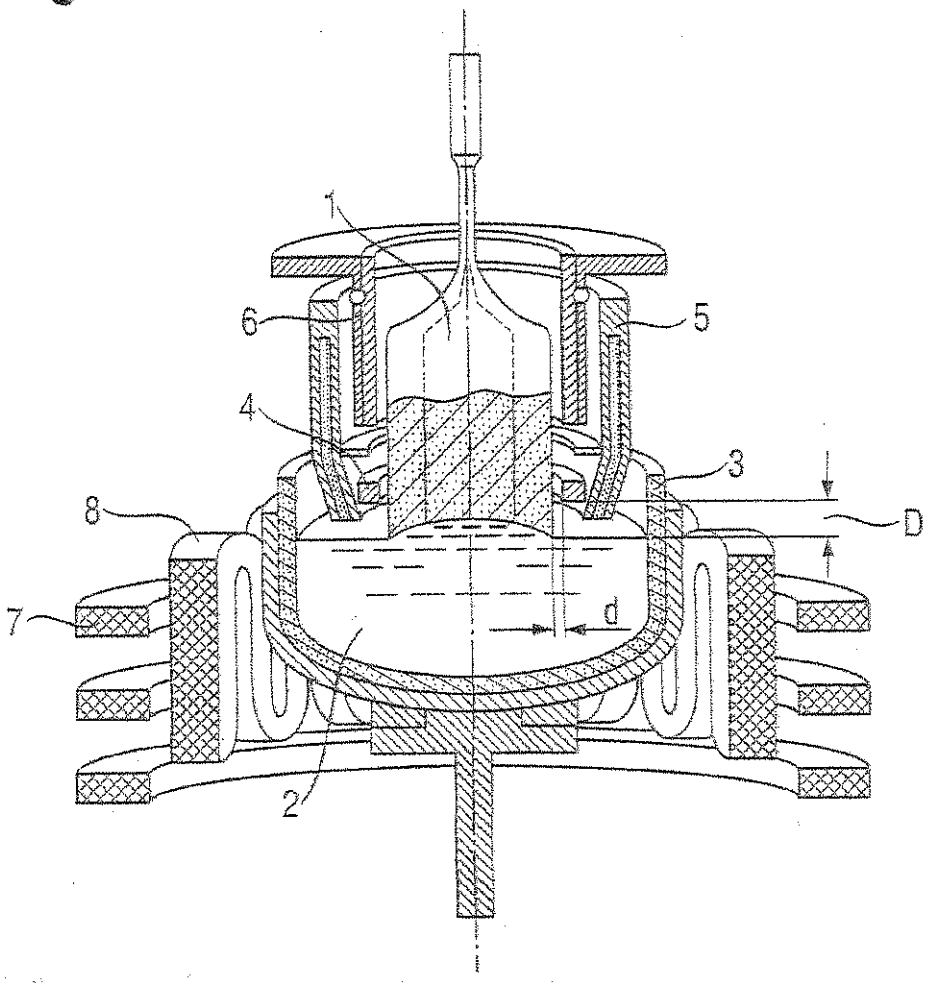

Fig. 2

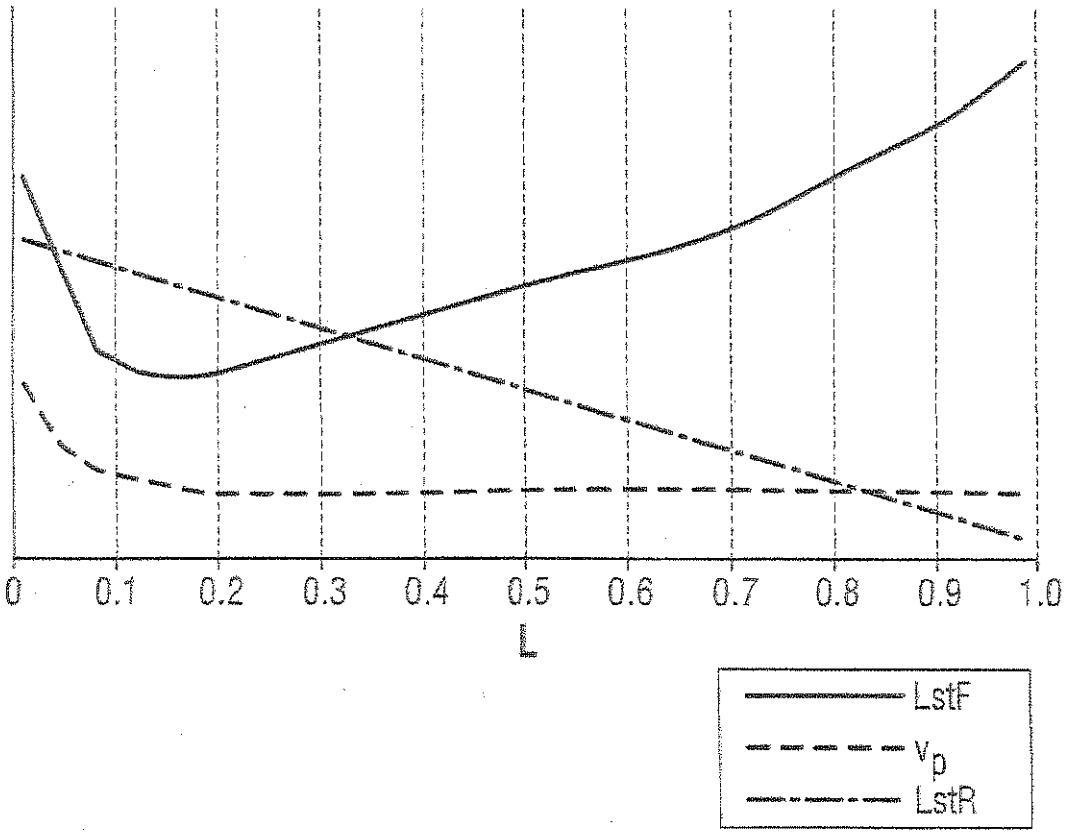

Fig. 3

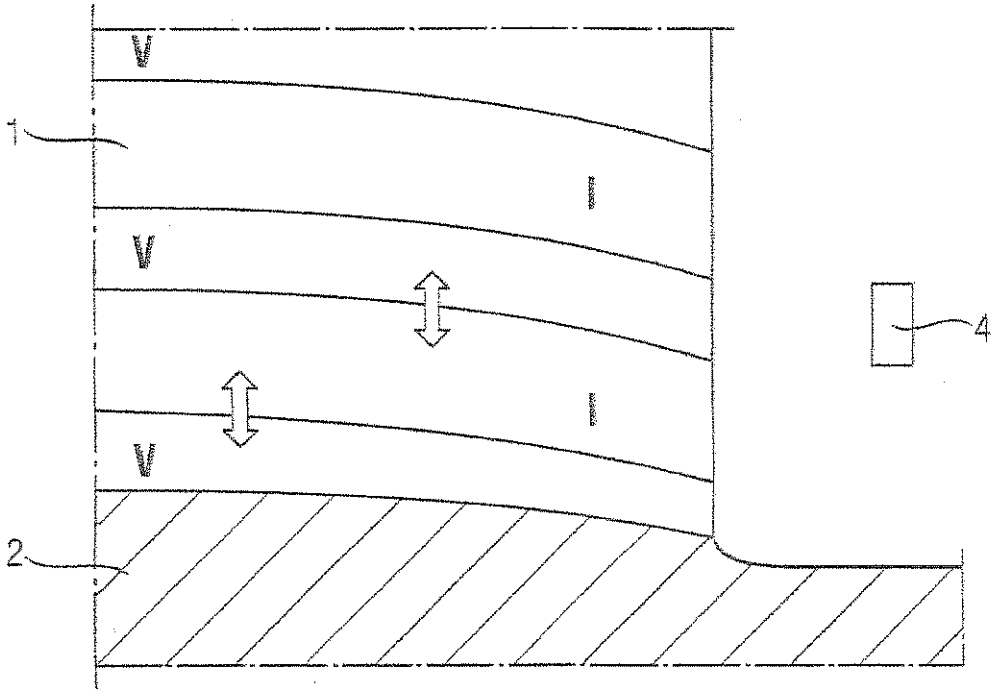

Fig. 4

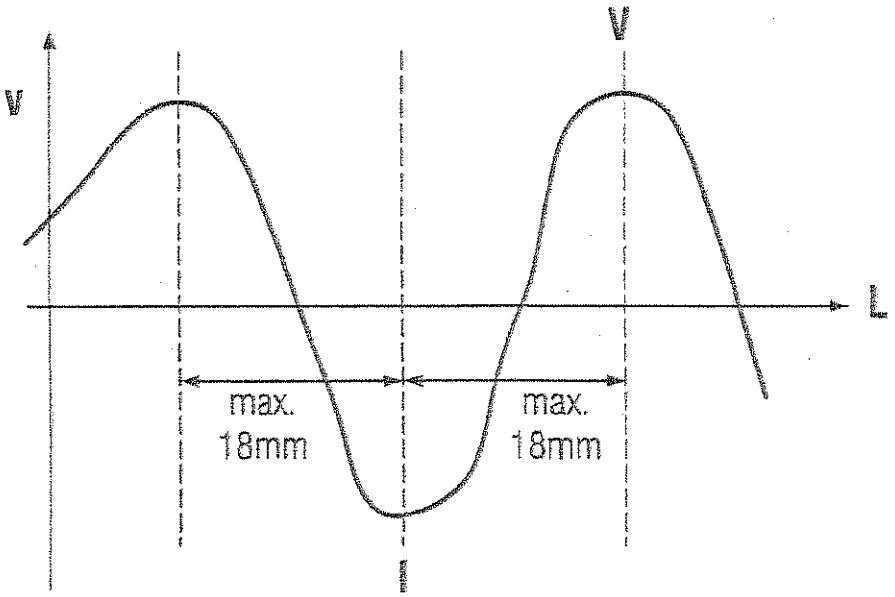

Fig. 5

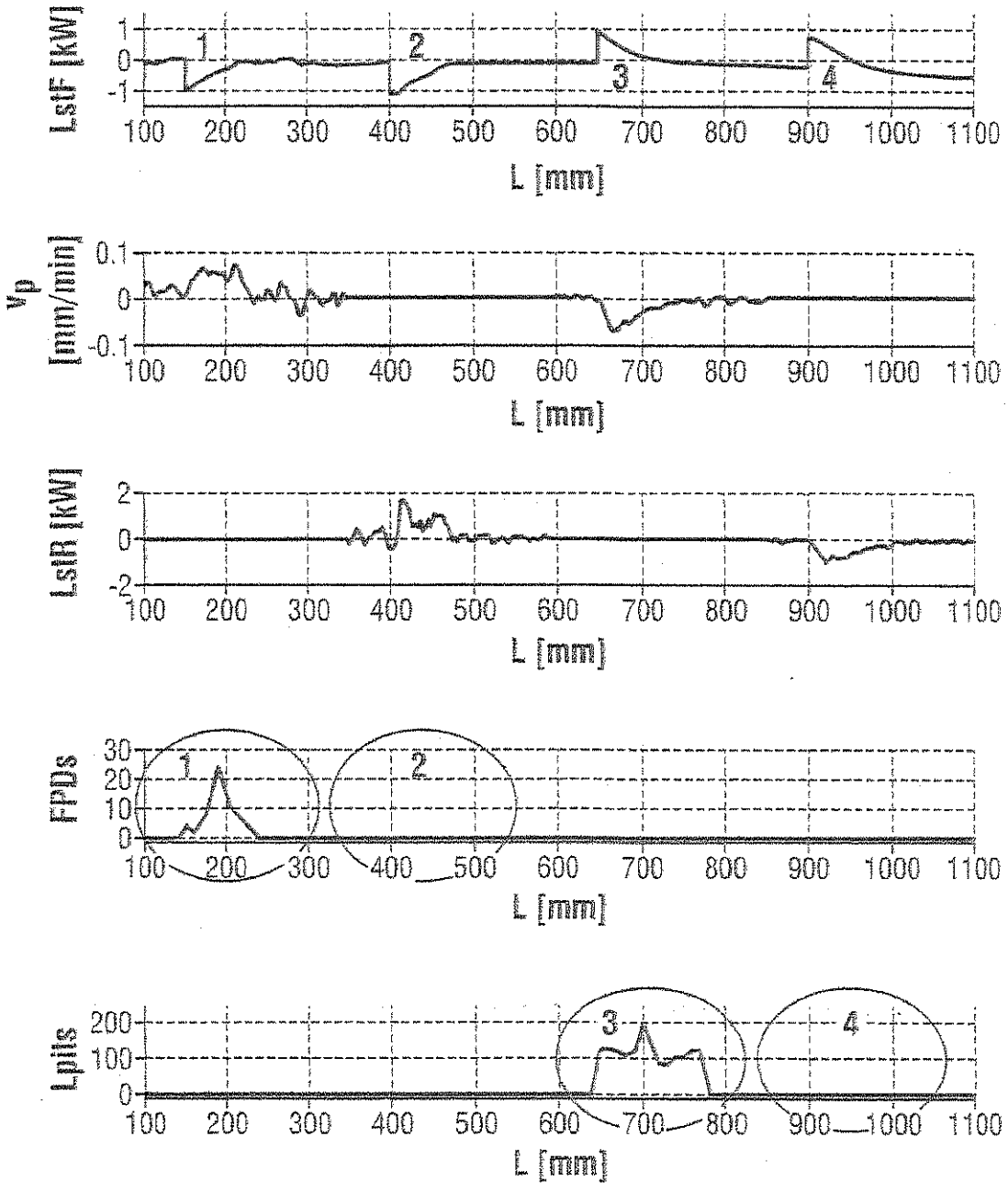
LstF [kW]
1
0
-1
1
2
3
4
100 200 300 400 500 600 700 800 900 1000 1100
L [mm]
vp [mm/min]
0.1
0
-0.1
100 200 300 400 500 600 700 800 900 1000 1100
L [mm]
LstR [kW]
2
0
-2
100 200 300 400 500 600 700 800 900 1000 1100
L [mm]
FPDs
30
20
10
0
1
2
100 200 300 400 500 600 700 800 900 1000 1100
L [mm]
Lpits
200
100
0
3
4
100 200 300 400 500 600 700 800 900 1000 1100
L [mm]