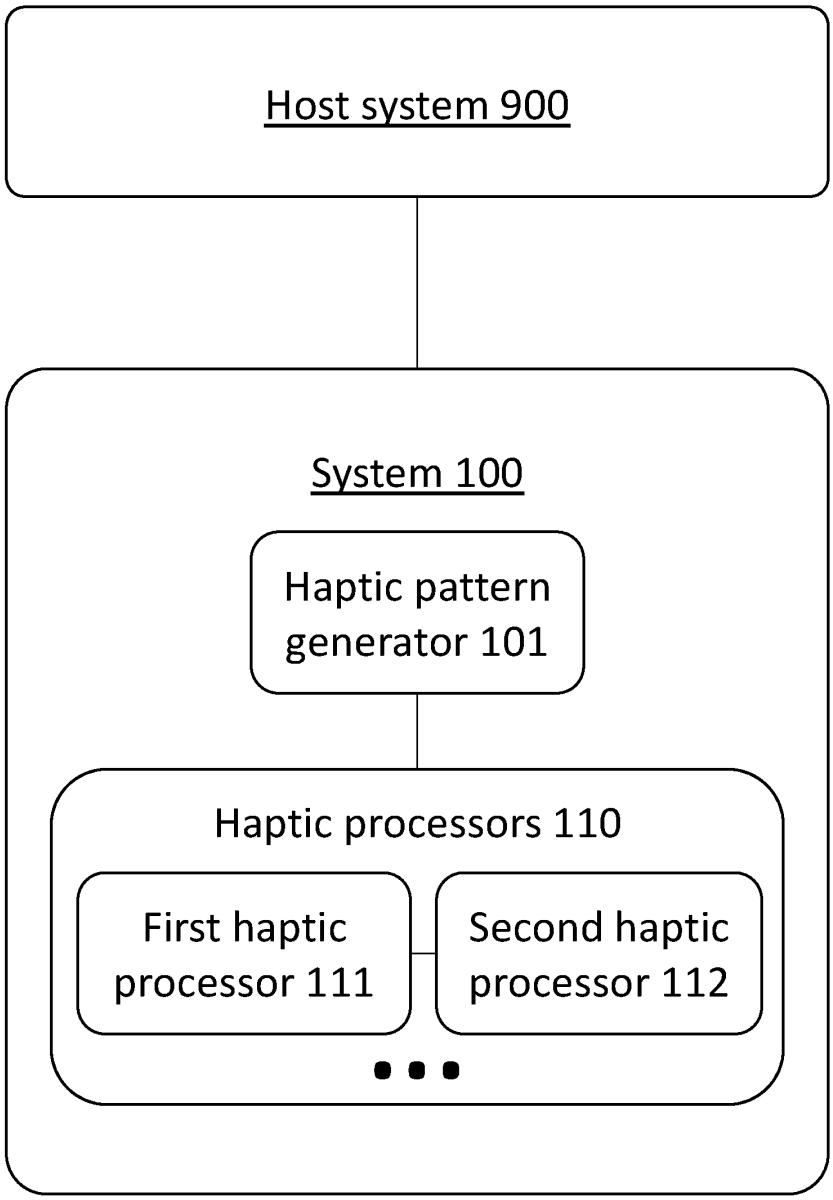
Host system 900
System 100
Haptic pattern generator 101
Haptic processors 110
First haptic processor 111
Second haptic processor 112

FIG. 1

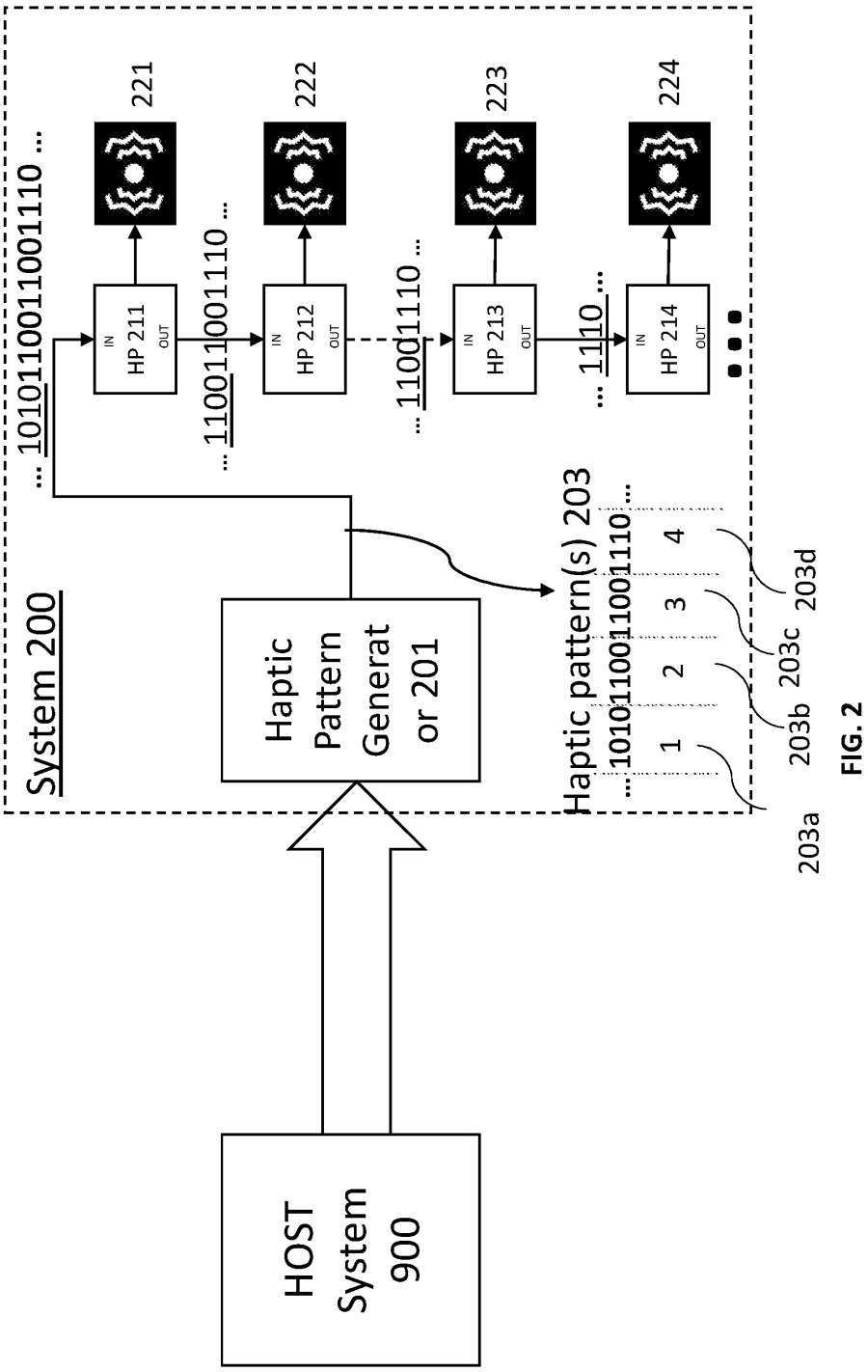
System 200
Haptic Pattern Generator 201
HOST System 900
Haptic pattern(s) 203
...1010110011001110...
1
2
3
4
203a
203b
203c
203d
HP 211
HP 212
HP 213
HP 214
IN
OUT
221
222
223
224
...1010110011001110...
...1100110011110...
...1100111110...
...1110...

FIG. 2

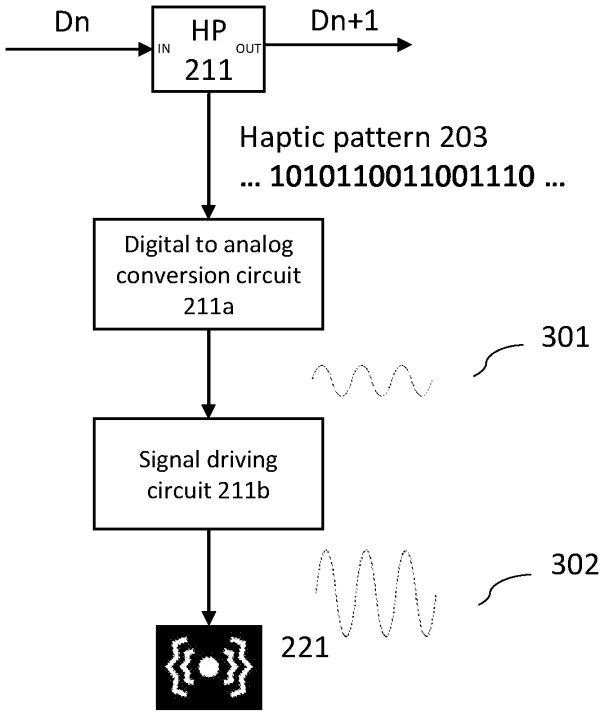
Dn
HP
IN
OUT
211
Dn+1
Haptic pattern 203
... 1010110011001110 ...
Digital to analog conversion circuit 211a
301
Signal driving circuit 211b
302
221

FIG. 3

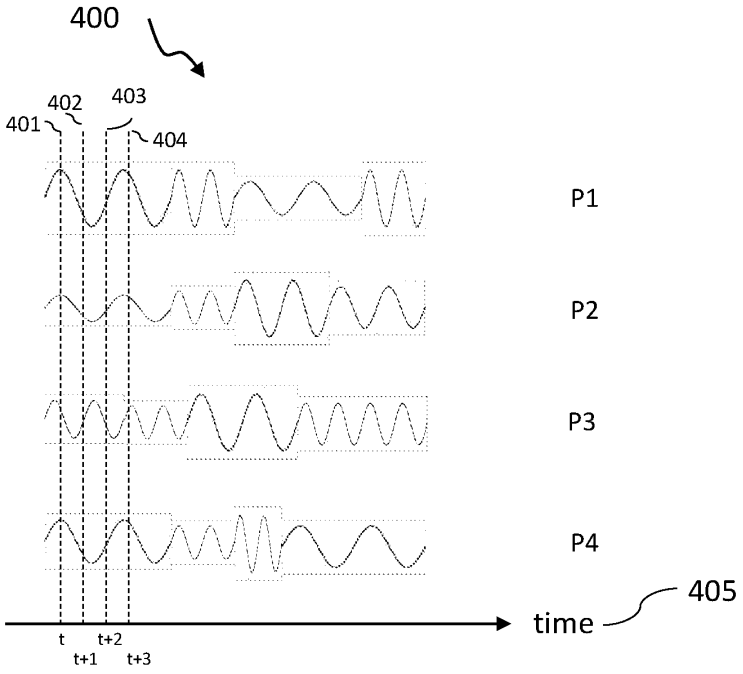
400
401
402
403
404
P1
P2
P3
P4
405
time
t
t+1
t+2
t+3

FIG. 4

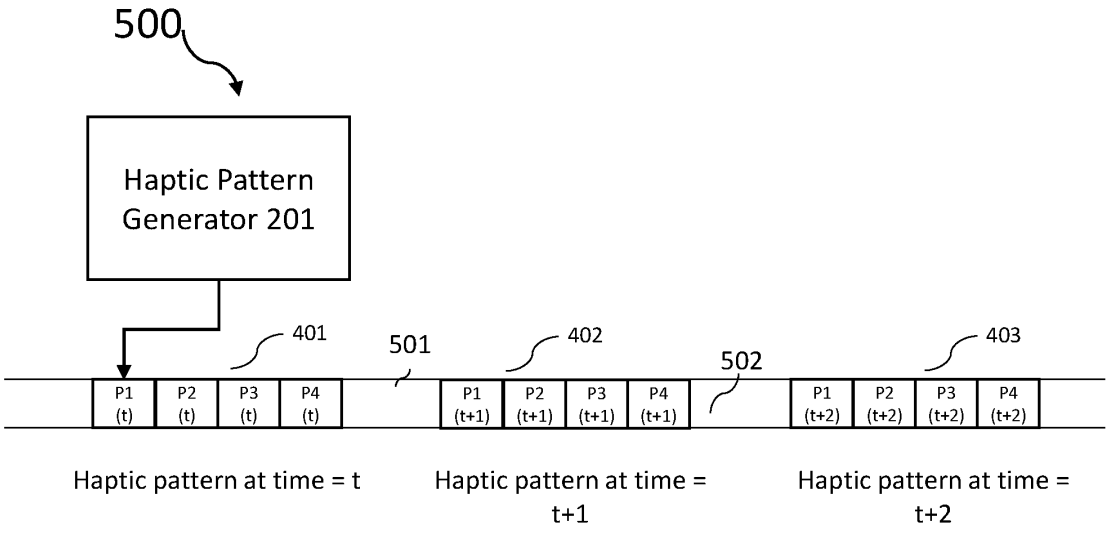
500
Haptic Pattern Generator 201
401
501
402
502
403
P1 (t)
P2 (t)
P3 (t)
P4 (t)
P1 (t+1)
P2 (t+1)
P3 (t+1)
P4 (t+1)
P1 (t+2)
P2 (t+2)
P3 (t+2)
P4 (t+2)
Haptic pattern at time = t
Haptic pattern at time = t+1
Haptic pattern at time = t+2

FIG. 5

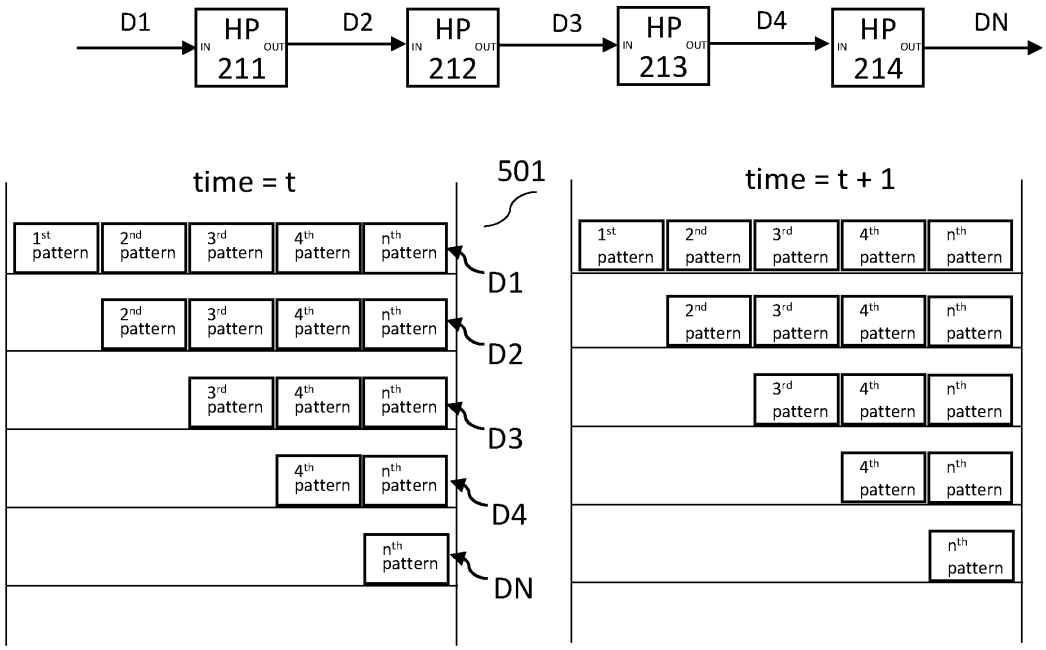
D1
HP
IN
OUT
211
D2
212
D3
213
D4
214
DN
time = t
501
time = t + 1
1st pattern
2nd pattern
3rd pattern
4th pattern
nth pattern
D1
D2
D3
D4
DN

FIG. 6



FIG. 7

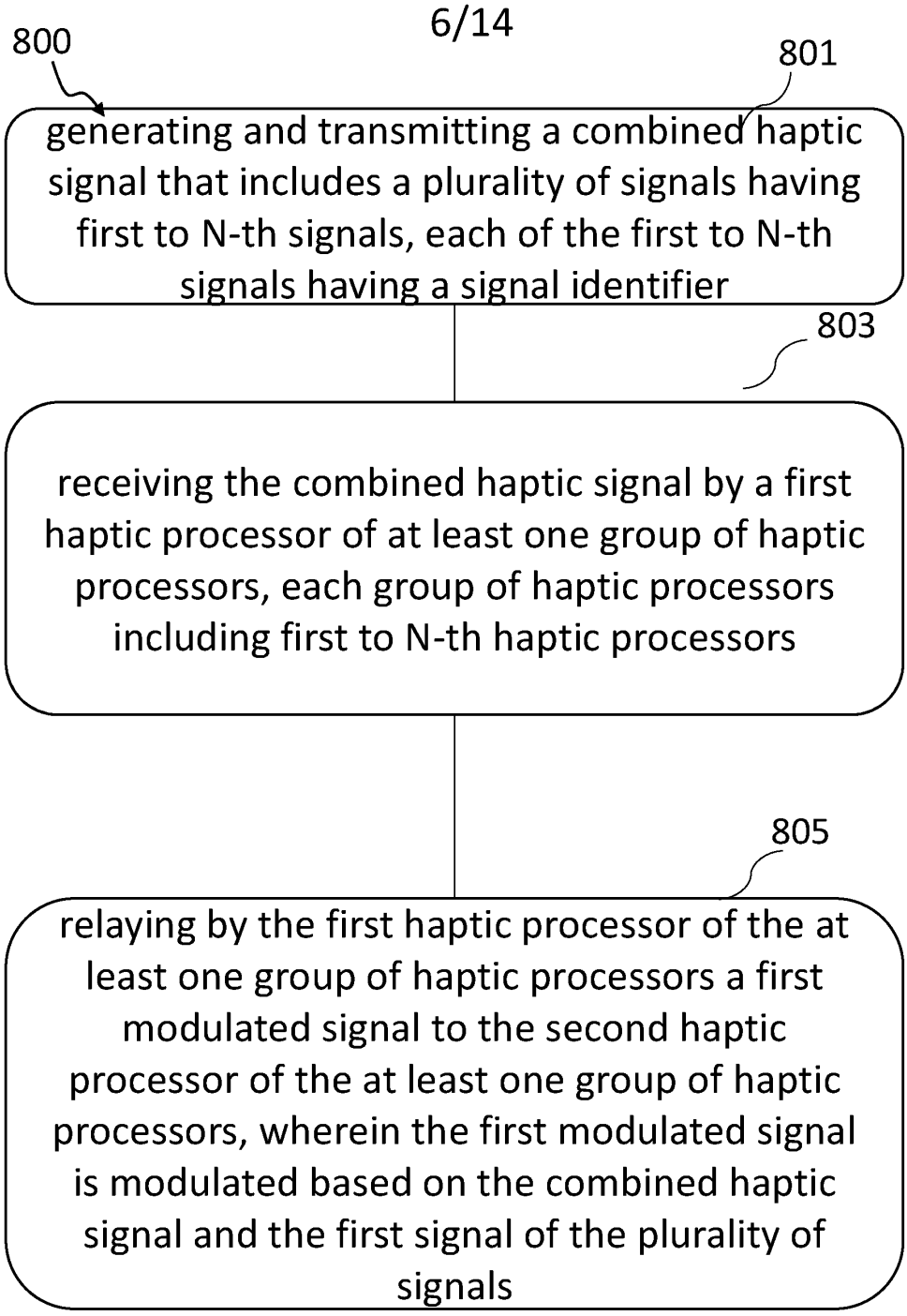
800
801
generating and transmitting a combined haptic signal that includes a plurality of signals having first to N-th signals, each of the first to N-th signals having a signal identifier
803
receiving the combined haptic signal by a first haptic processor of at least one group of haptic processors, each group of haptic processors including first to N-th haptic processors
805
relaying by the first haptic processor of the at least one group of haptic processors a first modulated signal to the second haptic processor of the at least one group of haptic processors, wherein the first modulated signal is modulated based on the combined haptic signal and the first signal of the plurality of signals

FIG. 8

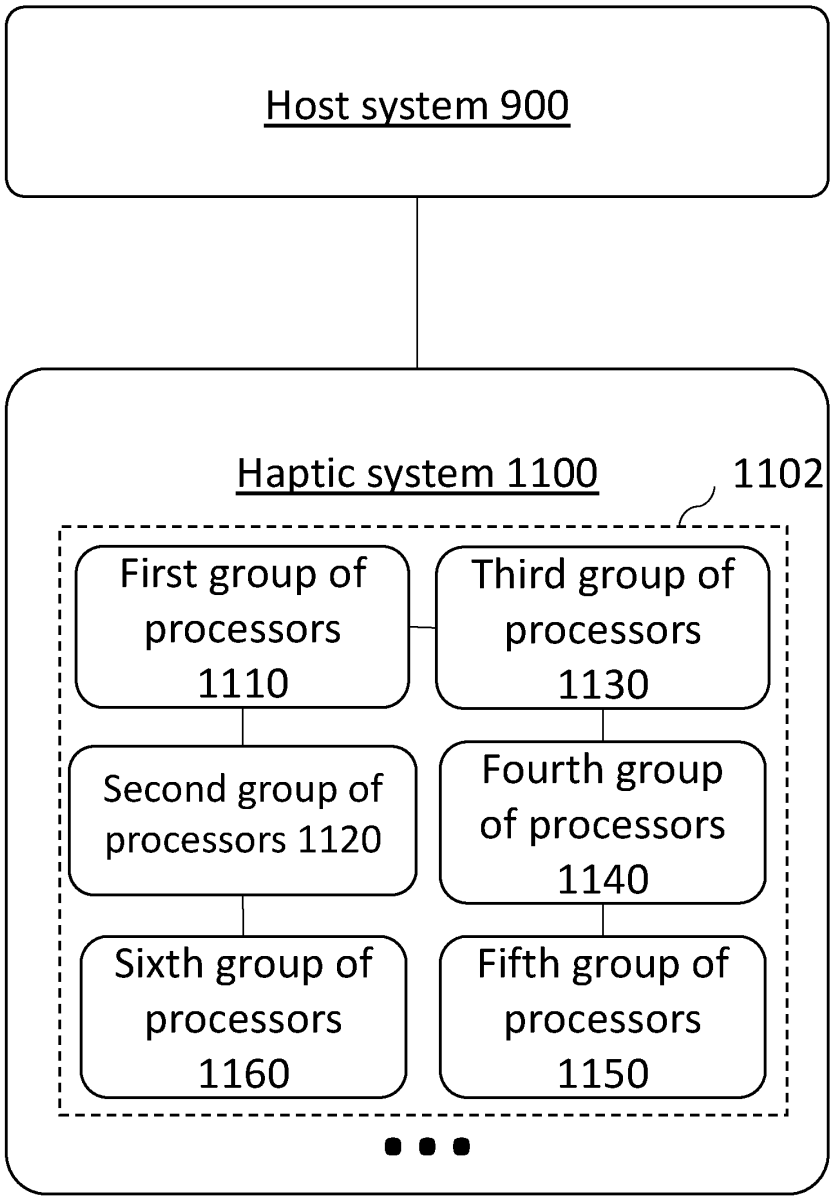
Host system 900
Haptic system 1100
1102
First group of processors 1110
Third group of processors 1130
Second group of processors 1120
Fourth group of processors 1140
Sixth group of processors 1160
Fifth group of processors 1150

FIG. 9

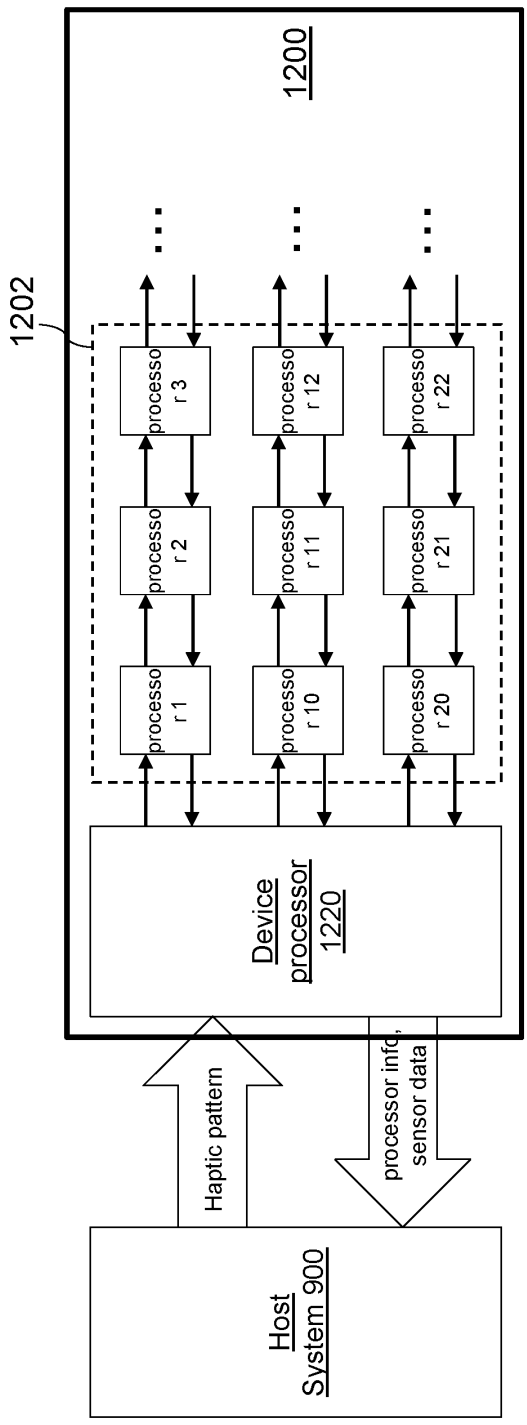
1200
1202
processor 3
processor 12
processor 22
processor 2
processor 11
processor 21
processor 1
processor 10
processor 20
Device processor 1220
Haptic pattern
processor info, sensor data
Host System 900

FIG. 10

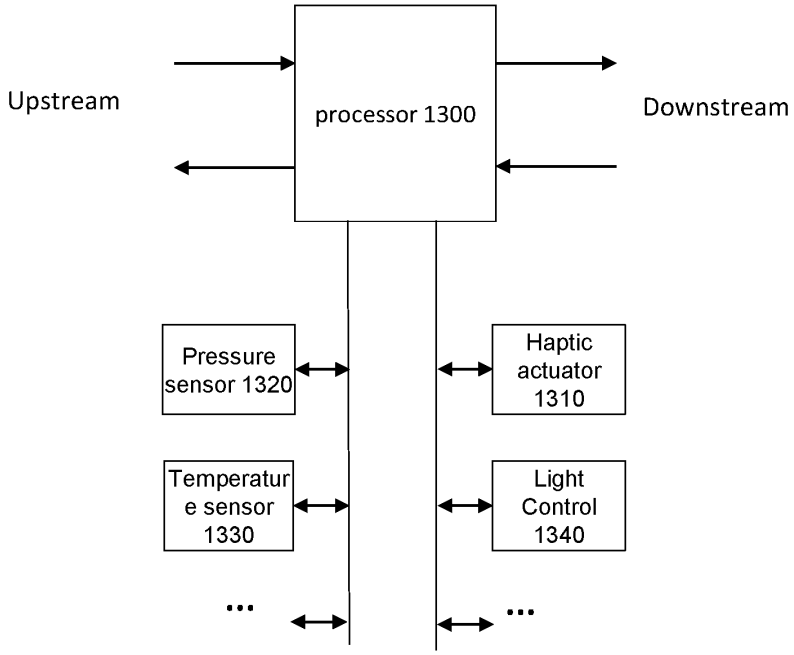
Upstream
processor 1300
Downstream
Pressure sensor 1320
Haptic actuator 1310
Temperatur e sensor 1330
Light Control 1340
...
...

FIG. 11

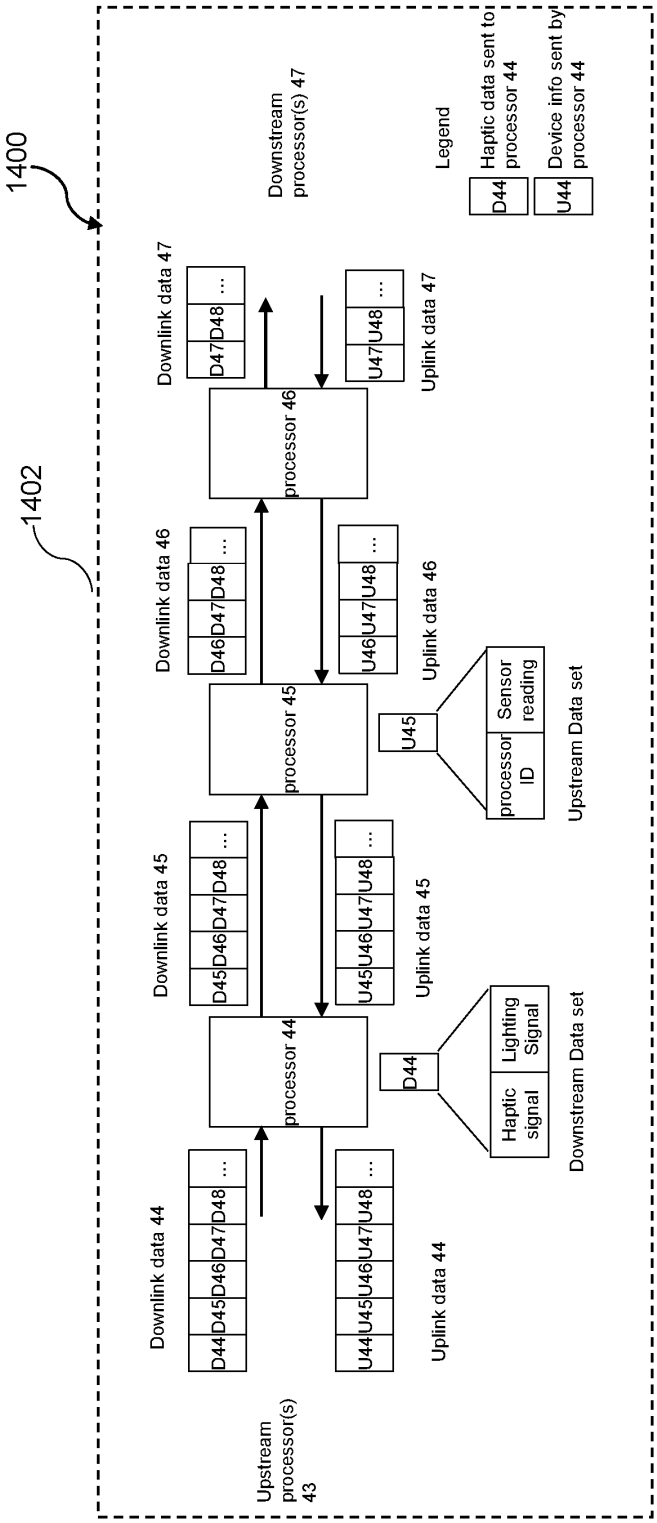
1400
1402
Upstream processor(s) 43
Downstream processor(s) 47
Legend
Haptic data sent to processor 44
Device info sent by processor 44
D44
U44
Downlink data 44
D44 D45 D46 D47 D48 ...
Uplink data 44
U44 U45 U46 U47 U48 ...
processor 44
Downlink data 45
D45 D46 D47 D48 ...
Uplink data 45
U45 U46 U47 U48 ...
processor 45
Downlink data 46
D46 D47 D48 ...
Uplink data 46
U46 U47 U48 ...
processor 46
Downlink data 47
D47 D48 ...
Uplink data 47
U47 U48 ...
D44
Haptic signal
Lighting Signal
Downstream Data set
U45
processor ID
Sensor reading
Upstream Data set

FIG. 12

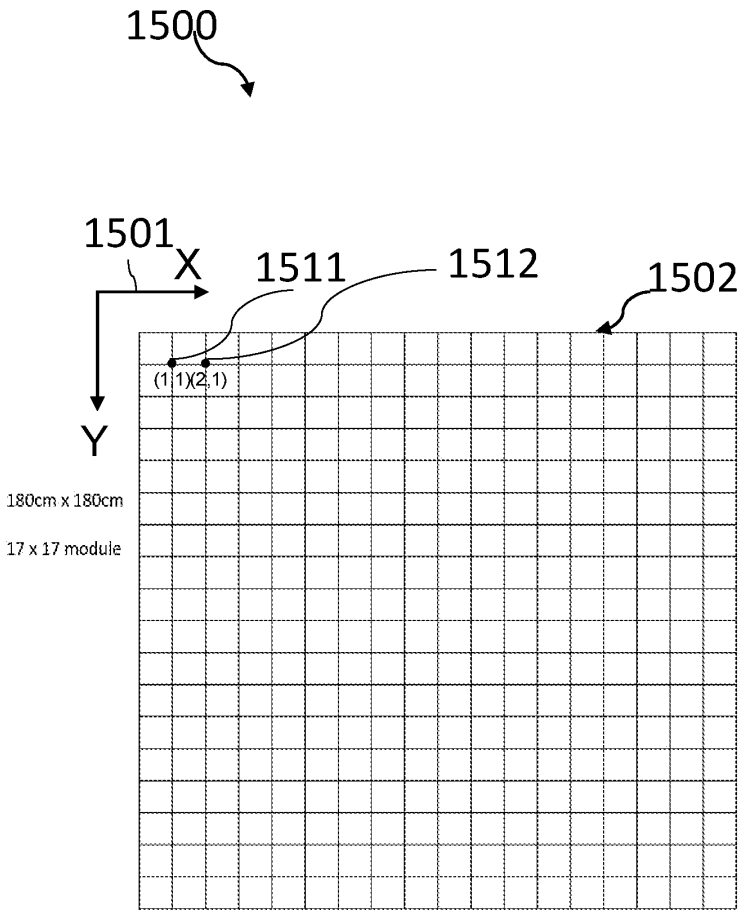

FIG. 13

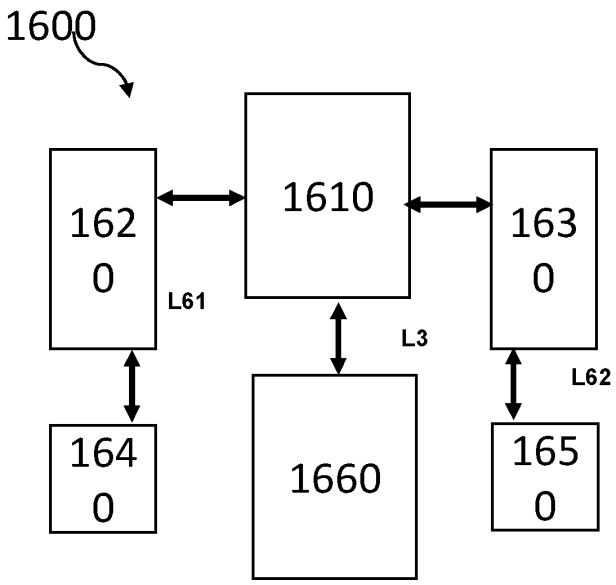
1600
1620
1610
1630
L61
L3
L62
1640
1660
1650

FIG. 14

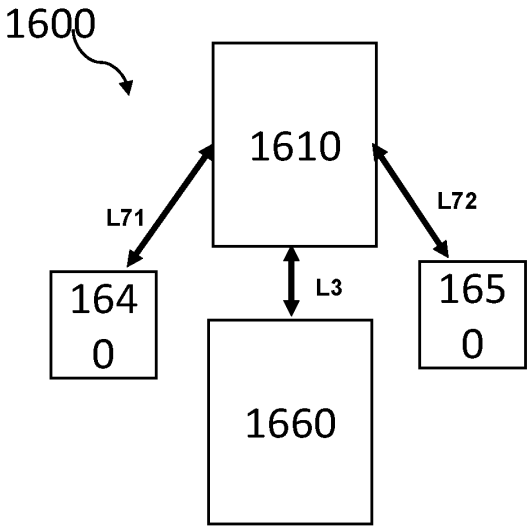
1600
1610
L71
L72
L3
1640
1650
1660

FIG. 15

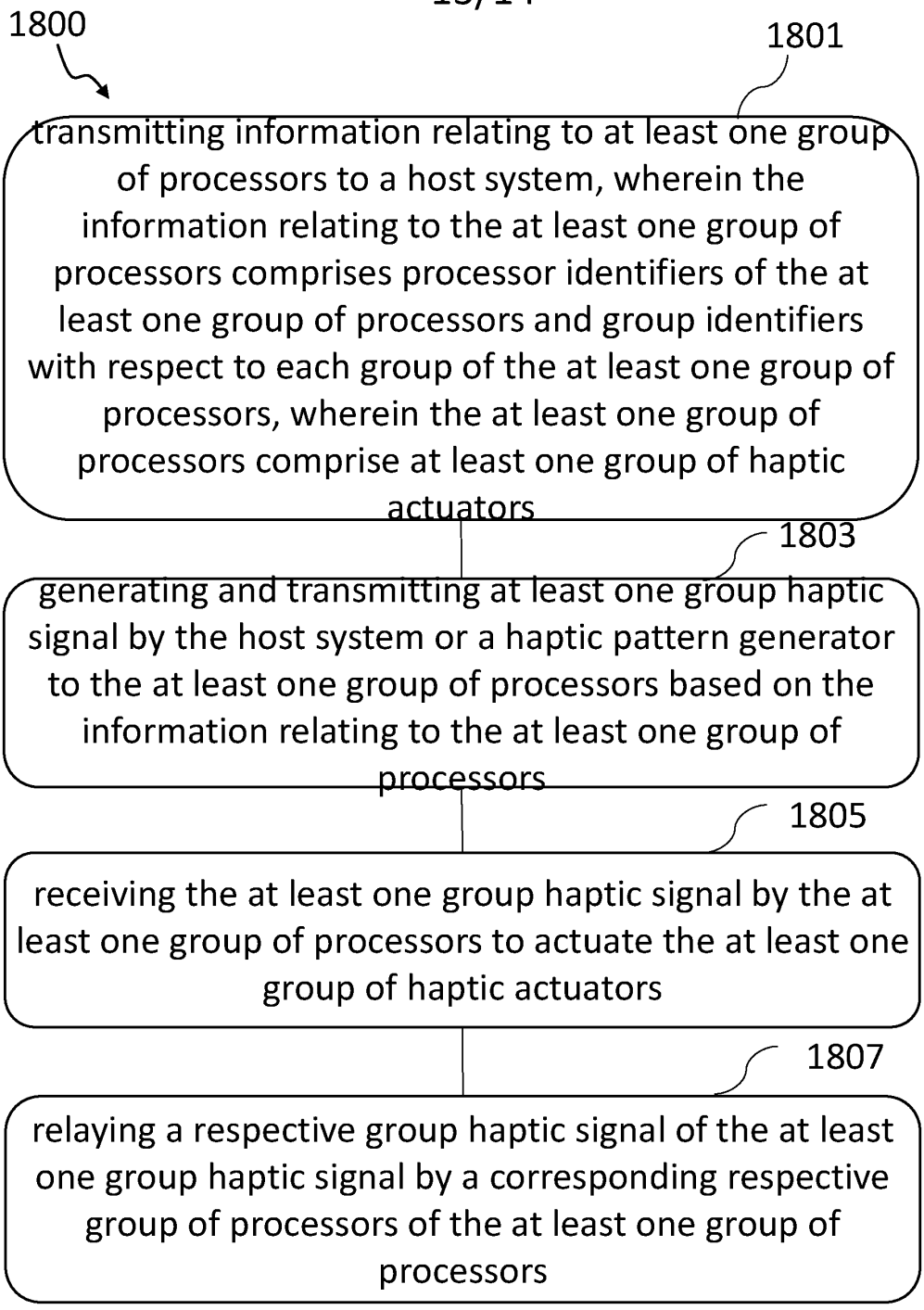
1800
1801
transmitting information relating to at least one group of processors to a host system, wherein the information relating to the at least one group of processors comprises processor identifiers of the at least one group of processors and group identifiers with respect to each group of the at least one group of processors, wherein the at least one group of processors comprise at least one group of haptic actuators
1803
generating and transmitting at least one group haptic signal by the host system or a haptic pattern generator to the at least one group of processors based on the information relating to the at least one group of processors
1805
receiving the at least one group haptic signal by the at least one group of processors to actuate the at least one group of haptic actuators
1807
relaying a respective group haptic signal of the at least one group haptic signal by a corresponding respective group of processors of the at least one group of processors

FIG. 16

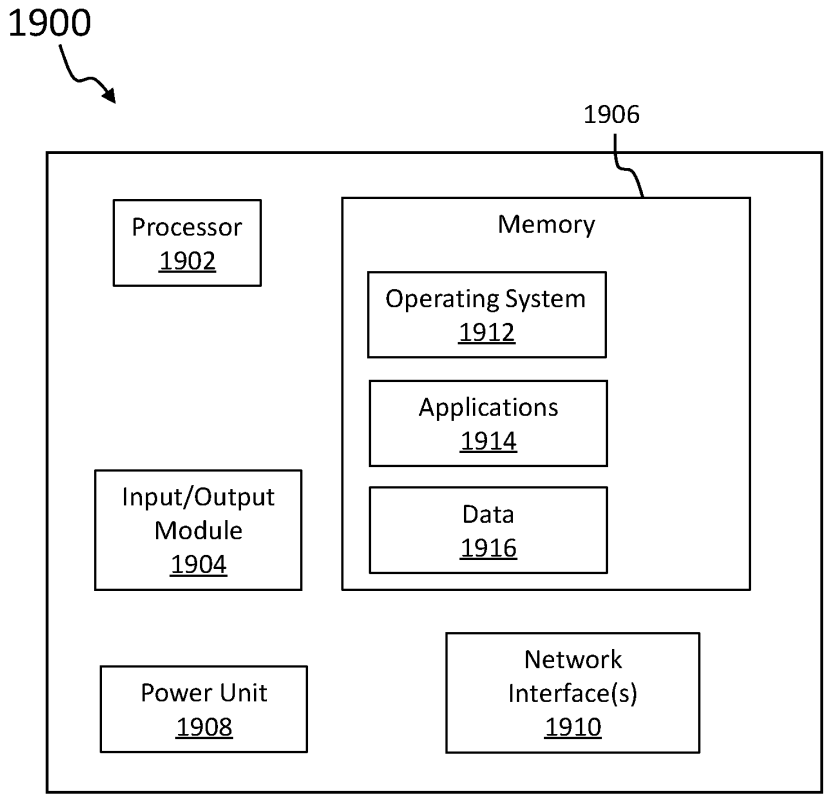
1900
1906
Processor
1902
Memory
Operating System
1912
Applications
1914
Data
1916
Input/Output
Module
1904
Power Unit
1908
Network
Interface(s)
1910

FIG. 17