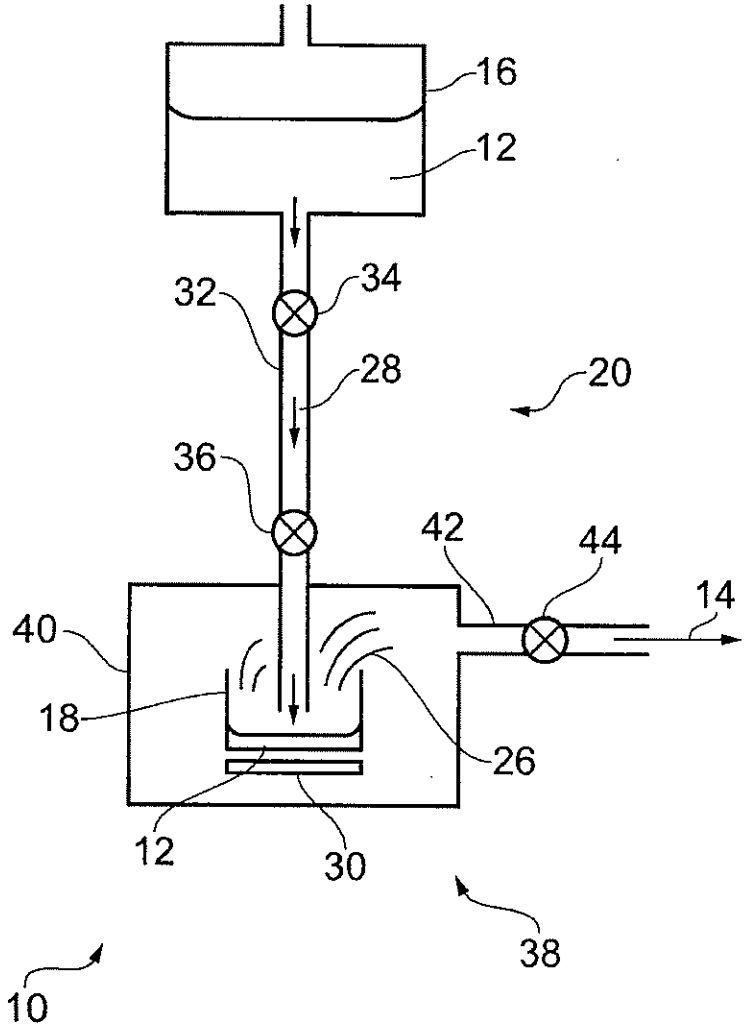

FIG. 1

METHOD STEPS	Valve 34	Valve 36	Valve 44
Evacuation	CLOSED	OPEN	OPEN
Atmosphere	CLOSED	CLOSED	CLOSED/ OPEN
Filling Internal Space	OPEN	CLOSED	CLOSED/ OPEN
Filling Second Container	CLOSED	OPEN	CLOSED
Active Species Delivery	CLOSED	CLOSED	OPEN

FIG. 2