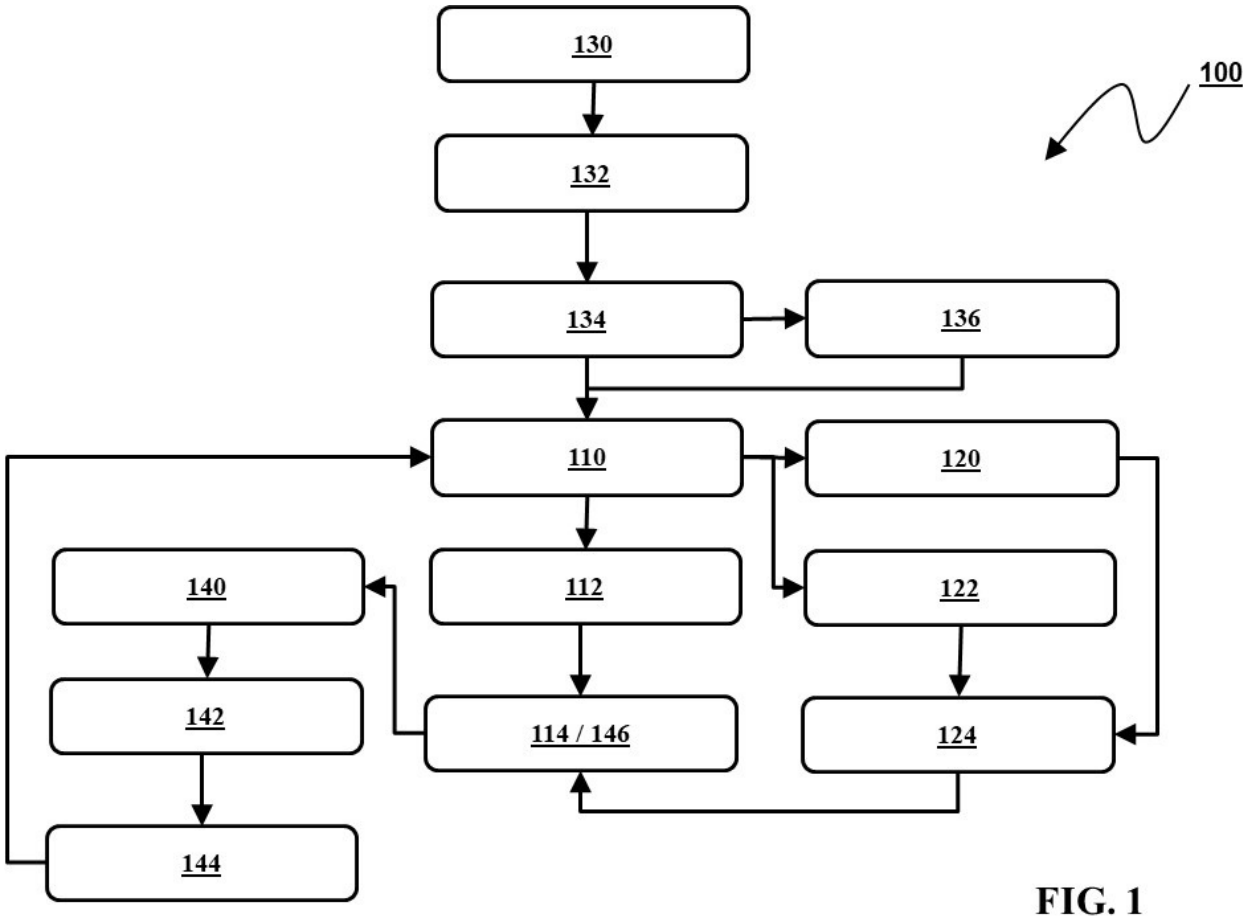

FIG. 1

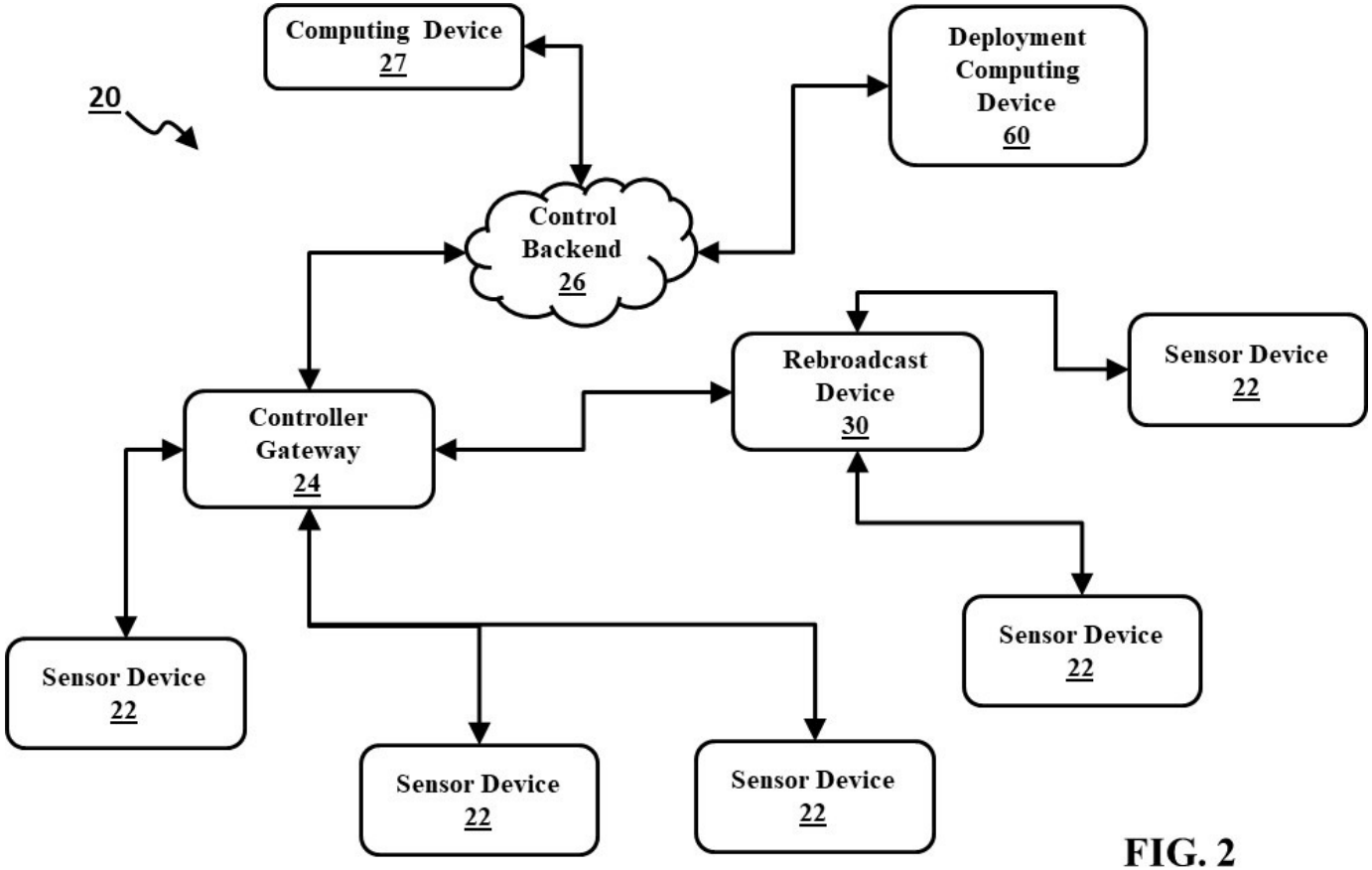
20
Computing Device
27
Deployment
Computing
Device
60
Control
Backend
26
Rebroadcast
Device
30
Sensor Device
22
Controller
Gateway
24
Sensor Device
22
Sensor Device
22
Sensor Device
22
Sensor Device
22

FIG. 2

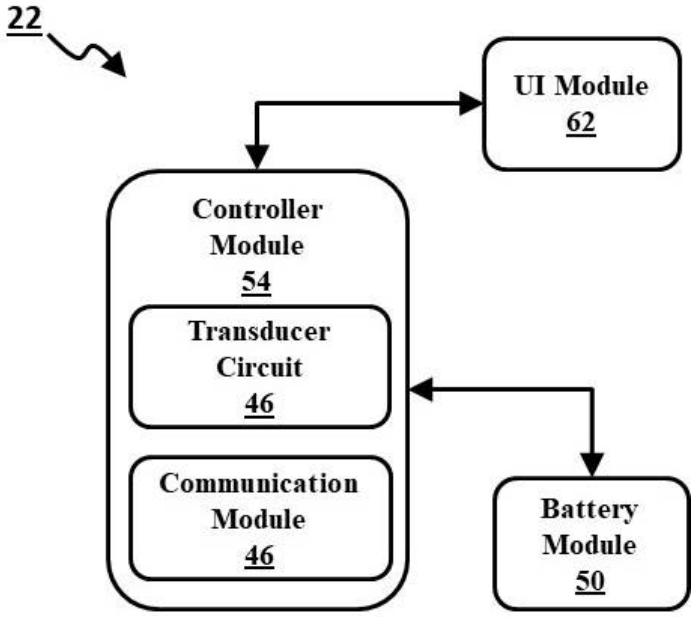
22
UI Module
62
Controller
Module
54
Transducer
Circuit
46
Communication
Module
46
Battery
Module
50

FIG. 3

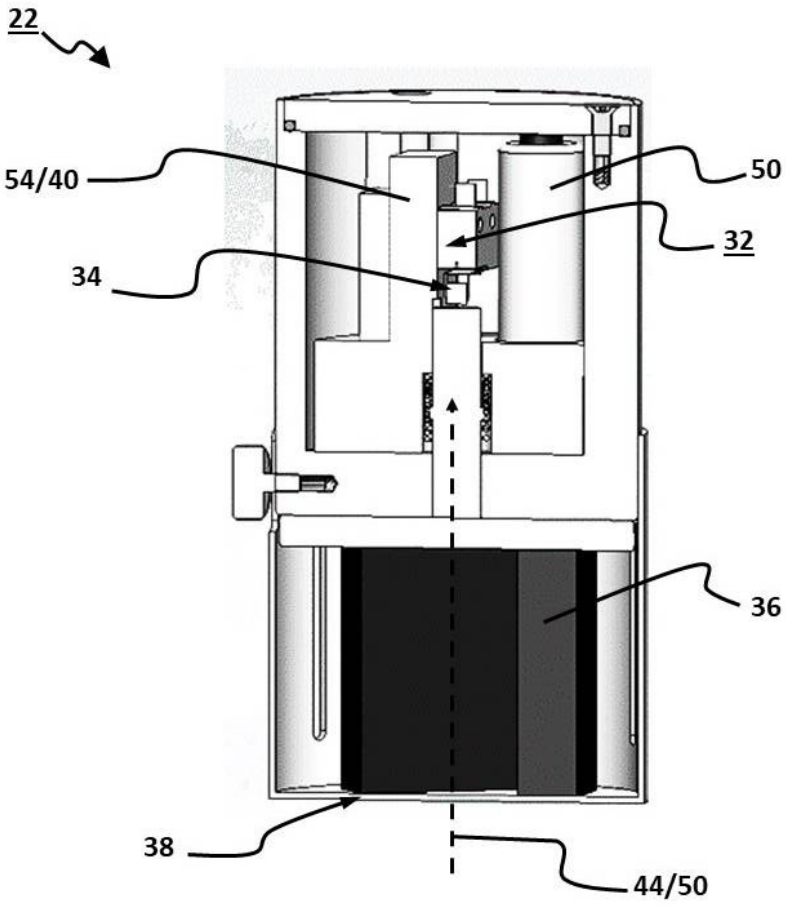

FIG. 4