FIG. 1

<CONVENTIONAL EXAMPLE>

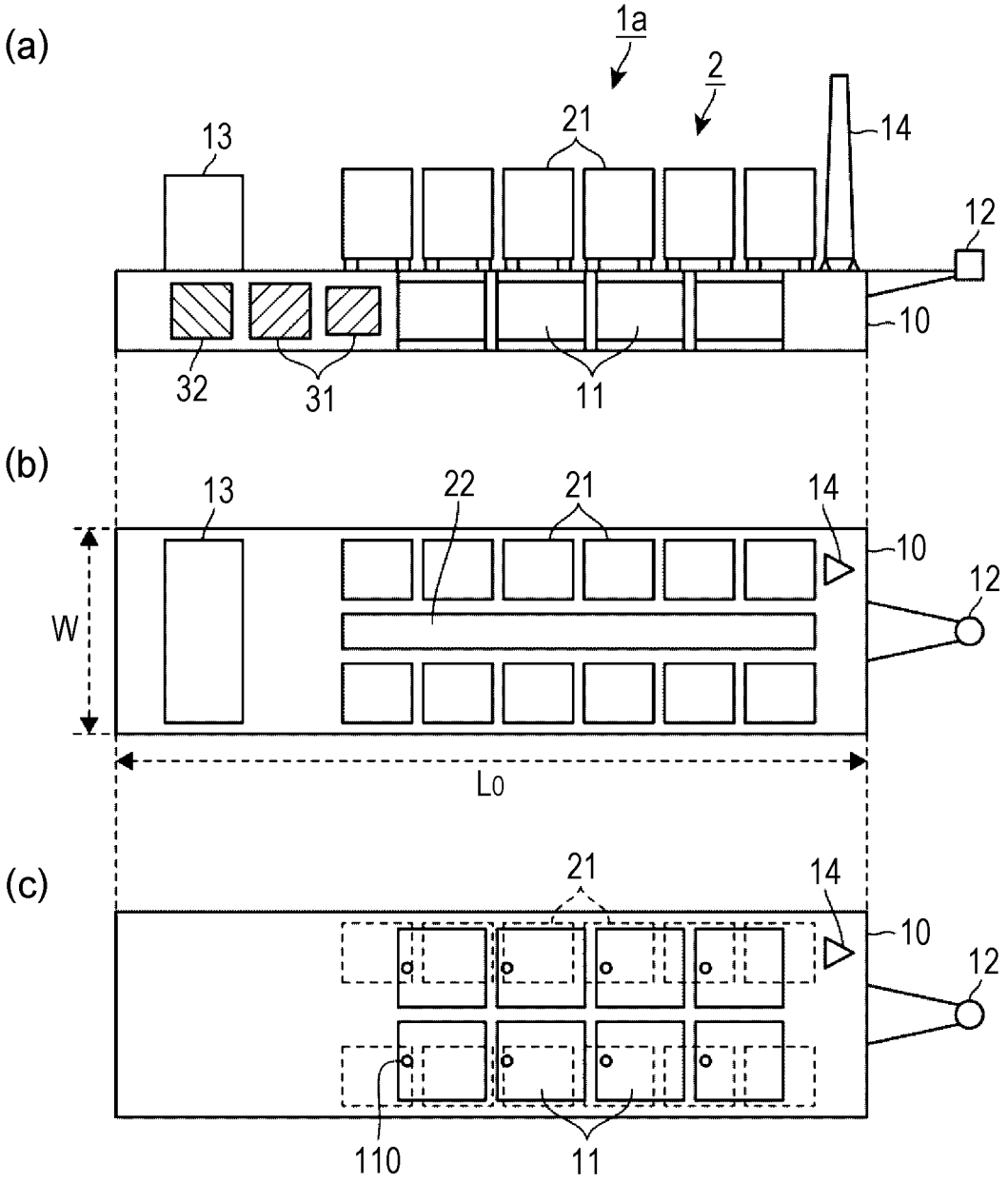

FIG. 2

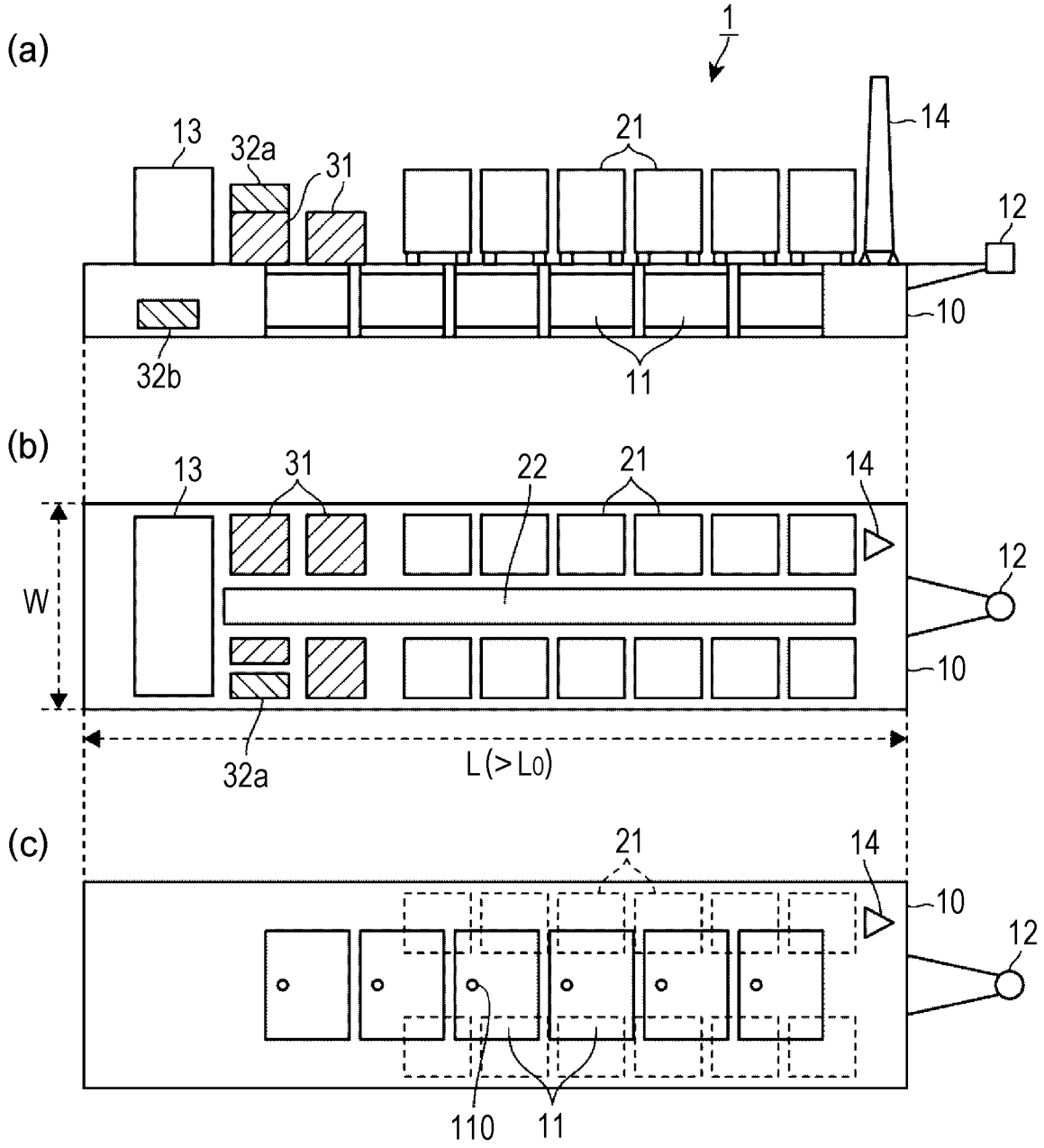
(a)
1
13
32a
31
21
14
12
10
32b
11
(b)
13
31
22
21
14
12
W
10
32a
L (> L0)
(c)
21
14
10
12
110
11

FIG. 3

