(12) INTERNATIONAL APPLICATION PUBLISHED UNDER THE PATENT COOPERATION TREATY (PCT)

(19) World Intellectual Property Organization
International Bureau

(43) International Publication Date
25 September 2025 (25.09.2025)

WIPO | PCT

(10) International Publication Number
WO 2025/199023 A1

(51) International Patent Classification:
H01L 21/02 (2006.01) *H01L 21/762* (2006.01)

(21) International Application Number:
PCT/US2025/020218

(22) International Filing Date:
17 March 2025 (17.03.2025)

(25) Filing Language: English

(26) Publication Language: English

(30) Priority Data:
18/607,756 18 March 2024 (18.03.2024) US

(71) Applicant: **GLOBALWAFERS CO., LTD.** [CN/CN]; No. 8, Industrial East Road 2, Science-Based Industrial Park, Hsinchu City, 30075 (TW).

(72) Inventors: **HUDSON, Carissima M.**; 501 Pearl Drive, St. Peters, Missouri 63376 (US). **RYU, JaeWoo**; 501 Pearl Drive, St. Peters, Missouri 63376 (US). **SEACRIST, Michael R.**; 501 Pearl Drive, St. Peters, Missouri 63376 (US). **LIBBERT, Jeffrey L.**; 501 Pearl Drive, St. Peters, Missouri 63376 (US).

(74) Agent: **COYLE, JR., Patrick J.** et al.; ARMSTRONG TEASDALE LLP, 7700 Forsyth Blvd, Suite 1800, Saint Louis, Missouri 63105 (US).

(81) Designated States *(unless otherwise indicated, for every kind of national protection available)*: AE, AG, AL, AM, AO, AT, AU, AZ, BA, BB, BG, BH, BN, BR, BW, BY, BZ, CA, CH, CL, CN, CO, CR, CU, CV, CZ, DE, DJ, DK, DM, DO, DZ, EC, EE, EG, ES, FI, GB, GD, GE, GH, GM, GT, HN, HR, HU, ID, IL, IN, IQ, IR, IS, IT, JM, JO, JP, KE, KG, KH, KN, KP, KR, KW, KZ, LA, LC, LK, LR, LS, LU, LY, MA, MD, MG, MK, MN, MU, MW, MX, MY, MZ, NA, NG, NI, NO, NZ, OM, PA, PE, PG, PH, PL, PT, QA, RO, RS, RU, RW, SA, SC, SD, SE, SG, SK, SL, ST, SV, SY, TH, TJ, TM, TN, TR, TT, TZ, UA, UG, US, UY, UZ, VC, VN, WS, ZA, ZM, ZW.

(84) Designated States *(unless otherwise indicated, for every kind of regional protection available)*: ARIPO (BW, CV, GH, GM, KE, LR, LS, MW, MZ, NA, RW, SC, SD, SL, ST, SZ, TZ, UG, ZM, ZW), Eurasian (AM, AZ, BY, KG, KZ, RU, TJ, TM), European (AL, AT, BE, BG, CH, CY, CZ, DE, DK, EE, ES, FI, FR, GB, GR, HR, HU, IE, IS, IT, LT, LU, LV, MC, ME, MK, MT, NL, NO, PL, PT, RO, RS, SE, SI, SK, SM, TR), OAPI (BF, BJ, CF, CG, CI, CM, GA, GN, GQ, GW, KM, ML, MR, NE, SN, TD, TG).

(54) Title: RECLAIMABLE DONOR SUBSTRATES FOR USE IN PREPARING MULTIPLE SILICON-ON-INSULATOR STRUCTURES

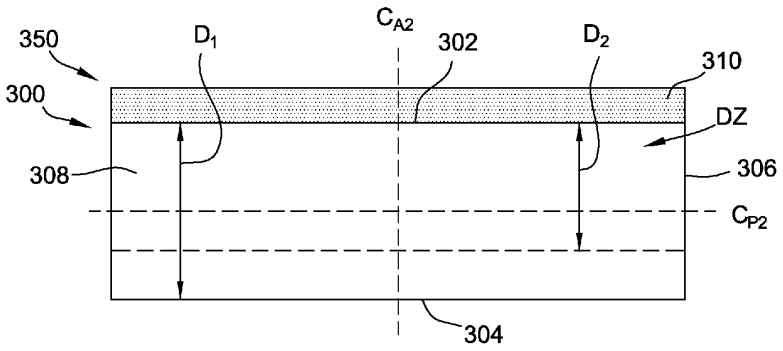

FIG. 5

(57) Abstract: A donor structure for use in preparing silicon-on-insulator structures includes a donor substrate made of single crystal silicon and a dielectric layer formed on a front surface of the donor substrate. The donor substrate has an interstitial oxygen concentration of less than $7.5x10^{17}$ atoms/cm^3 and includes a denuded zone extending from the front surface of the donor substrate a denuded zone depth of at least 25 μm. The denuded zone is characterized by non-detectable oxygen precipitates measured by light scattering tomography. The denuded zone depth enables the donor structure to be reclaimed for preparing multiple silicon-on-insulator structures.

[Continued on next page]

WO 2025/199023 A1

Published:

— *with international search report (Art. 21(3))*

— *before the expiration of the time limit for amending the claims and to be republished in the event of receipt of amendments (Rule 48.2(h))*