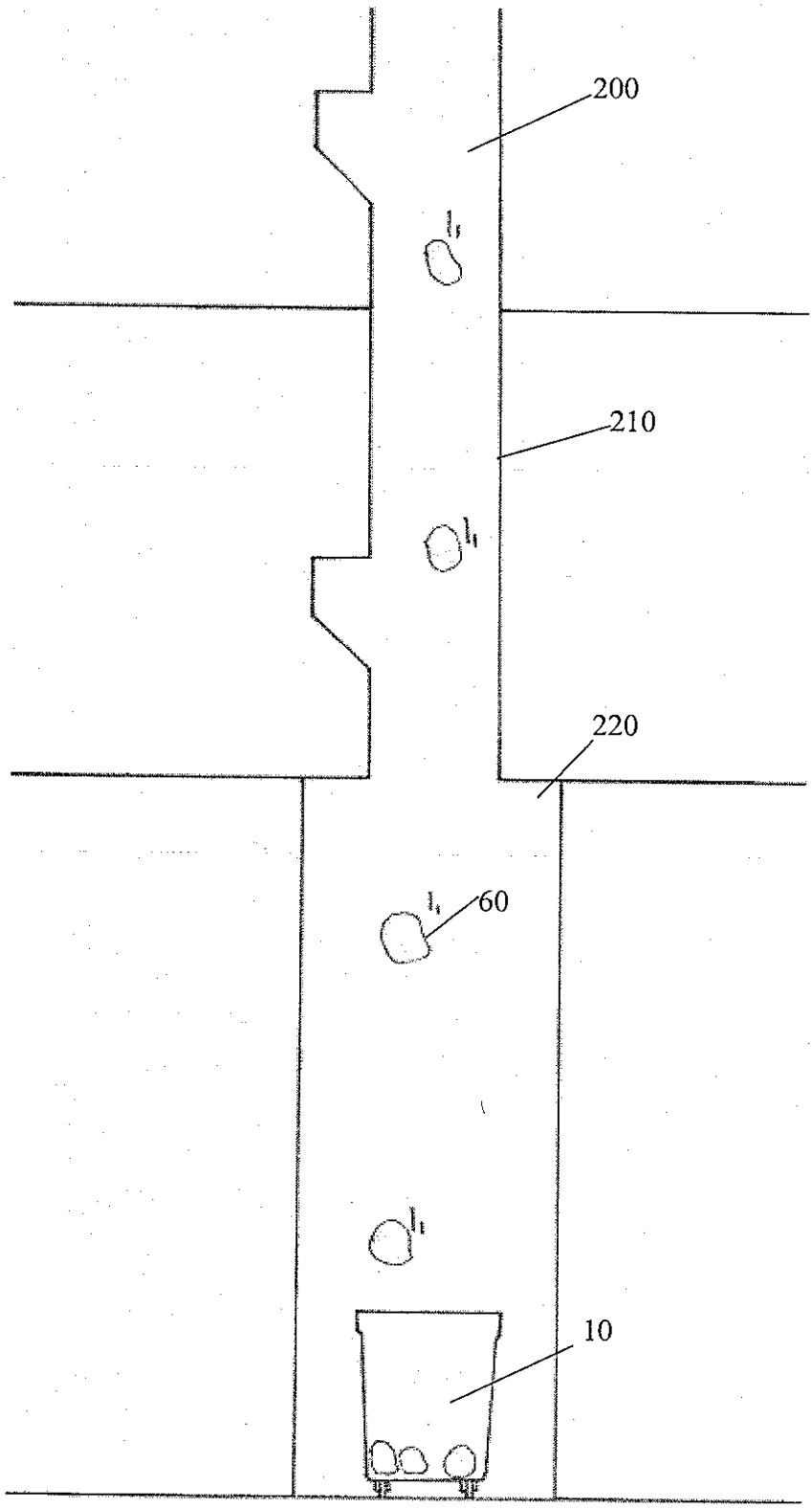

FIGURE 1 (PRIOR ART)

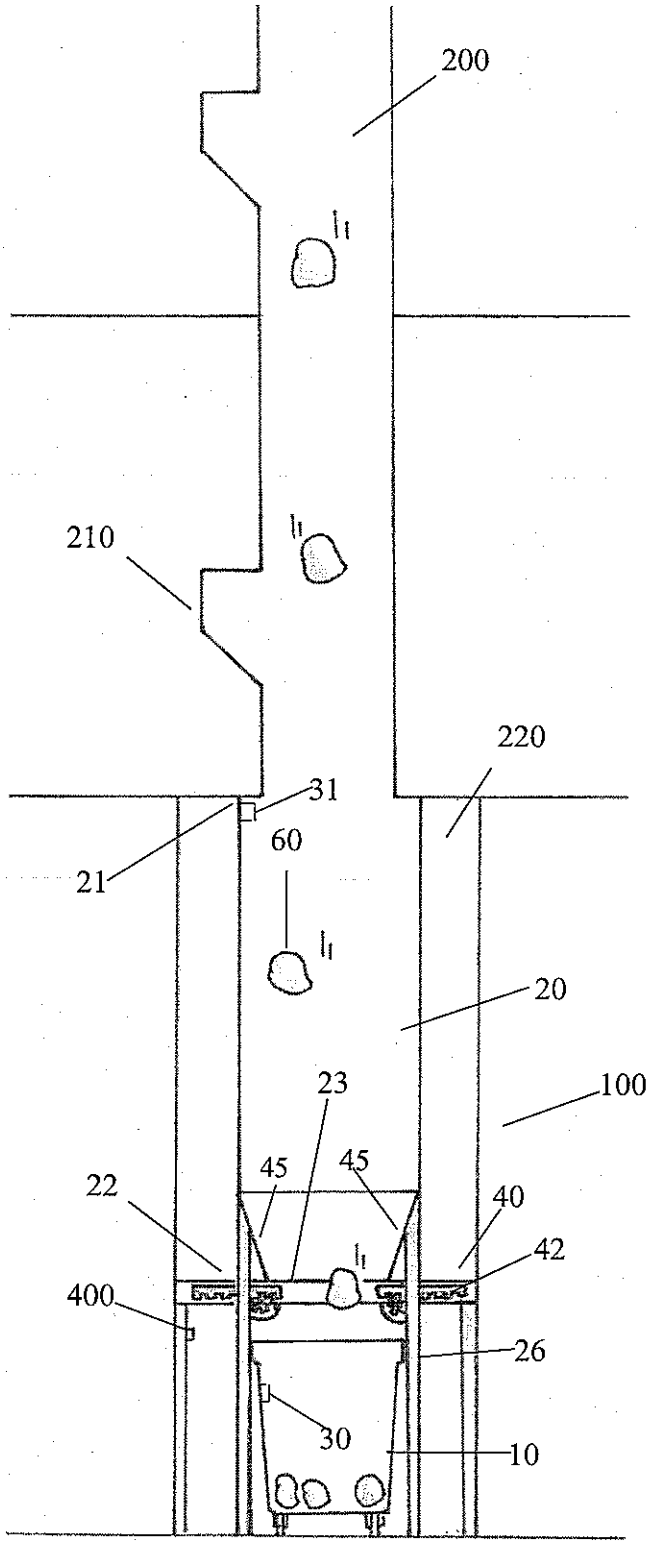

FIGURE 2

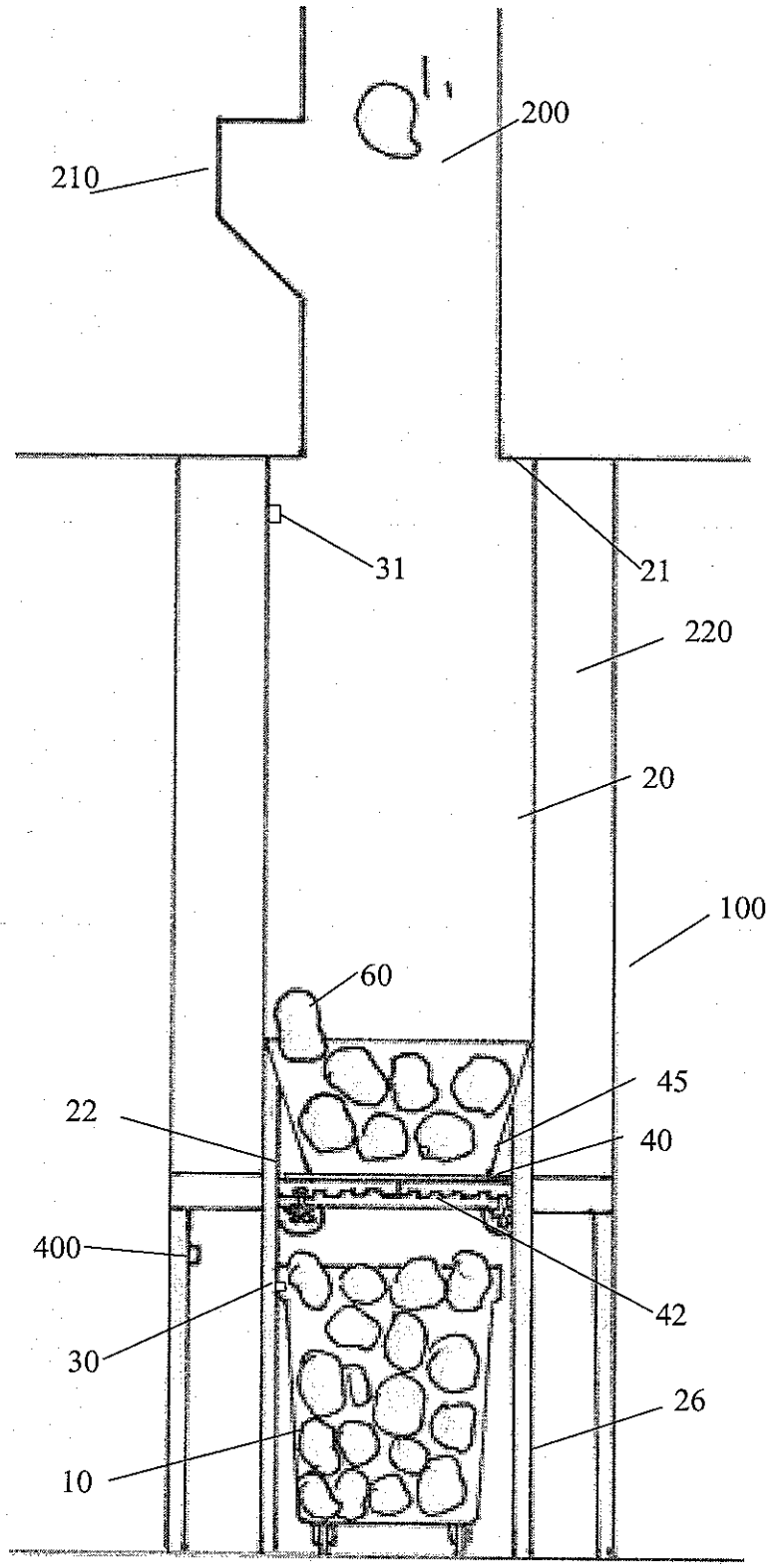

FIGURE 3

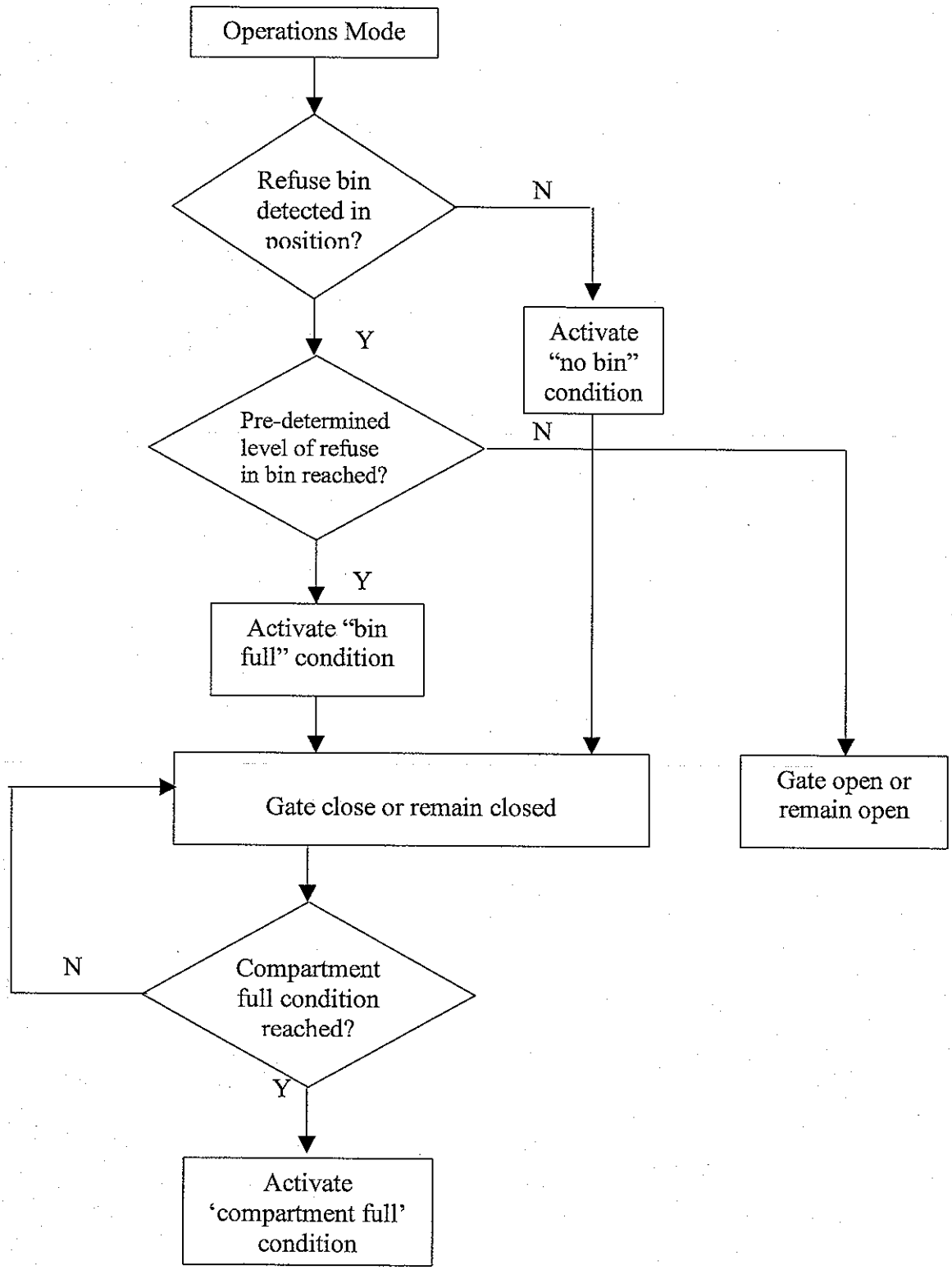
Operations Mode
Refuse bin detected in position?
N
Y
Activate "no bin" condition
Pre-determined level of refuse in bin reached?
N
Y
Activate "bin full" condition
Gate close or remain closed
Gate open or remain open
N
Compartment full condition reached?
Y
Activate 'compartment full' condition

FIGURE 4A

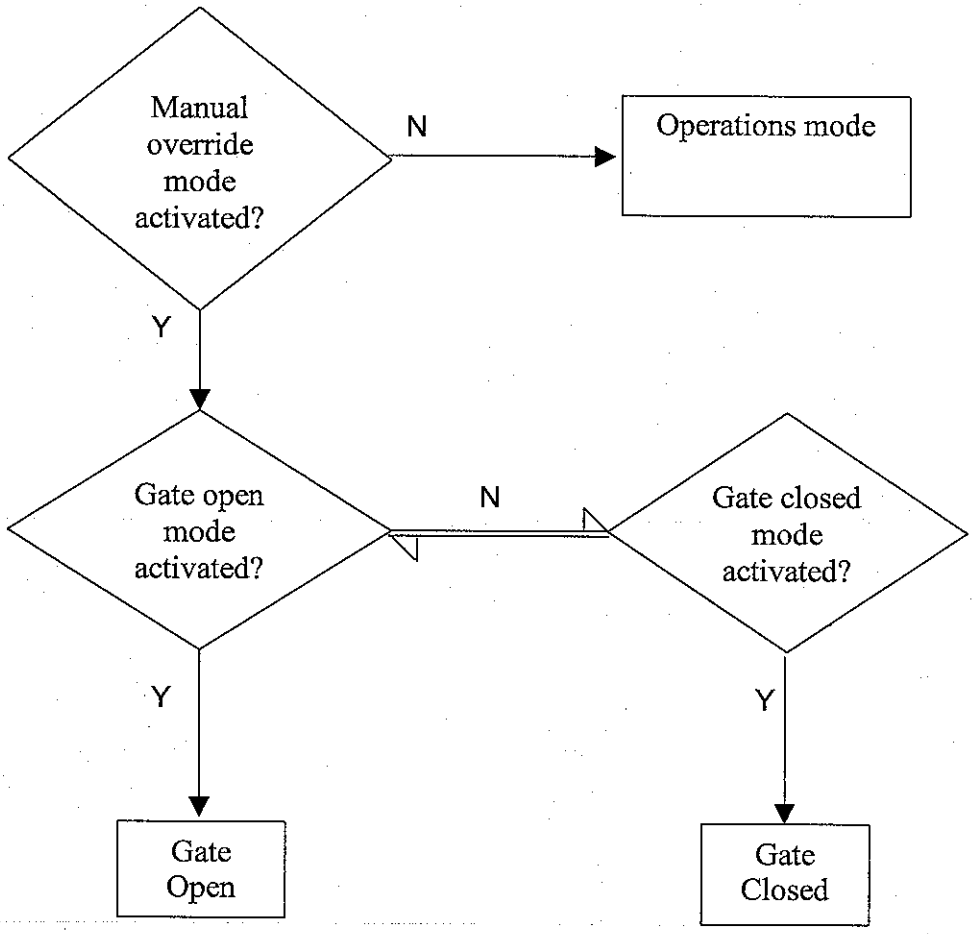
Manual override mode activated?
N
Operations mode
Y
Gate open mode activated?
N
Gate closed mode activated?
Y
Y
Gate Open
Gate Closed

Figure 4B

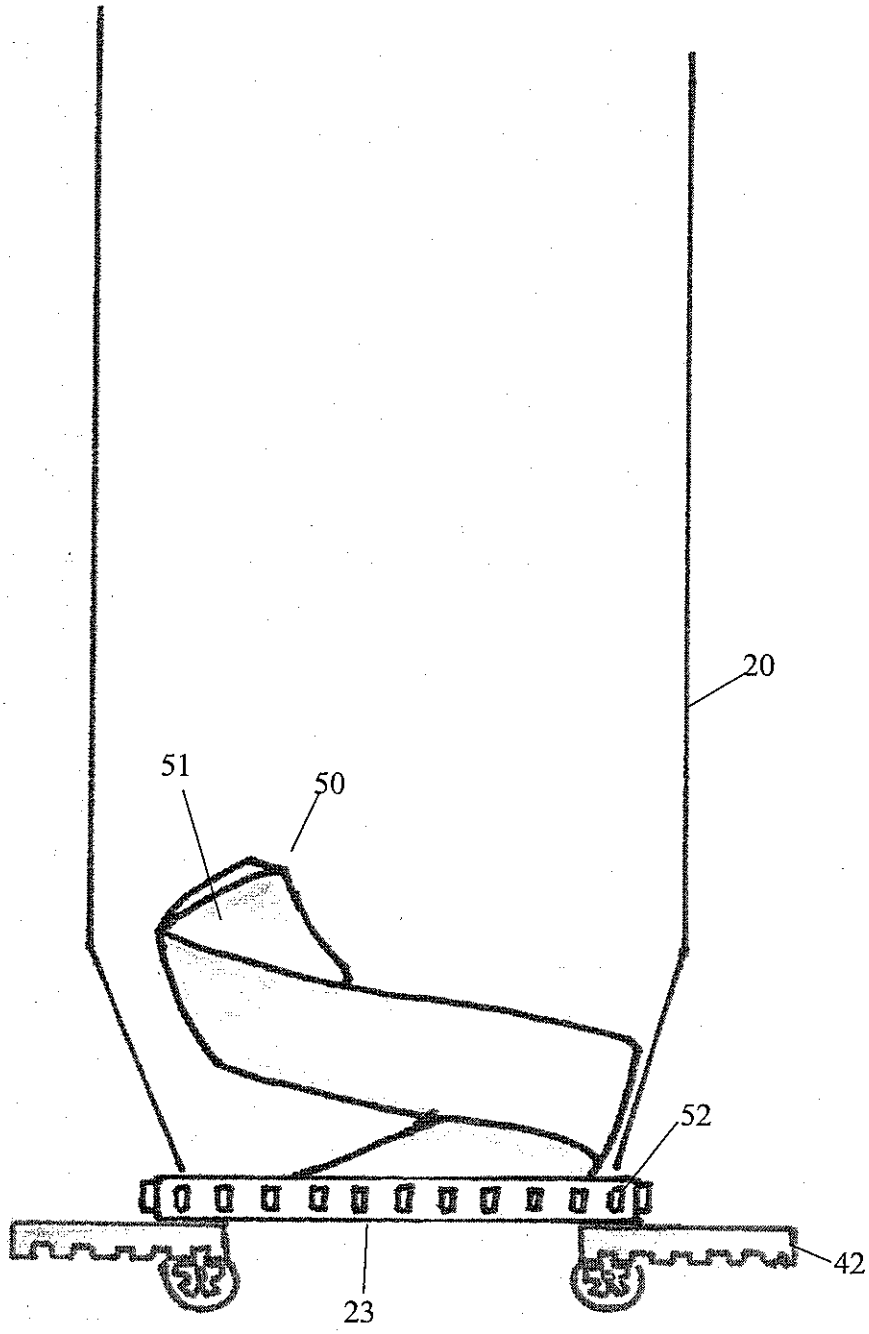

FIGURE 5

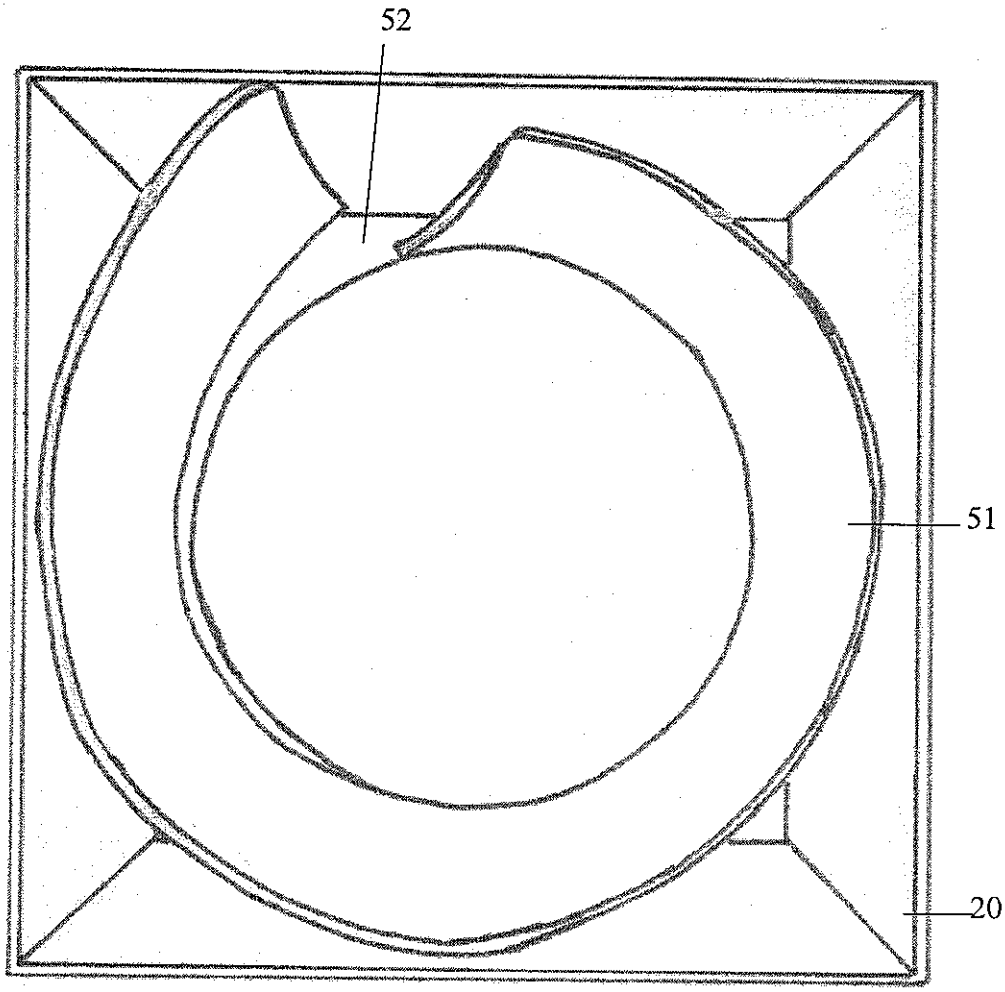

FIGURE 6

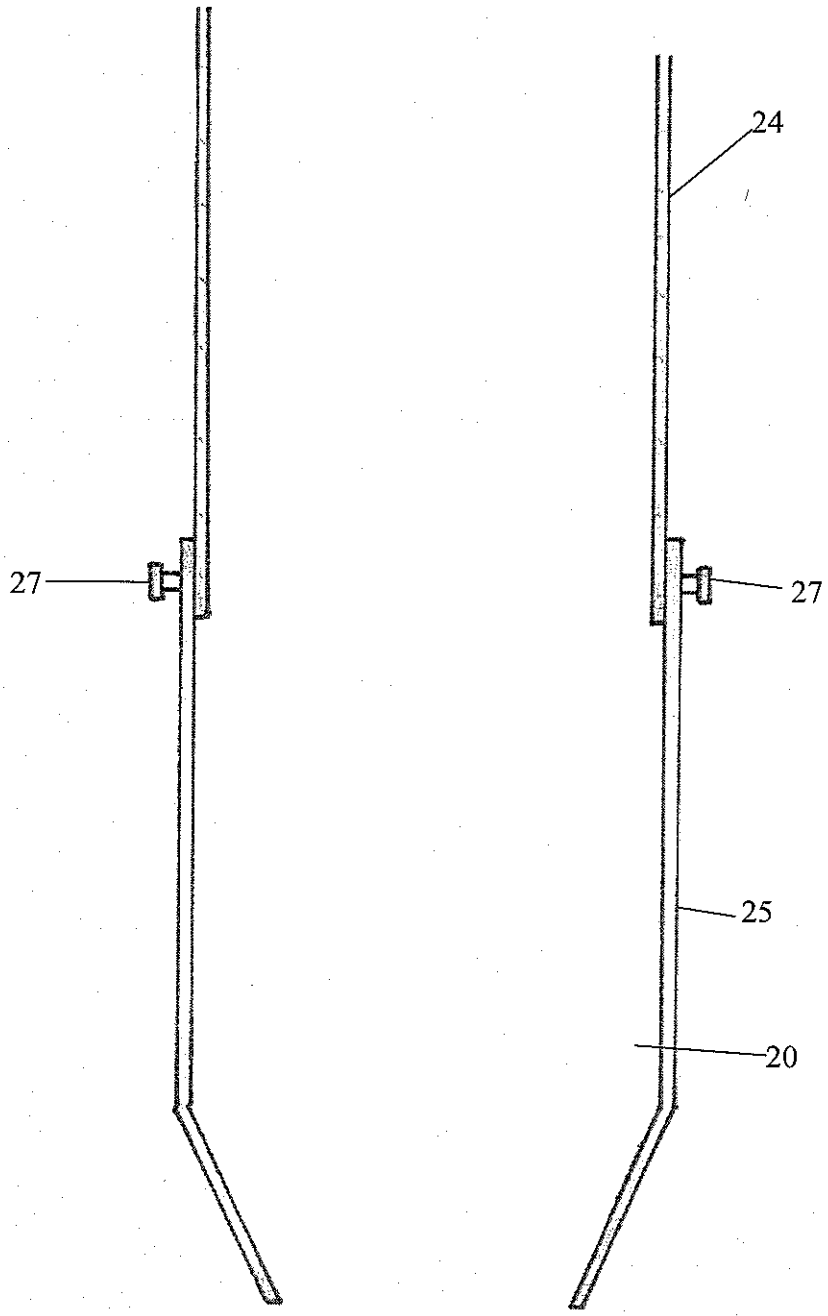

FIGURE 7