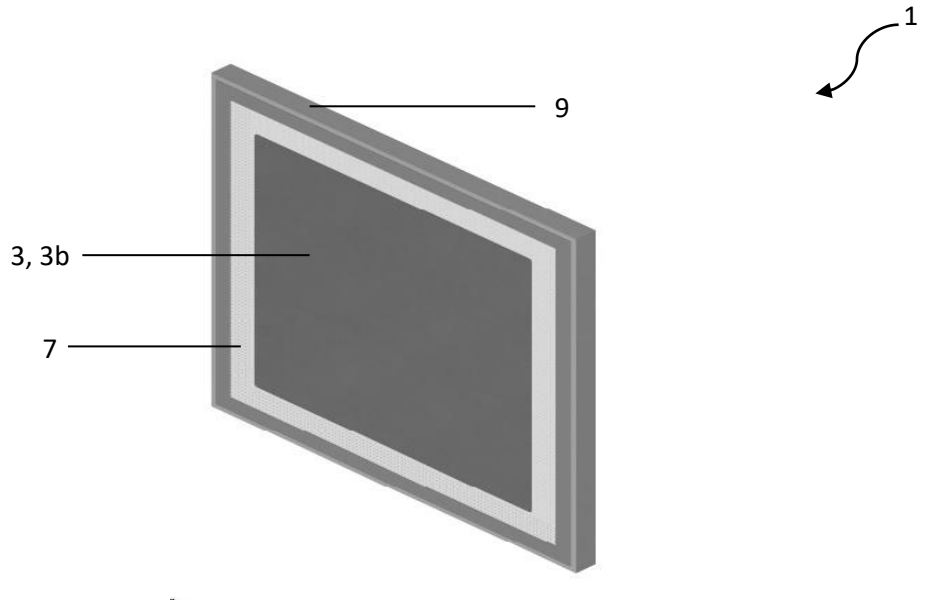

FIG. 1-A

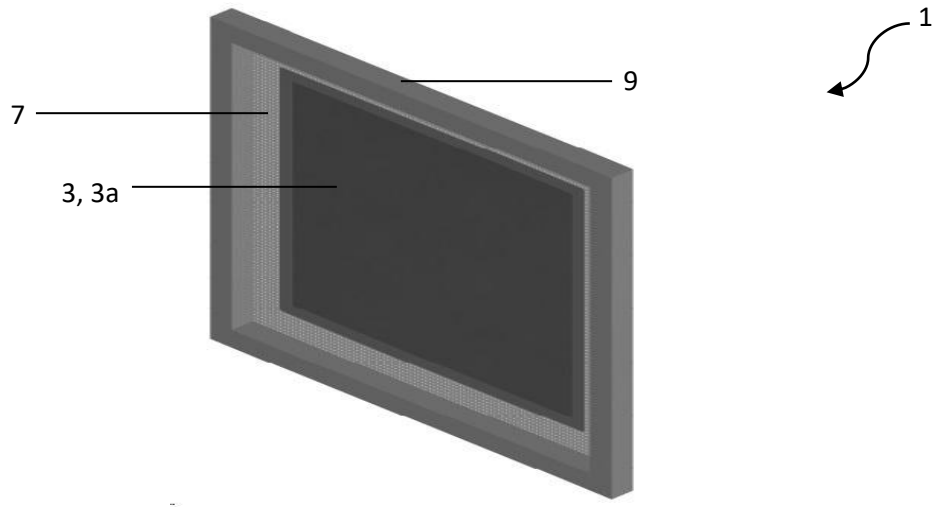

FIG. 1-B

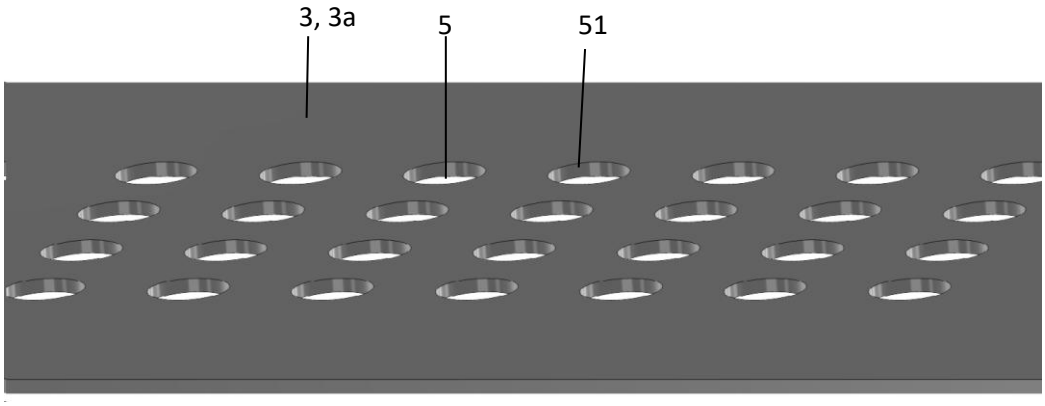

FIG. 1-C

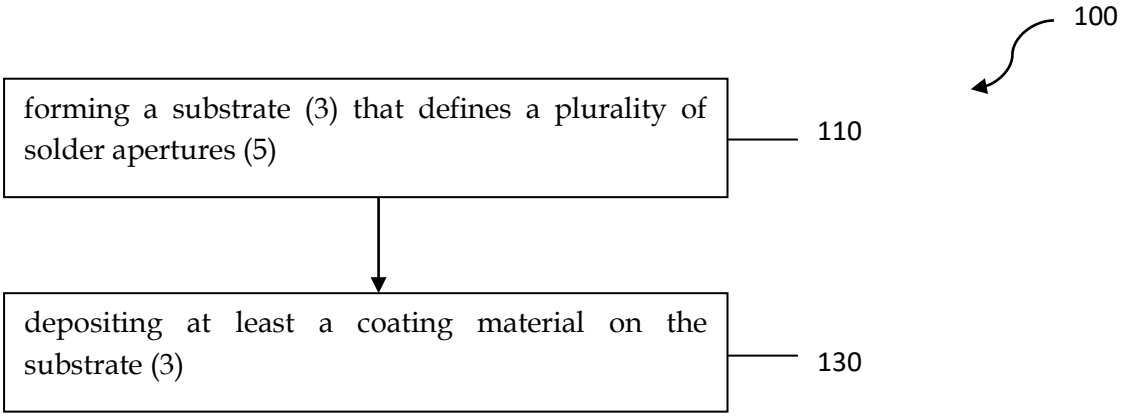

FIG. 2-A

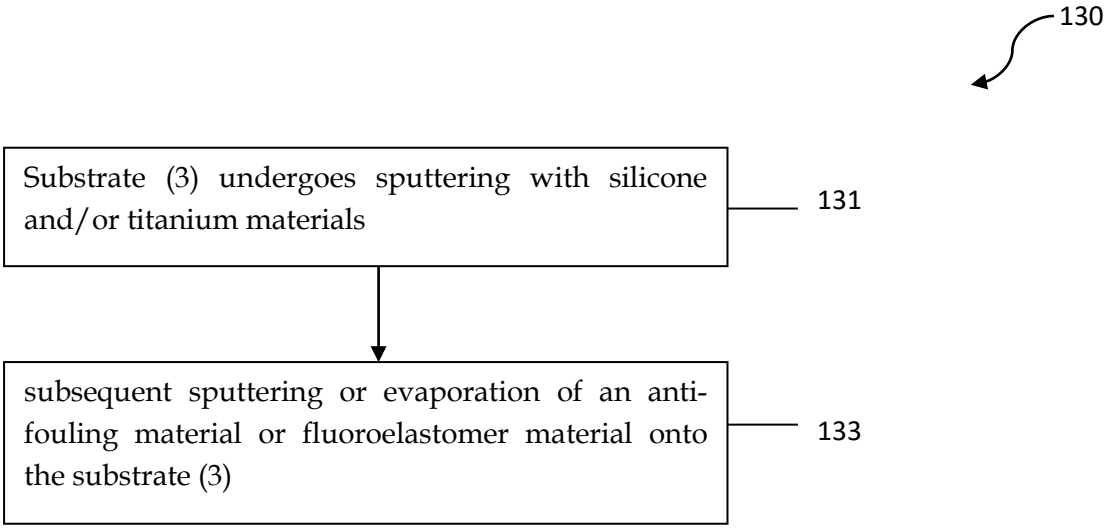

FIG. 2-B

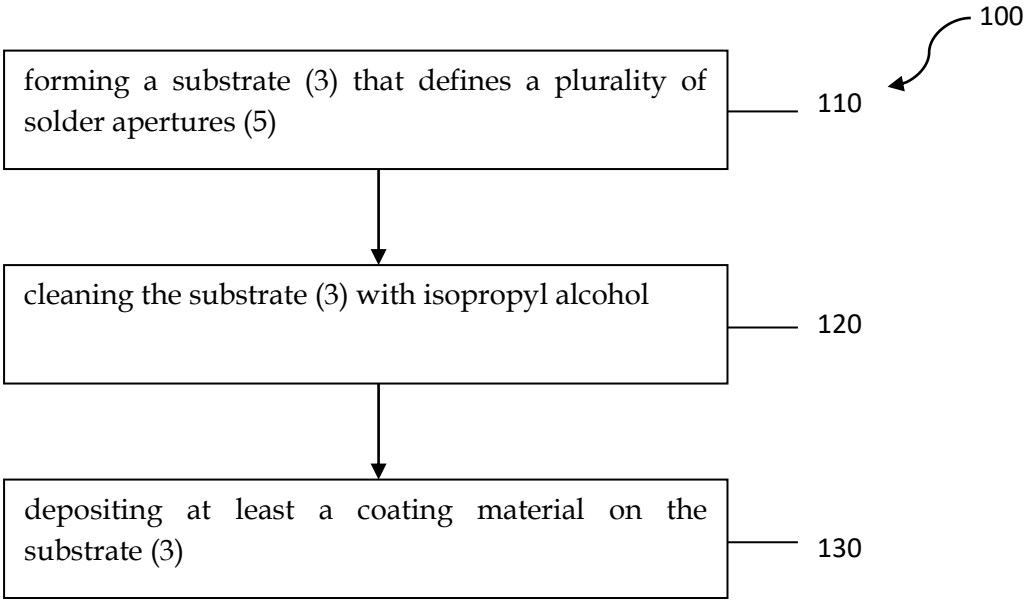

FIG. 3

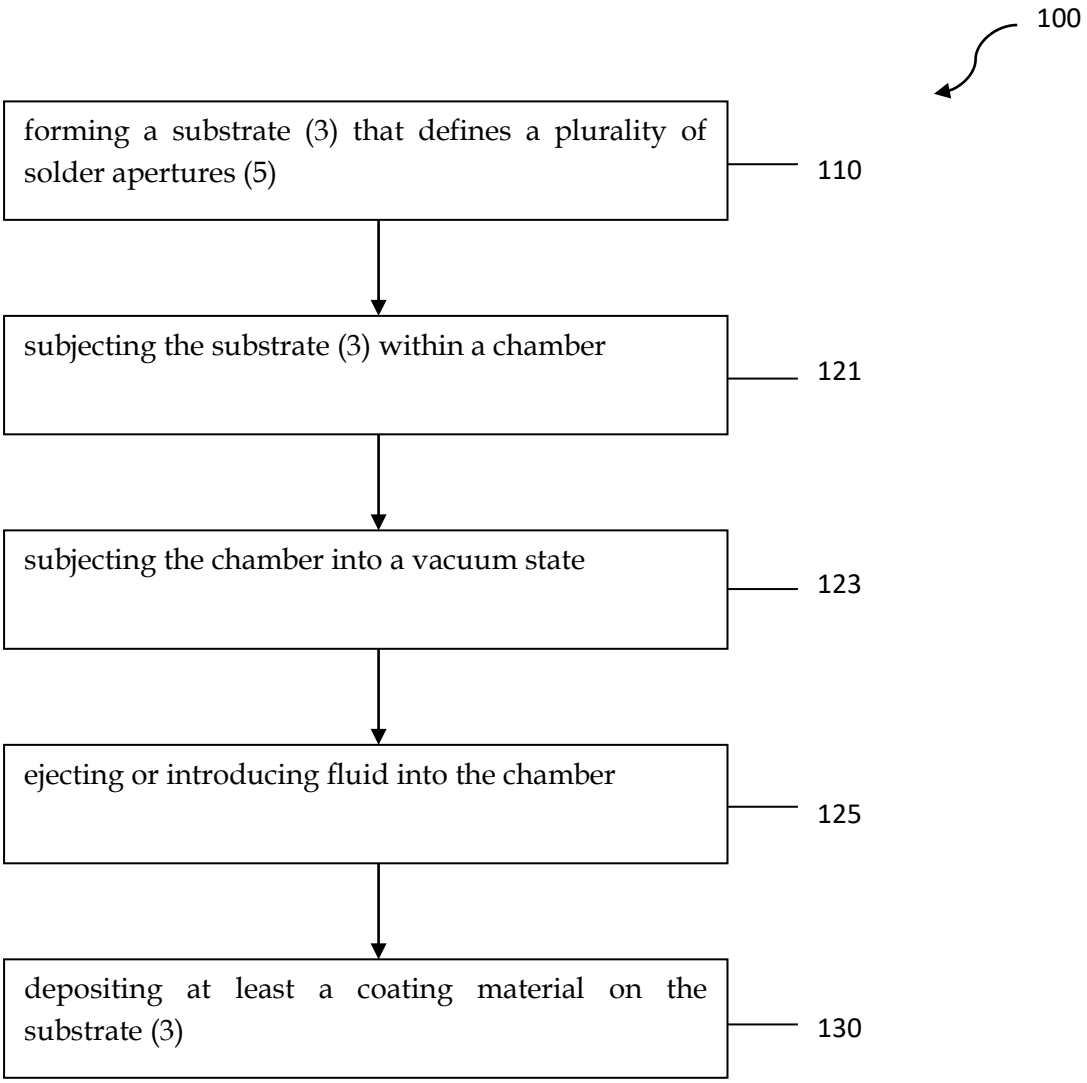
100
forming a substrate (3) that defines a plurality of solder apertures (5)
110
subjecting the substrate (3) within a chamber
121
subjecting the chamber into a vacuum state
123
ejecting or introducing fluid into the chamber
125
depositing at least a coating material on the substrate (3)
130

FIG. 4-A

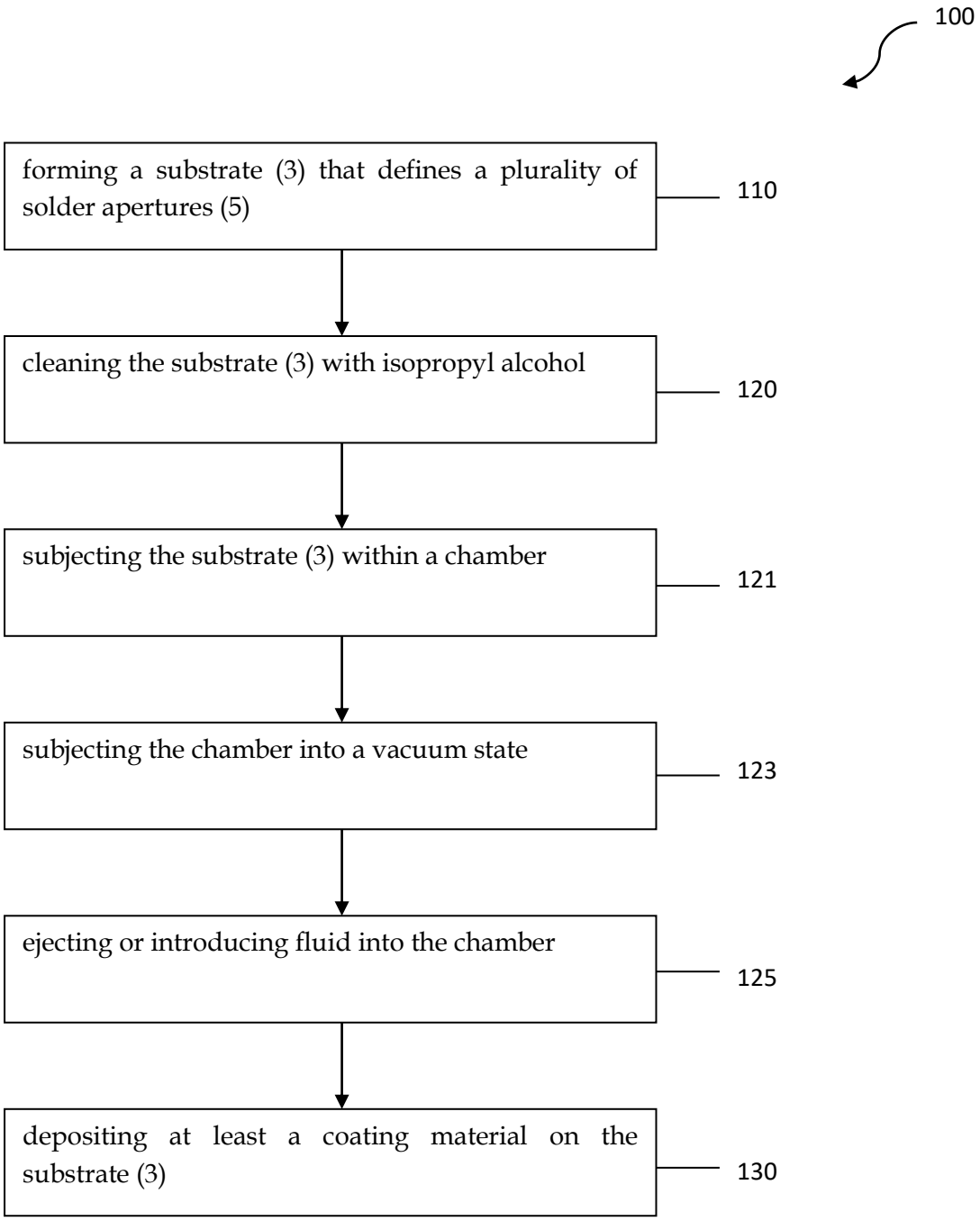
100
forming a substrate (3) that defines a plurality of solder apertures (5)
110
cleaning the substrate (3) with isopropyl alcohol
120
subjecting the substrate (3) within a chamber
121
subjecting the chamber into a vacuum state
123
ejecting or introducing fluid into the chamber
125
depositing at least a coating material on the substrate (3)
130

FIG. 4-B

Left contact angle: 115.19 degree
Right contact angle: 115.19 degree
Average: 115.19 degree

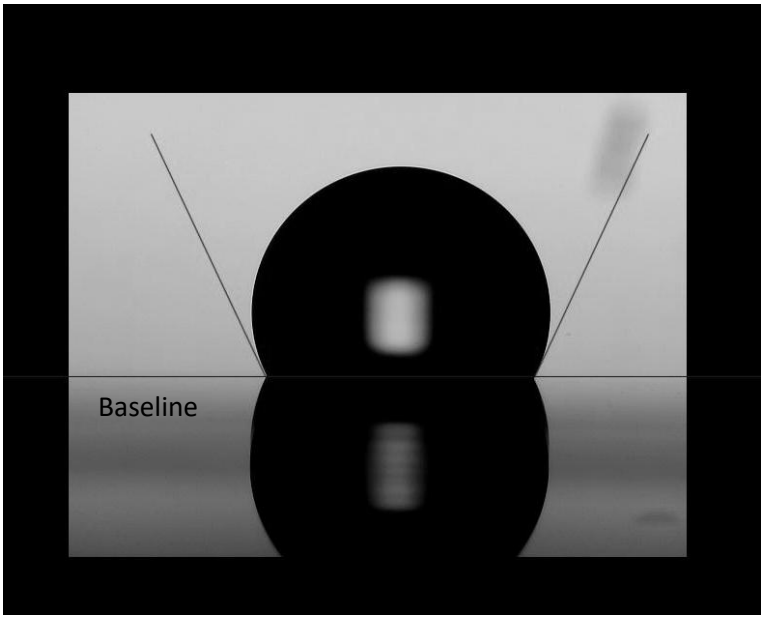

FIG. 5

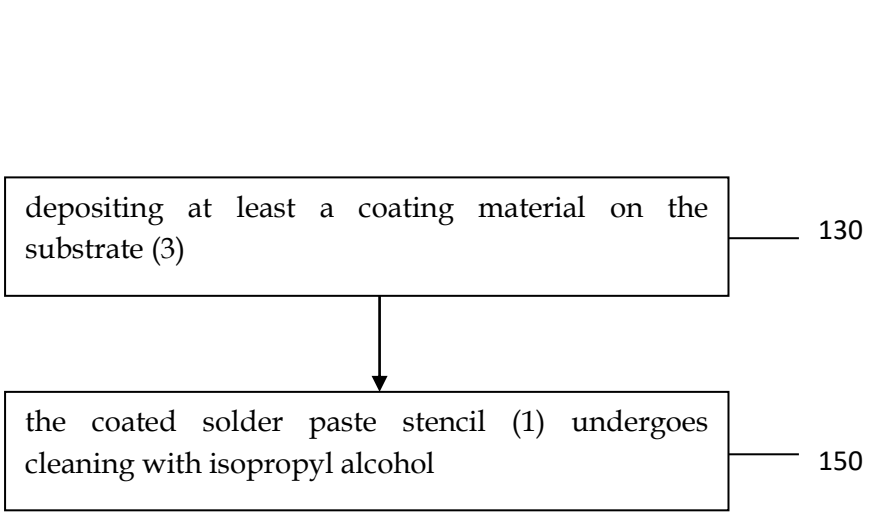

FIG. 6