Rev/No	Revision note	Date	Signature	Checked

Fig 1

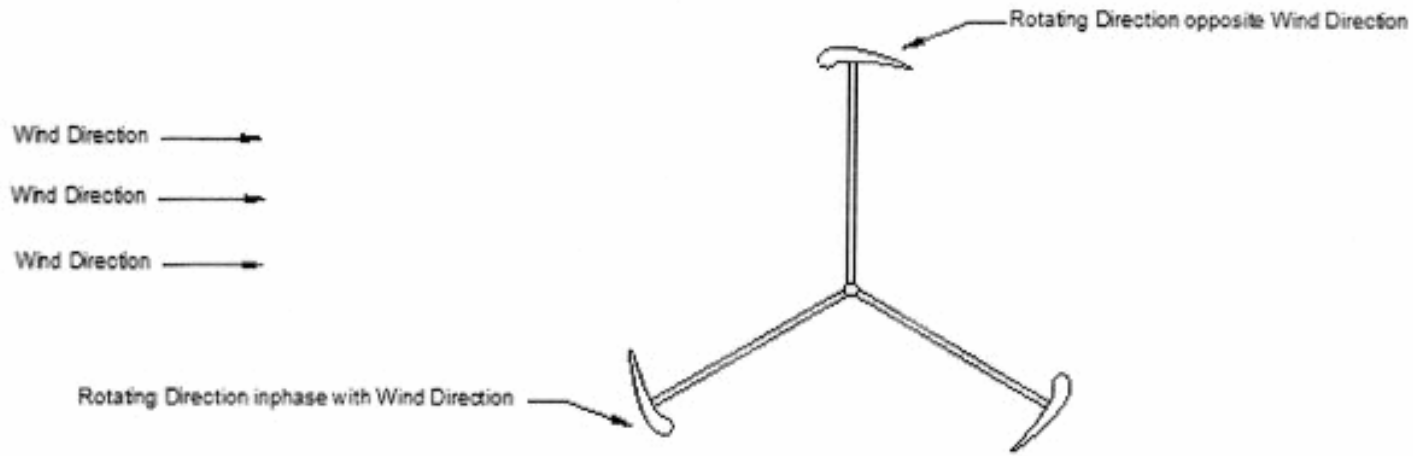

Itemref	Quantity	Title/Name, designation, material, dimension etc			Article No./Reference
Drawn by Mle		Checked by	Approved by - date	File name	Date 4-June-2010
					Scale N.A
Typical Top View of VAWT					
					Edition 1.0
					Sheet 1

RevNo	Revision note	Date	Signature	Checked

Fig 2

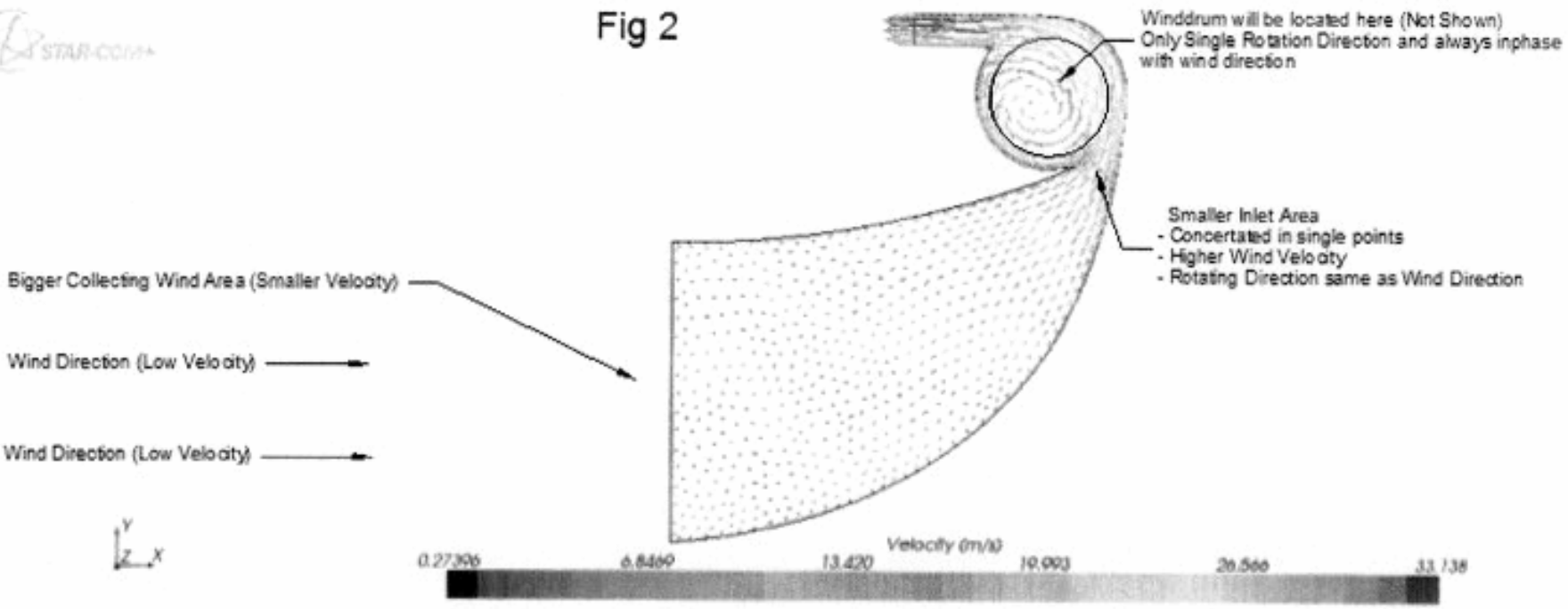

Itemref	Quantity	Title/Name, designation, material, dimension etc			Article No./Reference	
Drawn by Mie		Checked by	Approved by - date	File name	Date 4-June-2010	Scale N.A
Working Principle (Area Vs Velocity)					Edition 1.0	Sheet 2

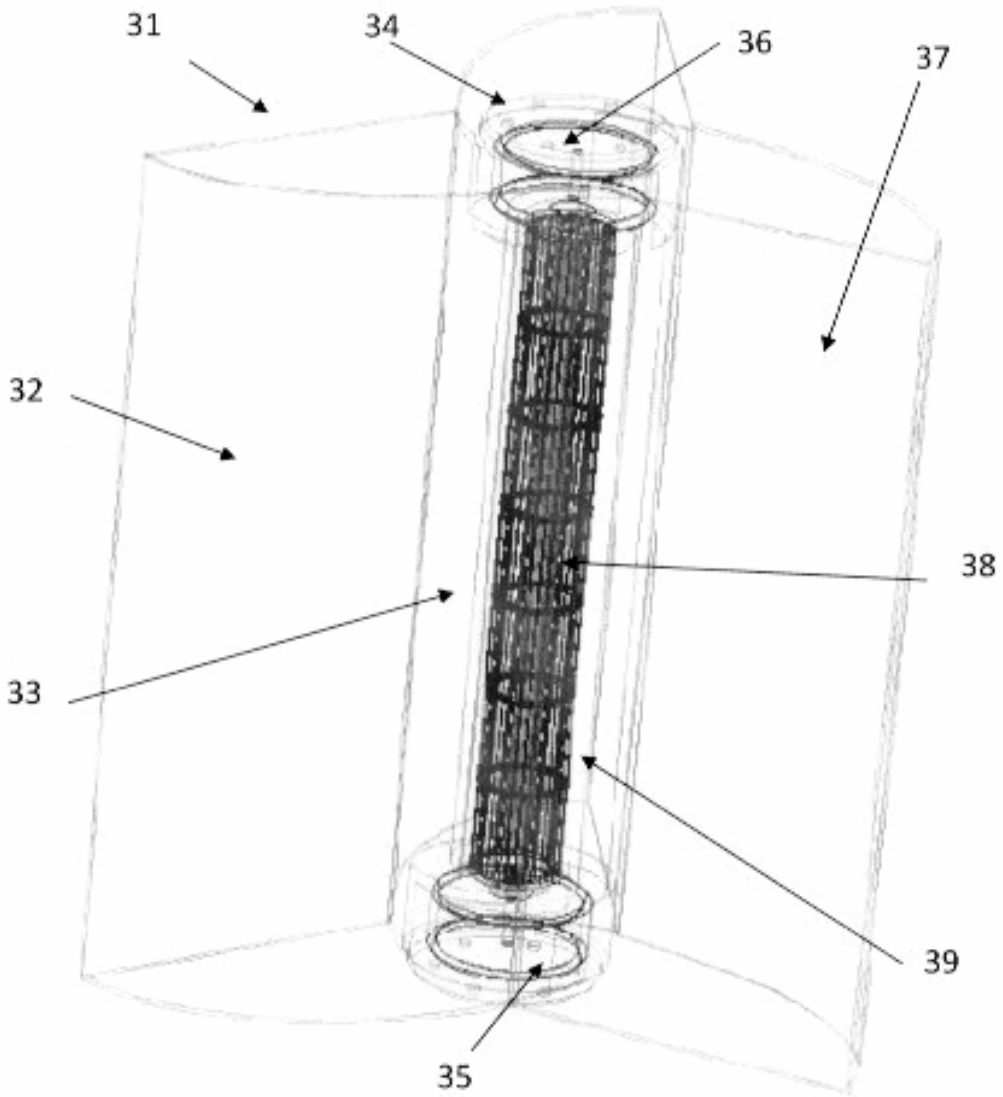

Fig 3 (Without Mounting)

Fig 4 - Front

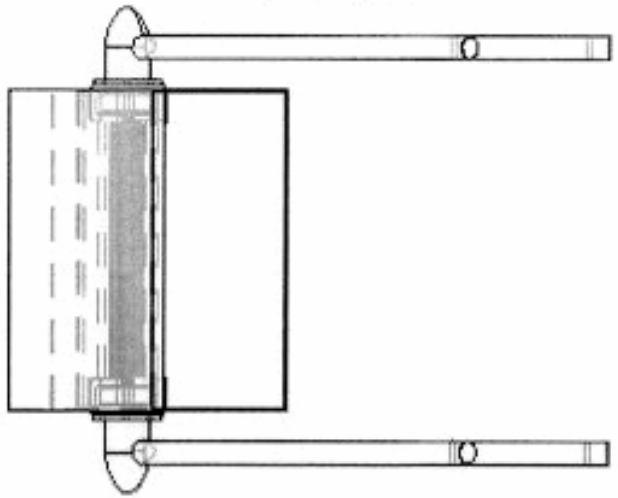

Fig 5 - End

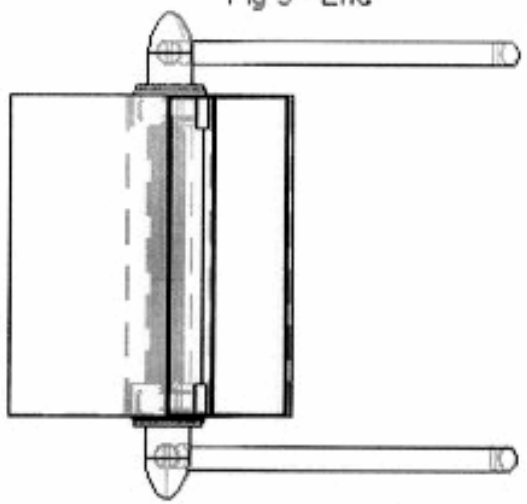

Fig 6 - Top

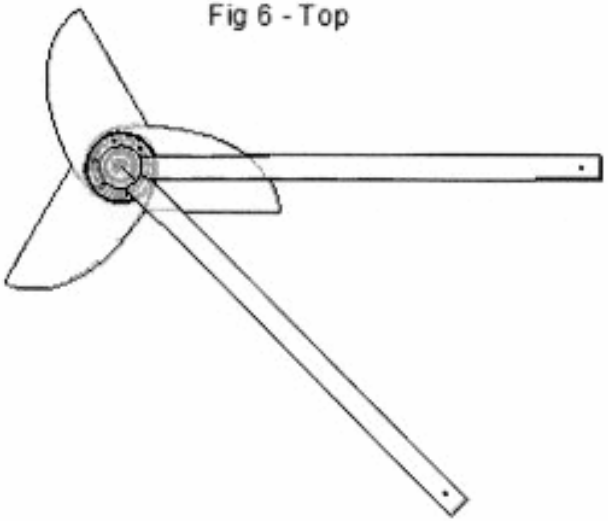

Iso view
(With Mounting Structure)

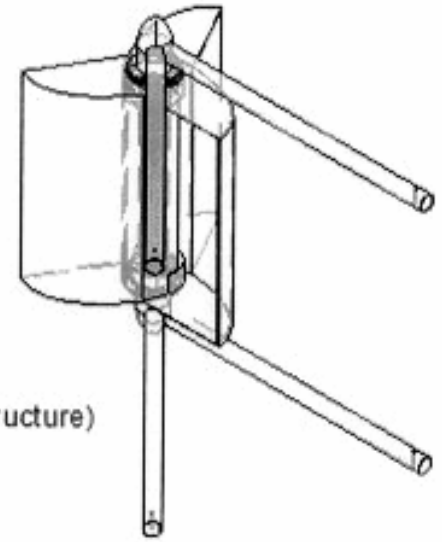

Item nº	Quantity	Title/Name, designation, material, dimension etc.			Article No./Reference
Drawn by Me		Checked by	Approved by - date	File name	Date 06-Jun-2010	Scale 1:10

Compressed Wind Turbine

Edition | Sheet

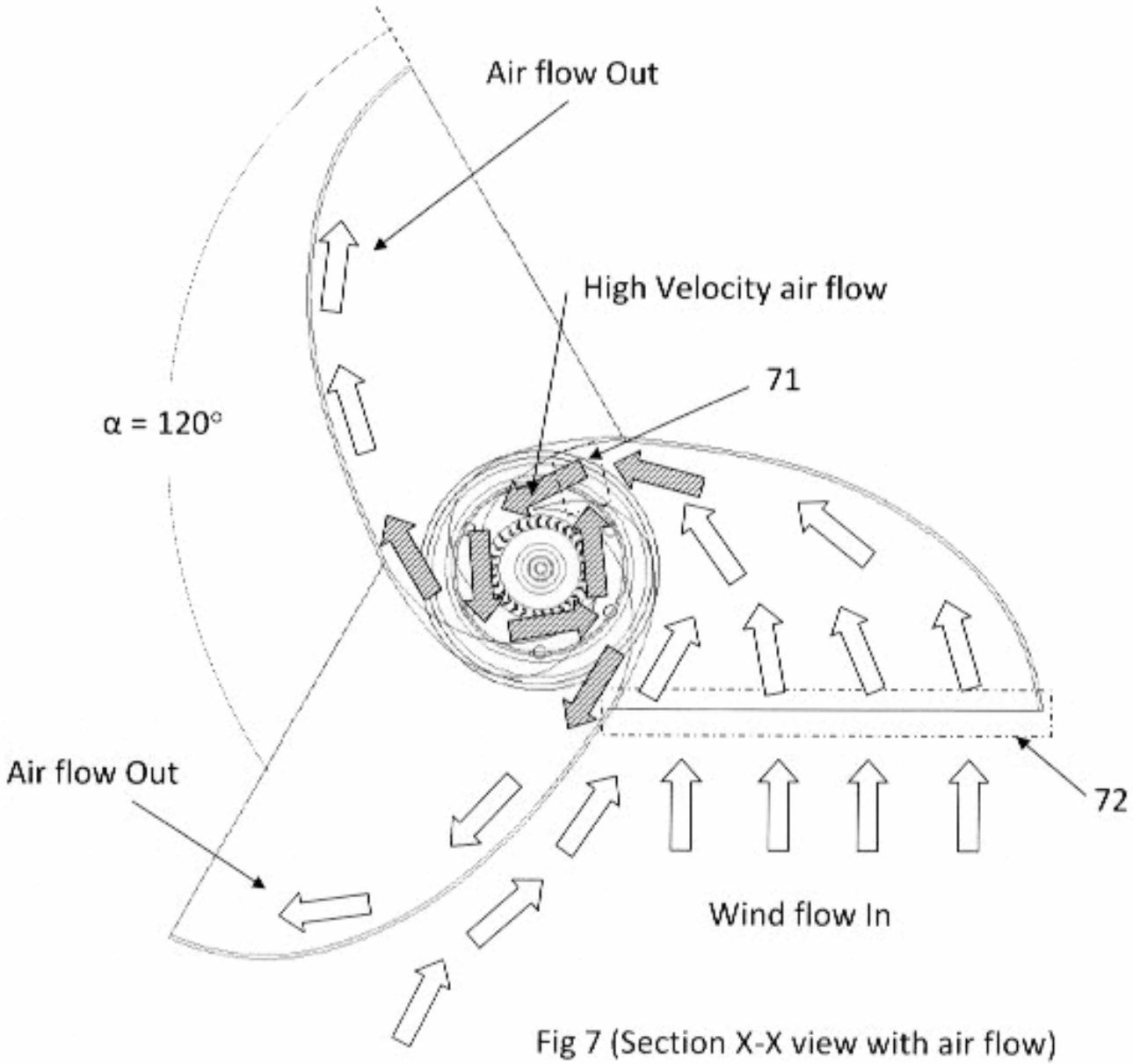

Fig 7 (Section X-X view with air flow)

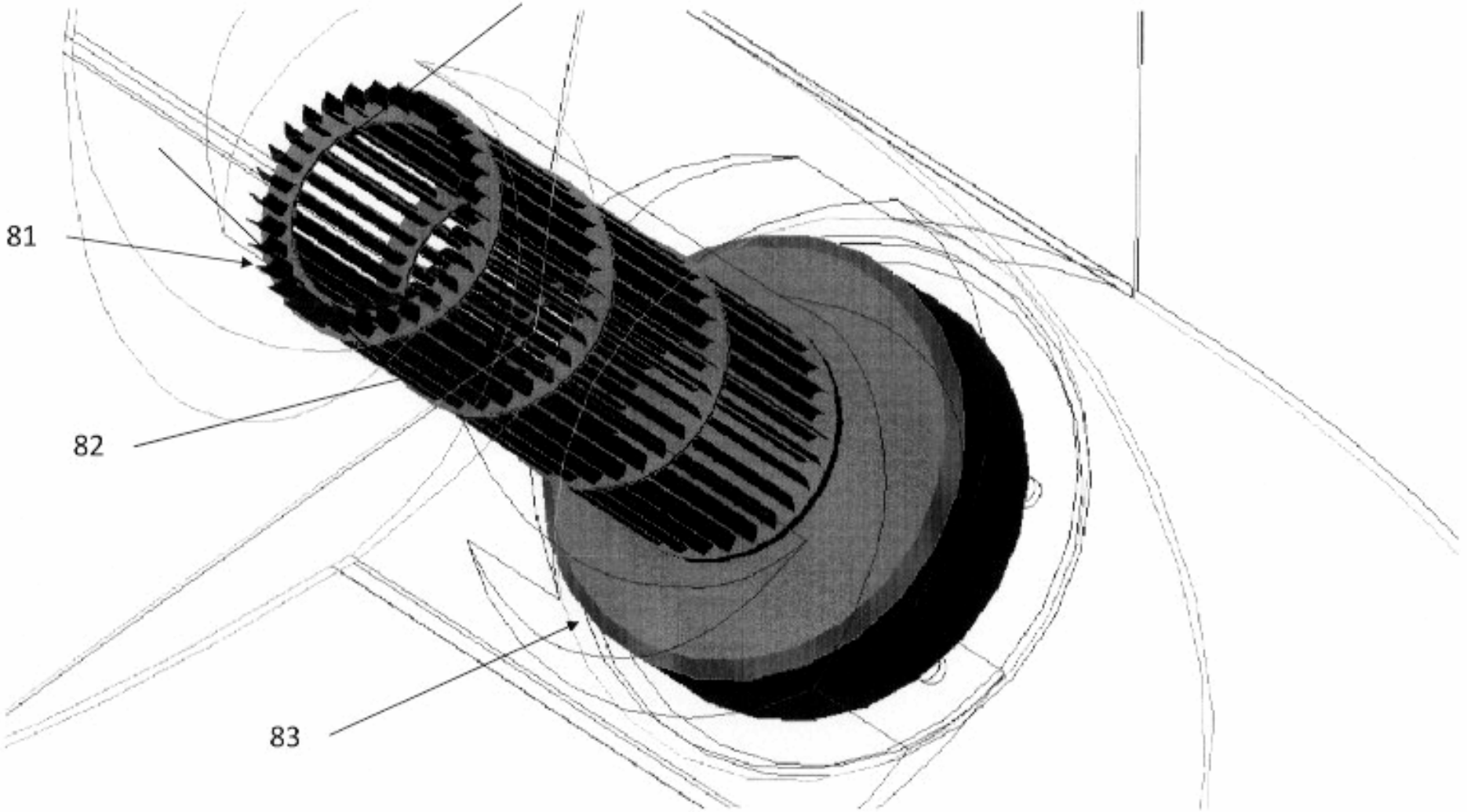

Fig 8 (enlarged Section X-X Wind drum and Generator)

Rev.No	Revision note	Date	Signature	Checked

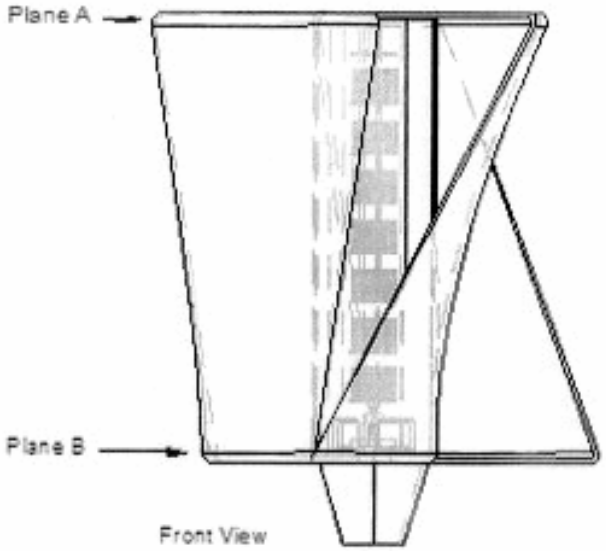

Fig 9

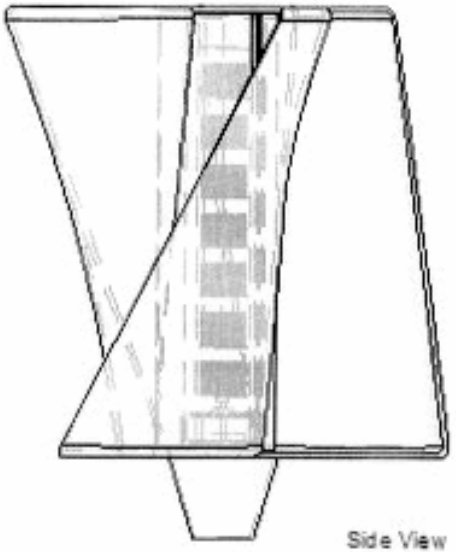

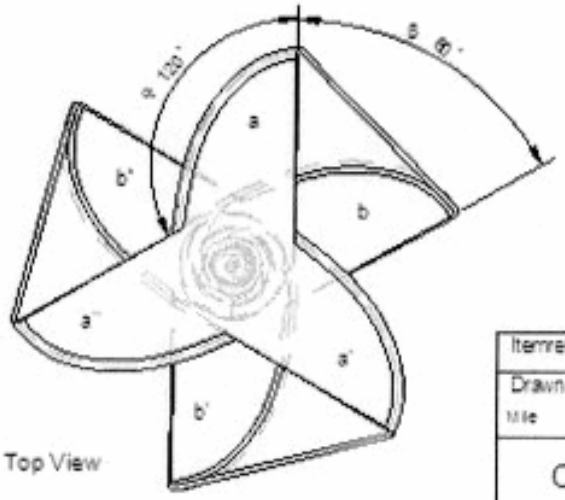

Item/ref	Quantity	Title/Name, designation, material, dimension etc			Article No./Reference	
Drawn by: Mie		Checked by	Approved by - date	File name	Date: 04-June-2010	Scale: 1:12
Compressed Wind Turbine (Rotated Design)					Edition: 1.0	Sheet: 6

Fig 10

