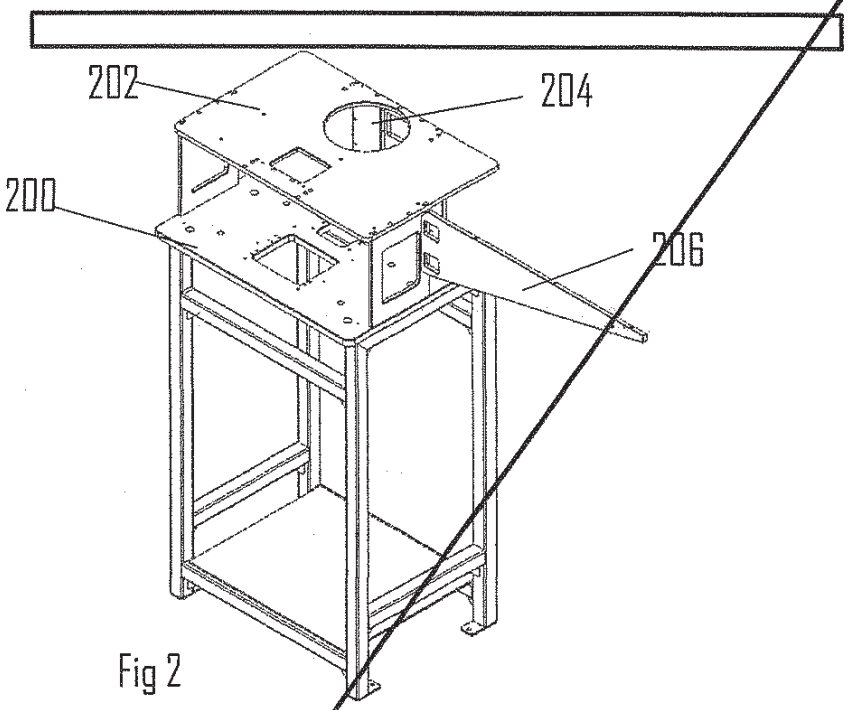

Fig 2

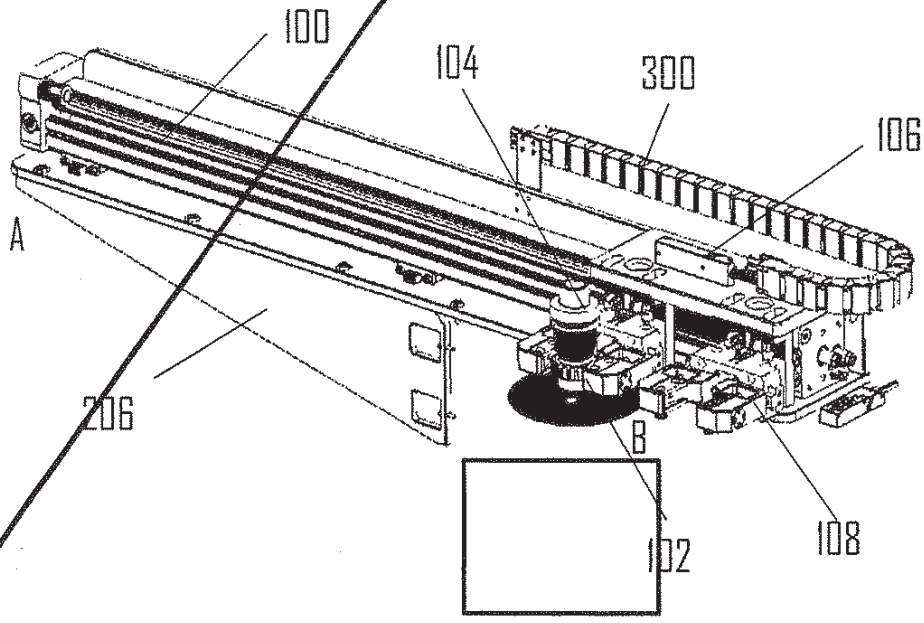

Fig 3

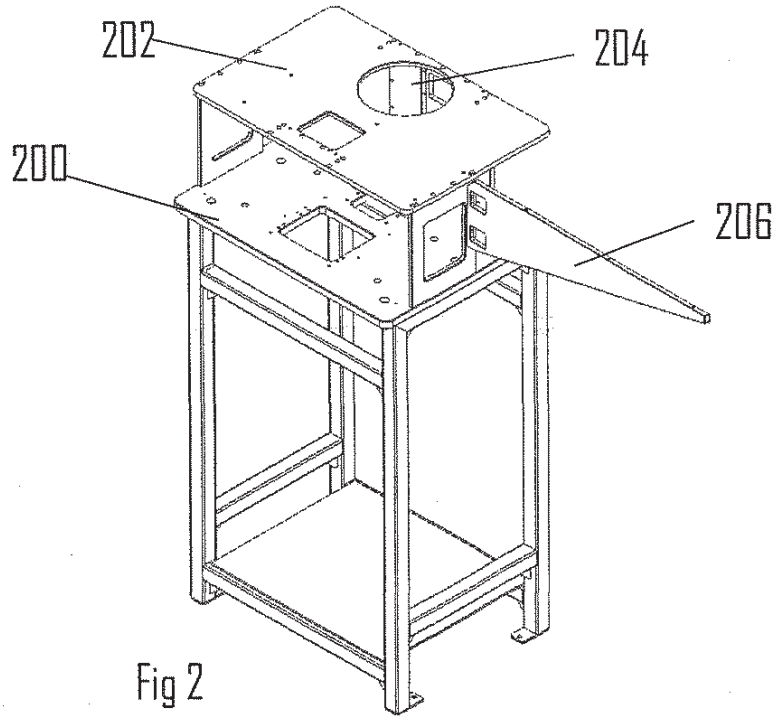

Fig 2

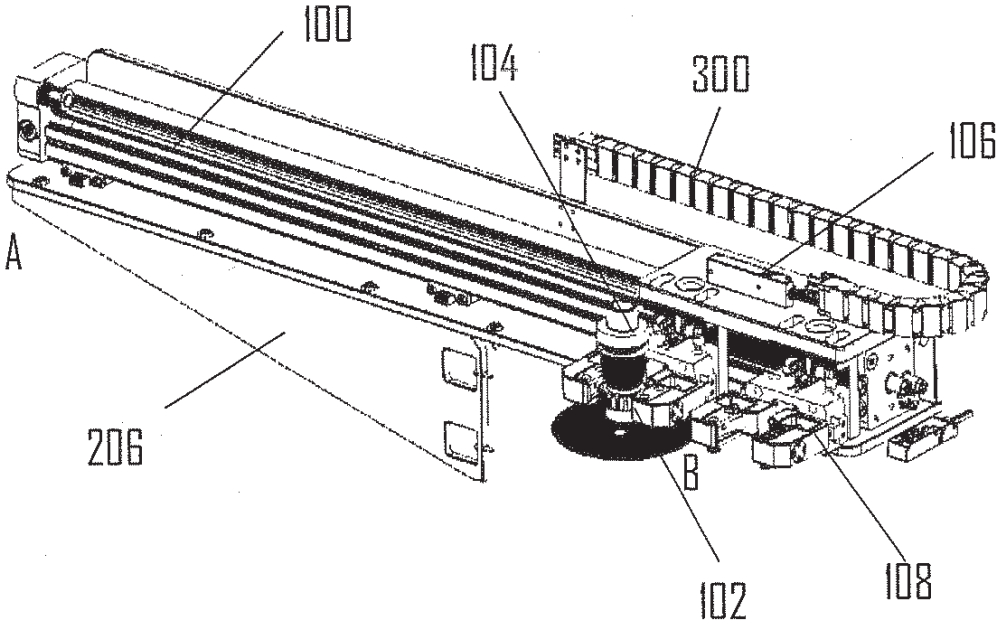

Fig 3