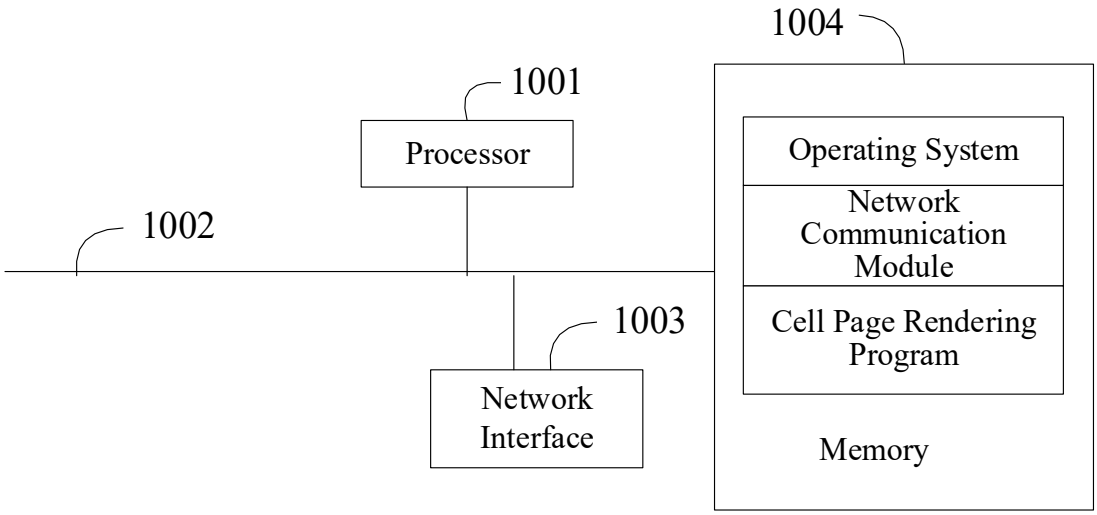
1004
1001
Processor
Operating System
Network Communication Module
Cell Page Rendering Program
1002
1003
Network Interface
Memory

FIG. 1

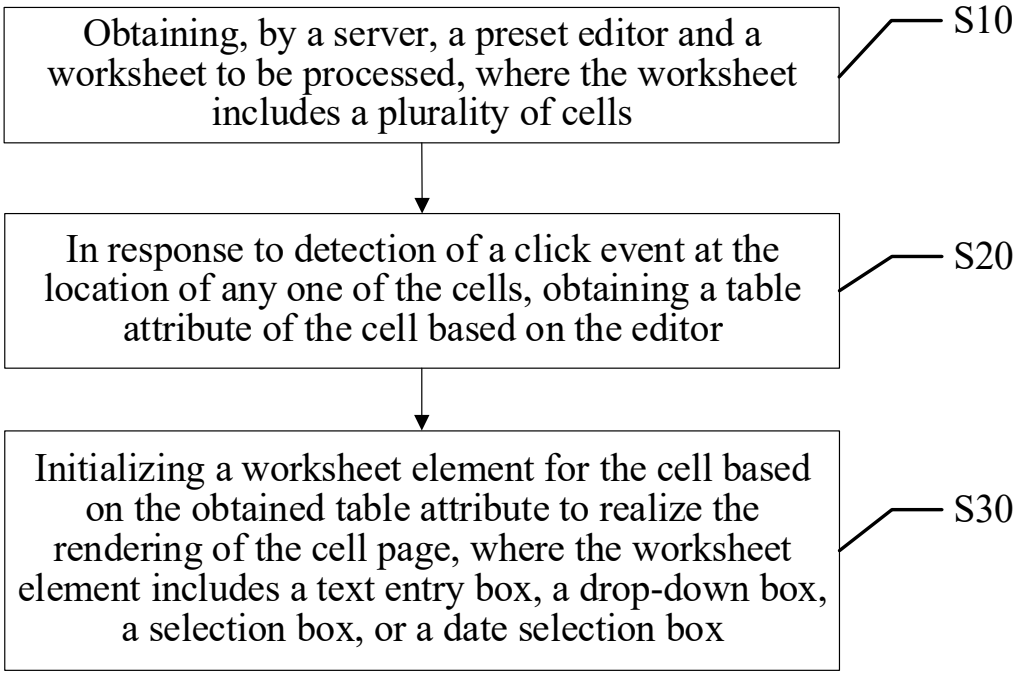
Obtaining, by a server, a preset editor and a worksheet to be processed, where the worksheet includes a plurality of cells
S10
In response to detection of a click event at the location of any one of the cells, obtaining a table attribute of the cell based on the editor
S20
Initializing a worksheet element for the cell based on the obtained table attribute to realize the rendering of the cell page, where the worksheet element includes a text entry box, a drop-down box, a selection box, or a date selection box
S30

FIG. 2

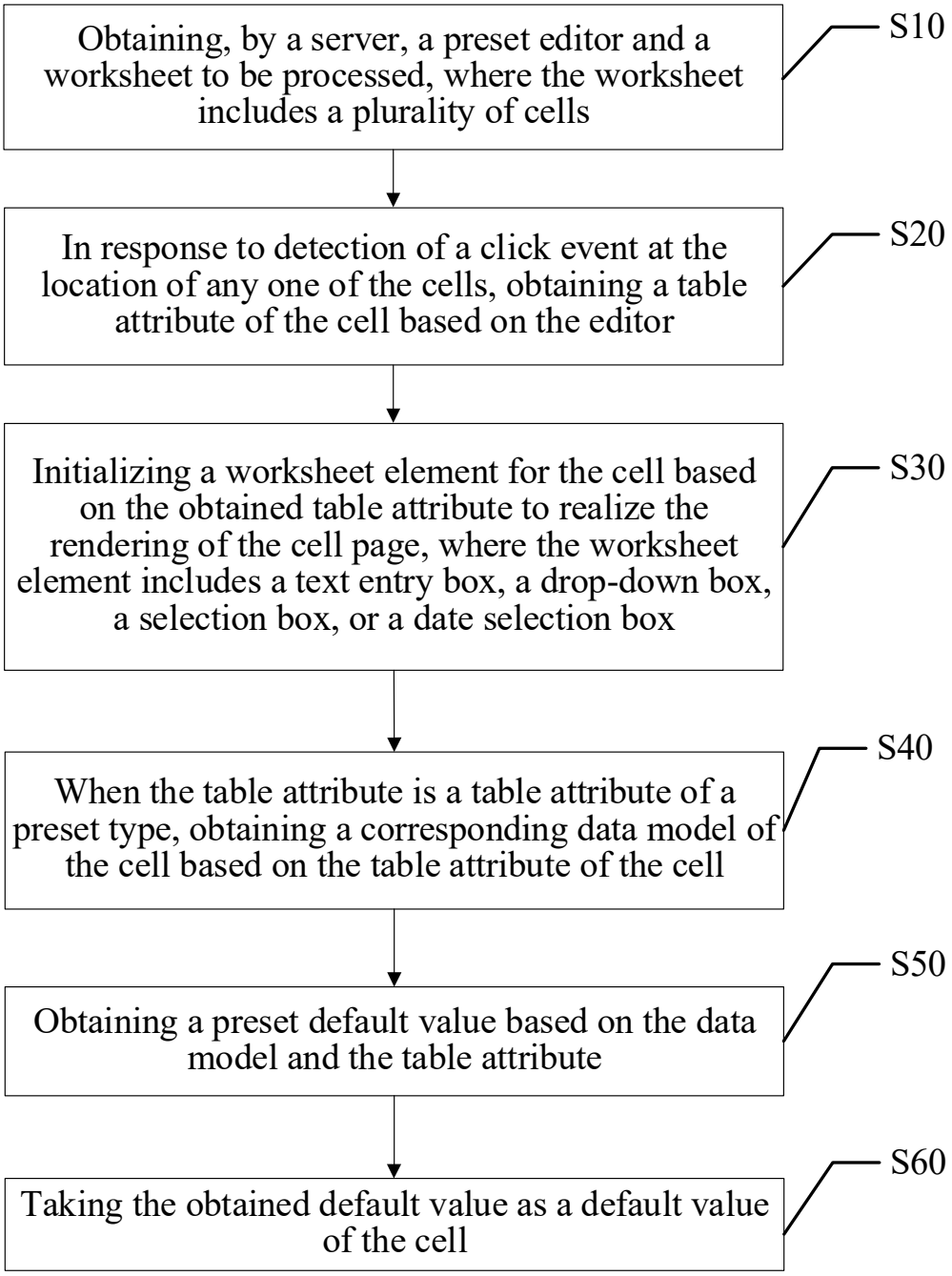
Obtaining, by a server, a preset editor and a worksheet to be processed, where the worksheet includes a plurality of cells
S10
In response to detection of a click event at the location of any one of the cells, obtaining a table attribute of the cell based on the editor
S20
Initializing a worksheet element for the cell based on the obtained table attribute to realize the rendering of the cell page, where the worksheet element includes a text entry box, a drop-down box, a selection box, or a date selection box
S30
When the table attribute is a table attribute of a preset type, obtaining a corresponding data model of the cell based on the table attribute of the cell
S40
Obtaining a preset default value based on the data model and the table attribute
S50
Taking the obtained default value as a default value of the cell
S60

FIG. 3

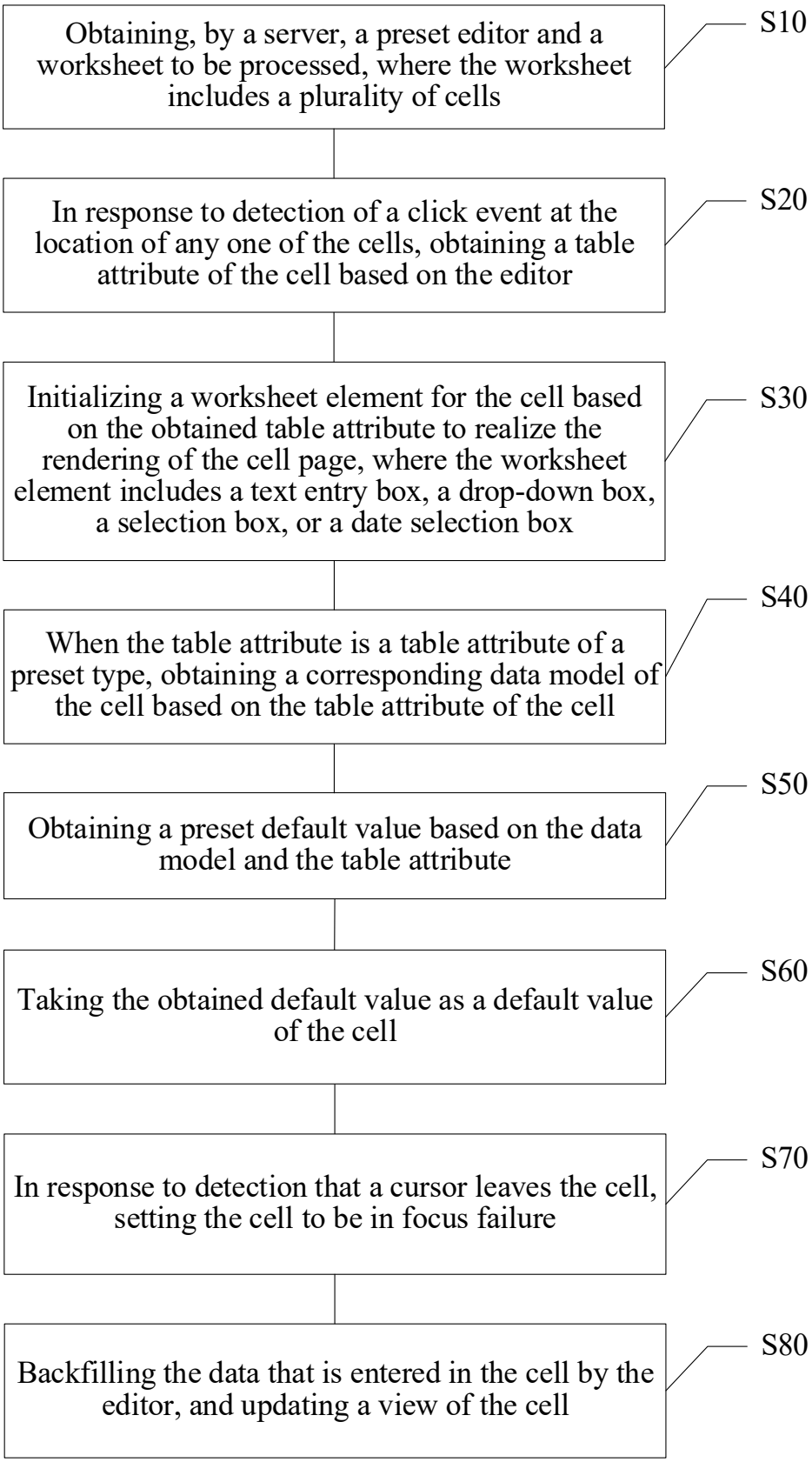
Obtaining, by a server, a preset editor and a worksheet to be processed, where the worksheet includes a plurality of cells
S10
In response to detection of a click event at the location of any one of the cells, obtaining a table attribute of the cell based on the editor
S20
Initializing a worksheet element for the cell based on the obtained table attribute to realize the rendering of the cell page, where the worksheet element includes a text entry box, a drop-down box, a selection box, or a date selection box
S30
When the table attribute is a table attribute of a preset type, obtaining a corresponding data model of the cell based on the table attribute of the cell
S40
Obtaining a preset default value based on the data model and the table attribute
S50
Taking the obtained default value as a default value of the cell
S60
In response to detection that a cursor leaves the cell, setting the cell to be in focus failure
S70
Backfilling the data that is entered in the cell by the editor, and updating a view of the cell
S80

FIG. 4