(12) INTERNATIONAL APPLICATION PUBLISHED UNDER THE PATENT COOPERATION TREATY (PCT)

(19) World Intellectual Property Organization
International Bureau

(43) International Publication Date
8 January 2009 (08.01.2009)

PCT

(10) International Publication Number
WO 2009/005883 A3

(51) International Patent Classification:
F16K 17/04 (2006.01)

(21) International Application Number:
PCT/US2008/061979

(22) International Filing Date: 30 April 2008 (30.04.2008)

(25) Filing Language: English

(26) Publication Language: English

(30) Priority Data:
60/915,170 1 May 2007 (01.05.2007) US

(71) Applicant *(for all designated States except US)*: **HYDRIL USA MANUFACTURING LLC** [US/US]; 3300 North Sam Houston Parkway East, Houston, TX 77032-3411 (US).

(72) Inventors; and

(75) Inventors/Applicants *(for US only)*: **RAWLS, Patrick** [US/US]; 20810 Arbor Bend Court, Humble, TX 77346 (US). **GUSTAFSON, Ryan** [US/US]; 9727 Goldenglade Drive, Houston, TX 77064 (US).

(74) Agent: **MCQUAY, Mardson, Q.**; General Electric Company, Global Patent Operation, P.O. Box 861, Suite 648, 2 Corporate Drive, Shelton, CT 06484 (US).

(81) Designated States *(unless otherwise indicated, for every kind of national protection available)*: AE, AG, AL, AM, AO, AT, AU, AZ, BA, BB, BG, BH, BR, BW, BY, BZ, CA, CH, CN, CO, CR, CU, CZ, DE, DK, DM, DO, DZ, EC, EE, EG, ES, FI, GB, GD, GE, GH, GM, GT, HN, HR, HU, ID, IL, IN, IS, JP, KE, KG, KM, KN, KP, KR, KZ, LA, LC, LK, LR, LS, LT, LU, LY, MA, MD, ME, MG, MK, MN, MW, MX, MY, MZ, NA, NG, NI, NO, NZ, OM, PG, PH, PL, PT, RO, RS, RU, SC, SD, SE, SG, SK, SL, SM, SV, SY, TJ, TM, TN, TR, TT, TZ, UA, UG, US, UZ, VC, VN, ZA, ZM, ZW.

(84) Designated States *(unless otherwise indicated, for every kind of regional protection available)*: ARIPO (BW, GH, GM, KE, LS, MW, MZ, NA, SD, SL, SZ, TZ, UG, ZM, ZW), Eurasian (AM, AZ, BY, KG, KZ, MD, RU, TJ, TM), European (AT, BE, BG, CH, CY, CZ, DE, DK, EE, ES, FI, FR, GB, GR, HR, HU, IE, IS, IT, LT, LU, LV, MC, MT, NL, NO, PL, PT, RO, SE, SI, SK, TR), OAPI (BF, BJ, CF, CG, CI, CM, GA, GN, GQ, GW, ML, MR, NE, SN, TD, TG).

Published:
— *with international search report*
— *before the expiration of the time limit for amending the claims and to be republished in the event of receipt of amendments*

[Continued on next page]

(54) **Title:** PRESSURE RELIEF VALVE AND METHOD FOR SUBSEA COMPONENTS

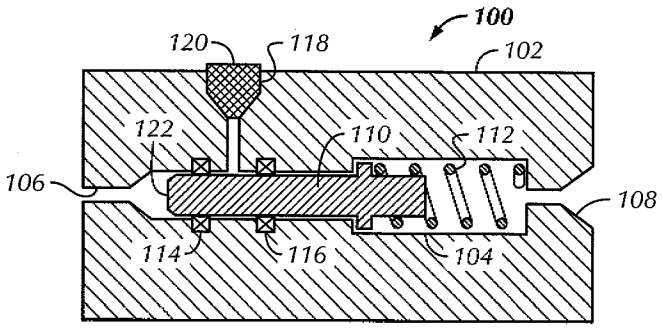

FIG. 1

(57) **Abstract:** A relief valve for a pressure vessel includes a housing having an inner bore extending between an inlet and an outlet, a piston located within the inner bore, a spring disposed about the piston and configured to bias the piston into a closed position, a test port in communication with the inner bore, a removable test plug sealingly disposed within the test port, and a first seal and a second seal disposed within the inner bore on either side of the test port, the first and second seals configured to engage the piston and hydraulically isolate the inlet from the outlet when the piston is in the closed position.

WO 2009/005883 A3

(88) Date of publication of the international search report:
9 July 2009