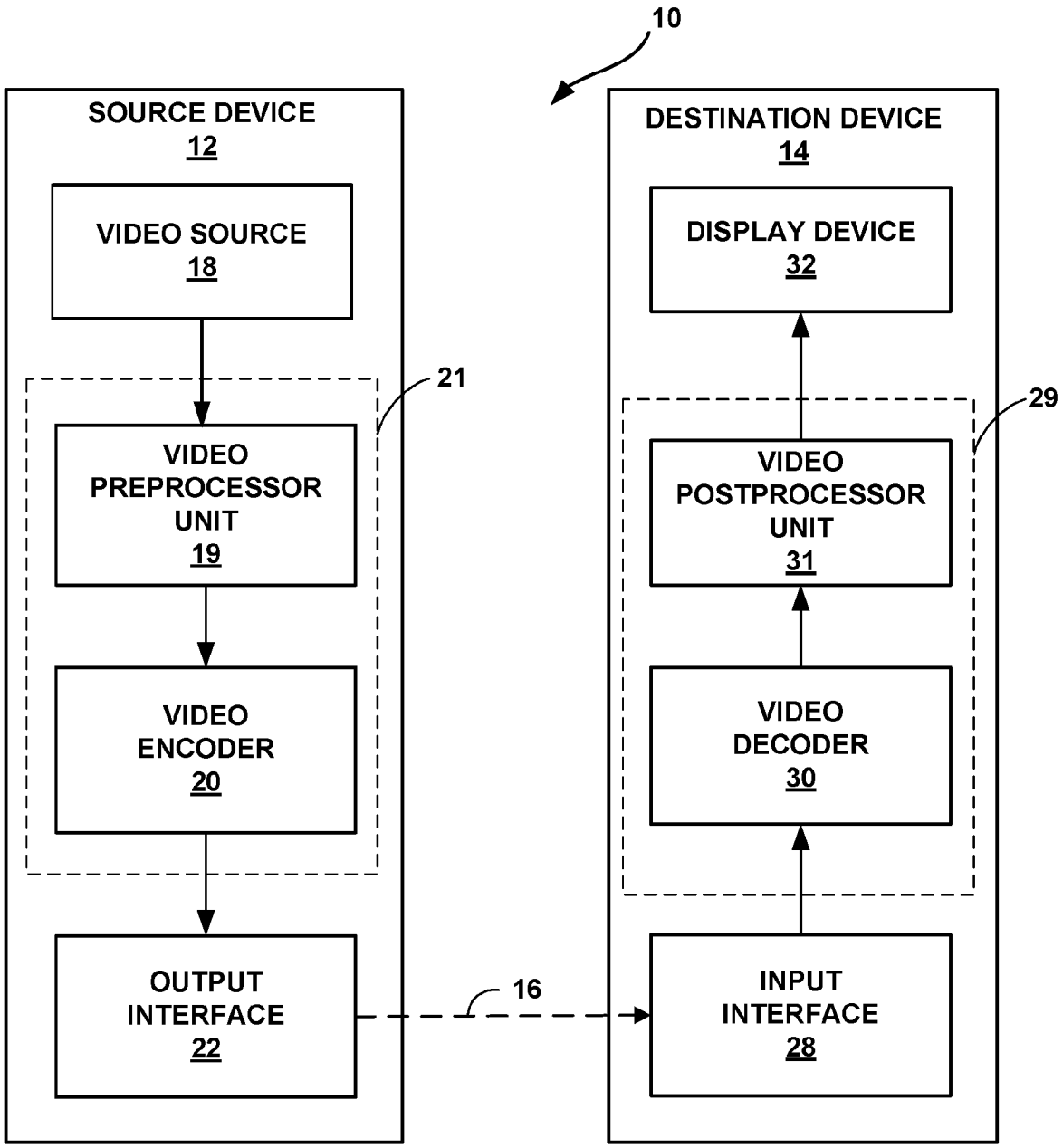
10
SOURCE DEVICE
12
VIDEO SOURCE
18
21
VIDEO
PREPROCESSOR
UNIT
19
VIDEO
ENCODER
20
OUTPUT
INTERFACE
22
16
DESTINATION DEVICE
14
DISPLAY DEVICE
32
29
VIDEO
POSTPROCESSOR
UNIT
31
VIDEO
DECODER
30
INPUT
INTERFACE
28

FIG. 1

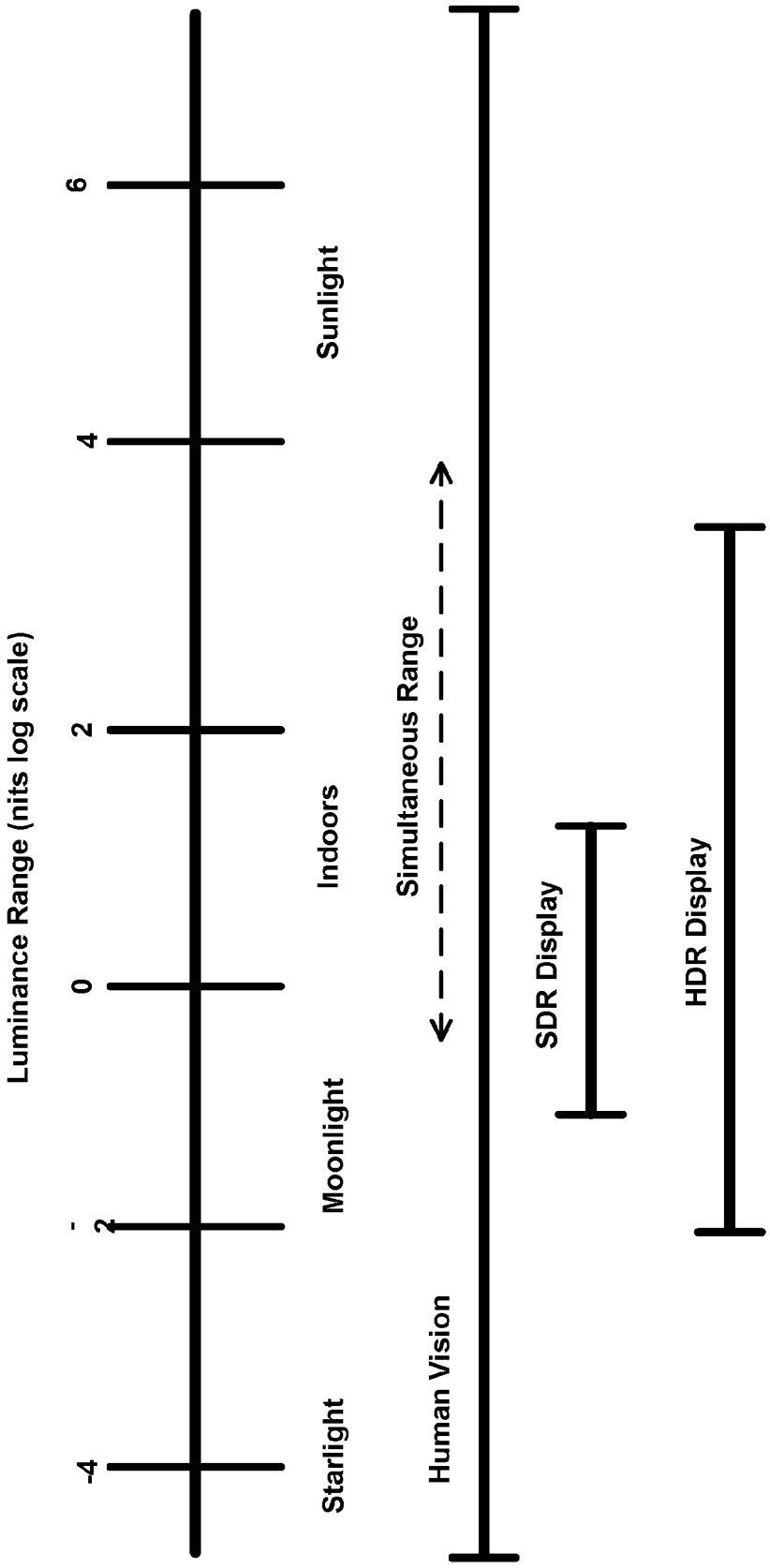
Luminance Range (nits log scale)
-4
-2
0
2
4
6
Starlight
Moonlight
Indoors
Sunlight
Human Vision
Simultaneous Range
SDR Display
HDR Display

FIG. 2

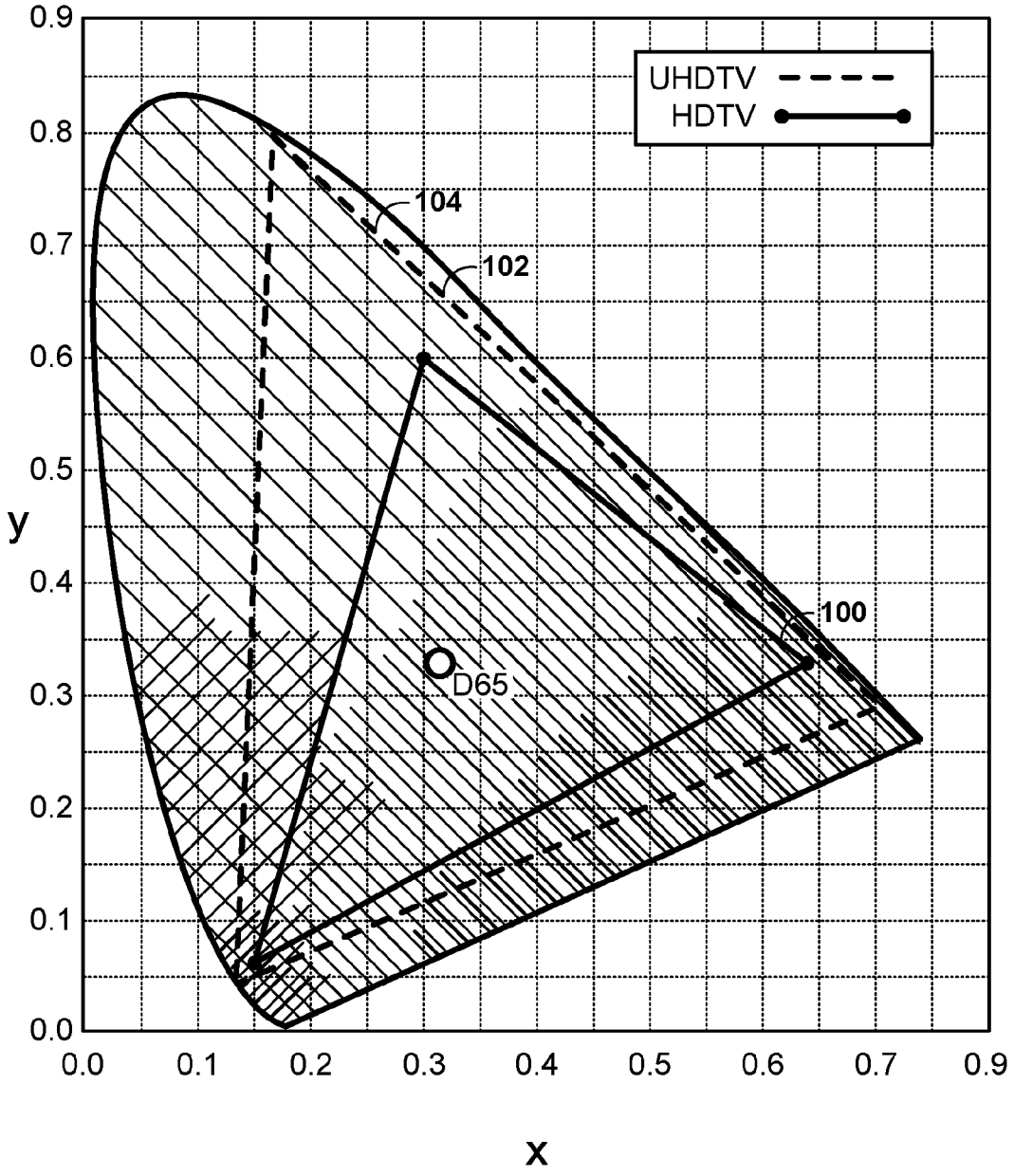

FIG. 3

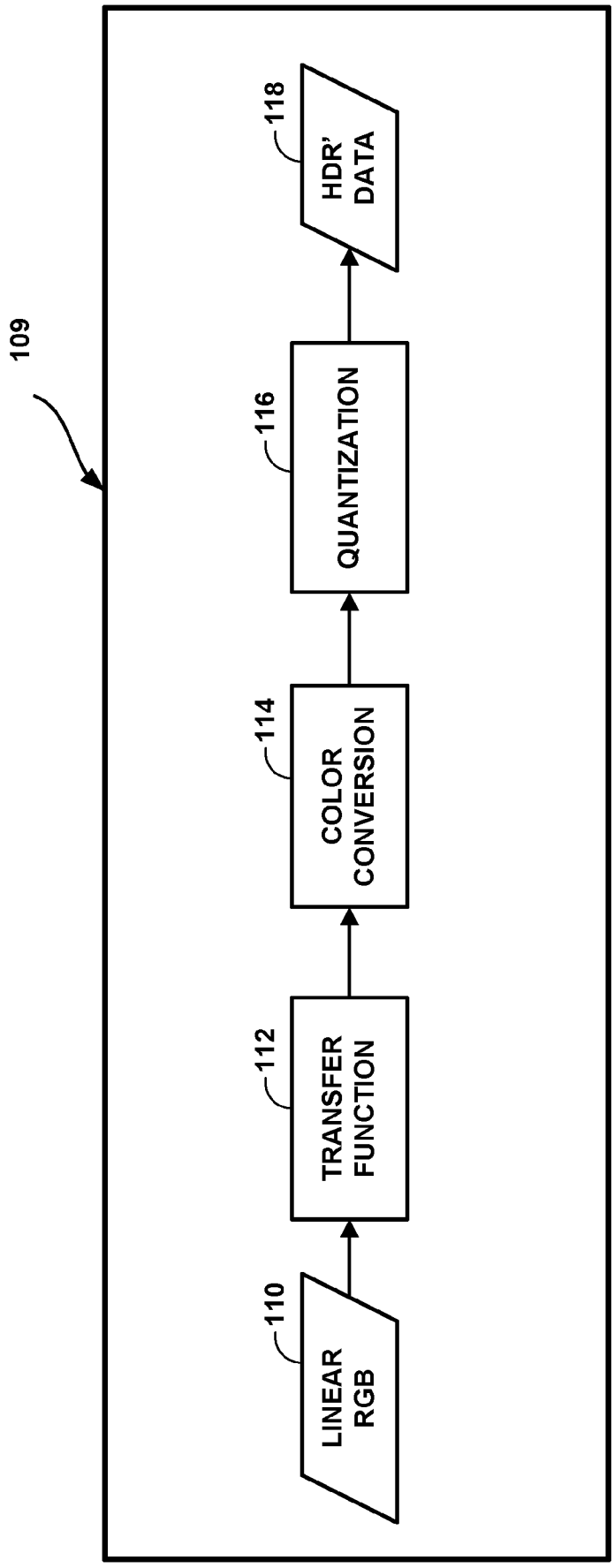
109
110
LINEAR RGB
112
TRANSFER FUNCTION
114
COLOR CONVERSION
116
QUANTIZATION
118
HDR' DATA

FIG. 4

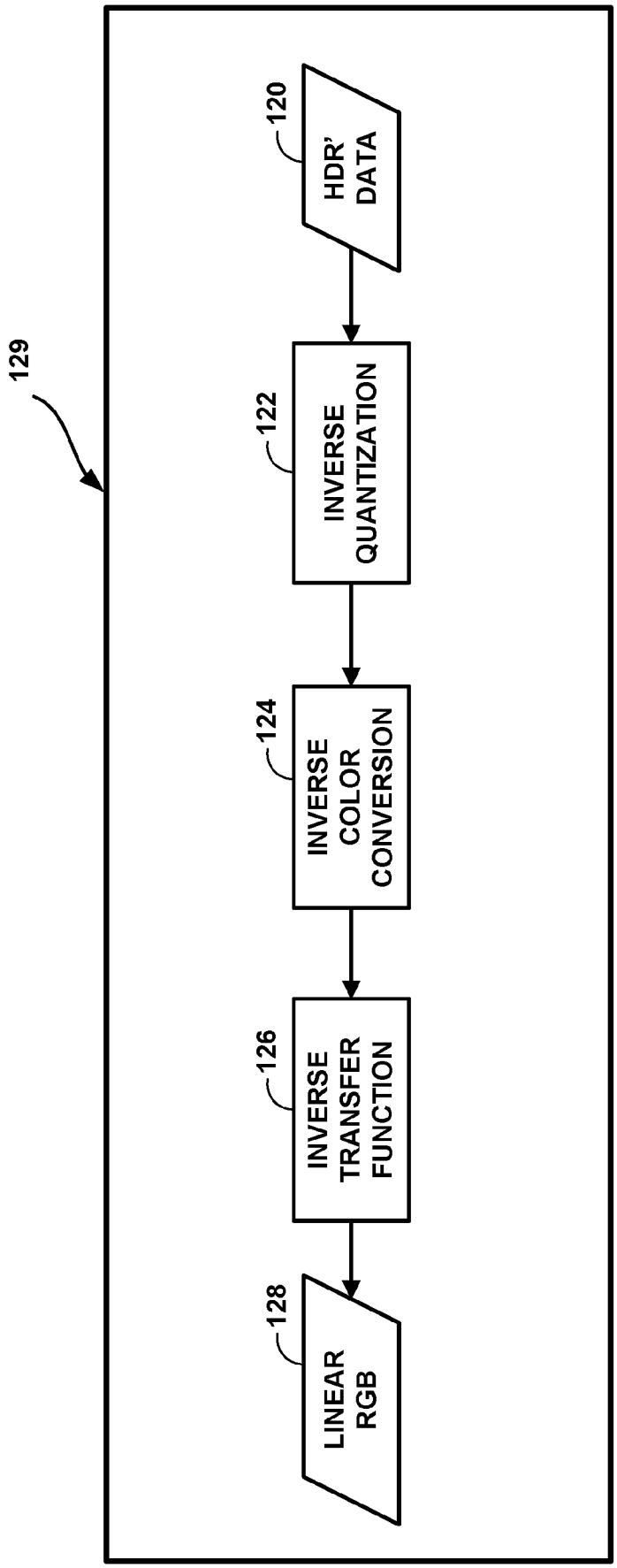
129
120
HDR' DATA
122
INVERSE QUANTIZATION
124
INVERSE COLOR CONVERSION
126
INVERSE TRANSFER FUNCTION
128
LINEAR RGB

FIG. 5

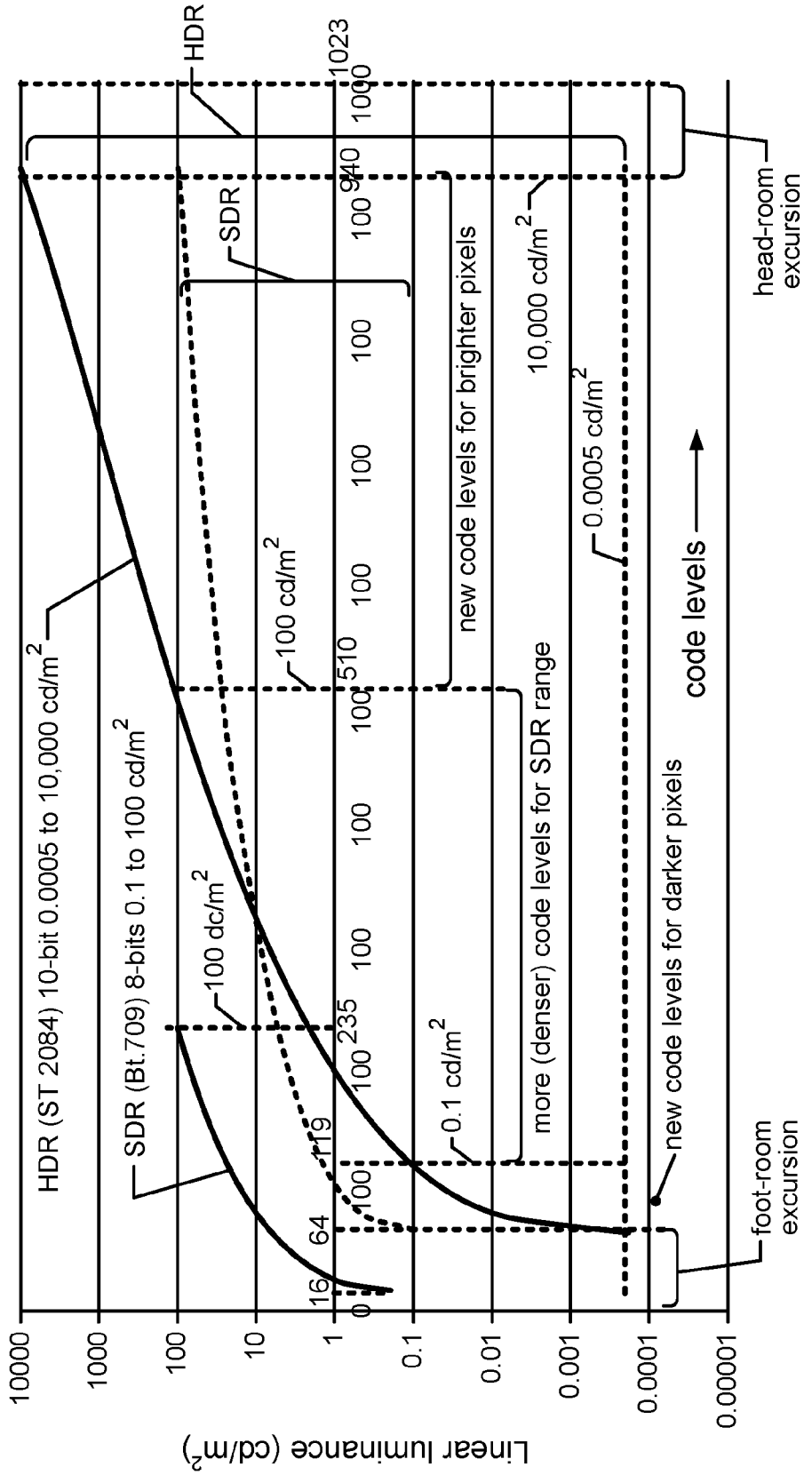

Example of EOTFs

FIG. 6

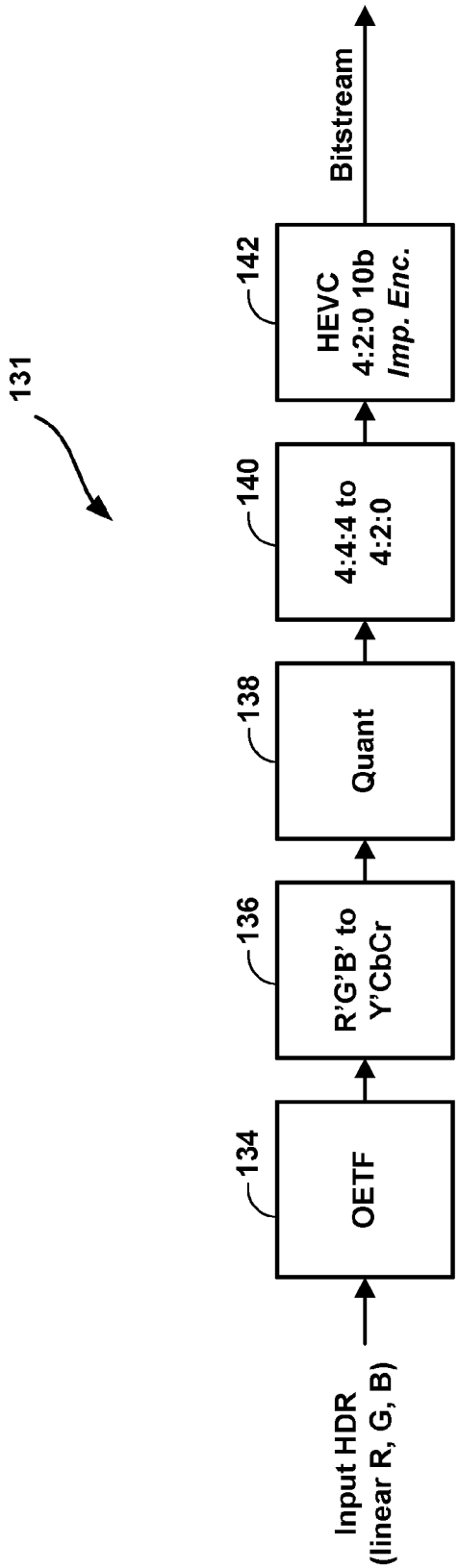
131
Input HDR
(linear R, G, B)
134
OETF
136
R'G'B' to
Y'CbCr
138
Quant
140
4:4:4 to
4:2:0
142
HEVC
4:2:0 10b
Imp. Enc.
Bitstream

FIG. 7

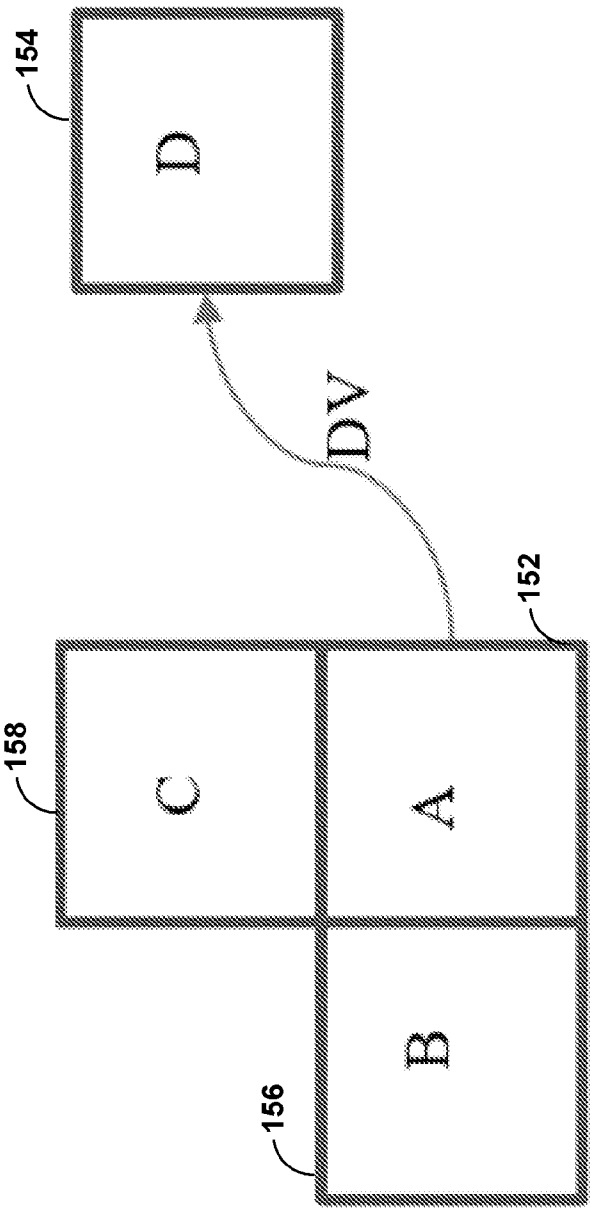

FIG. 8

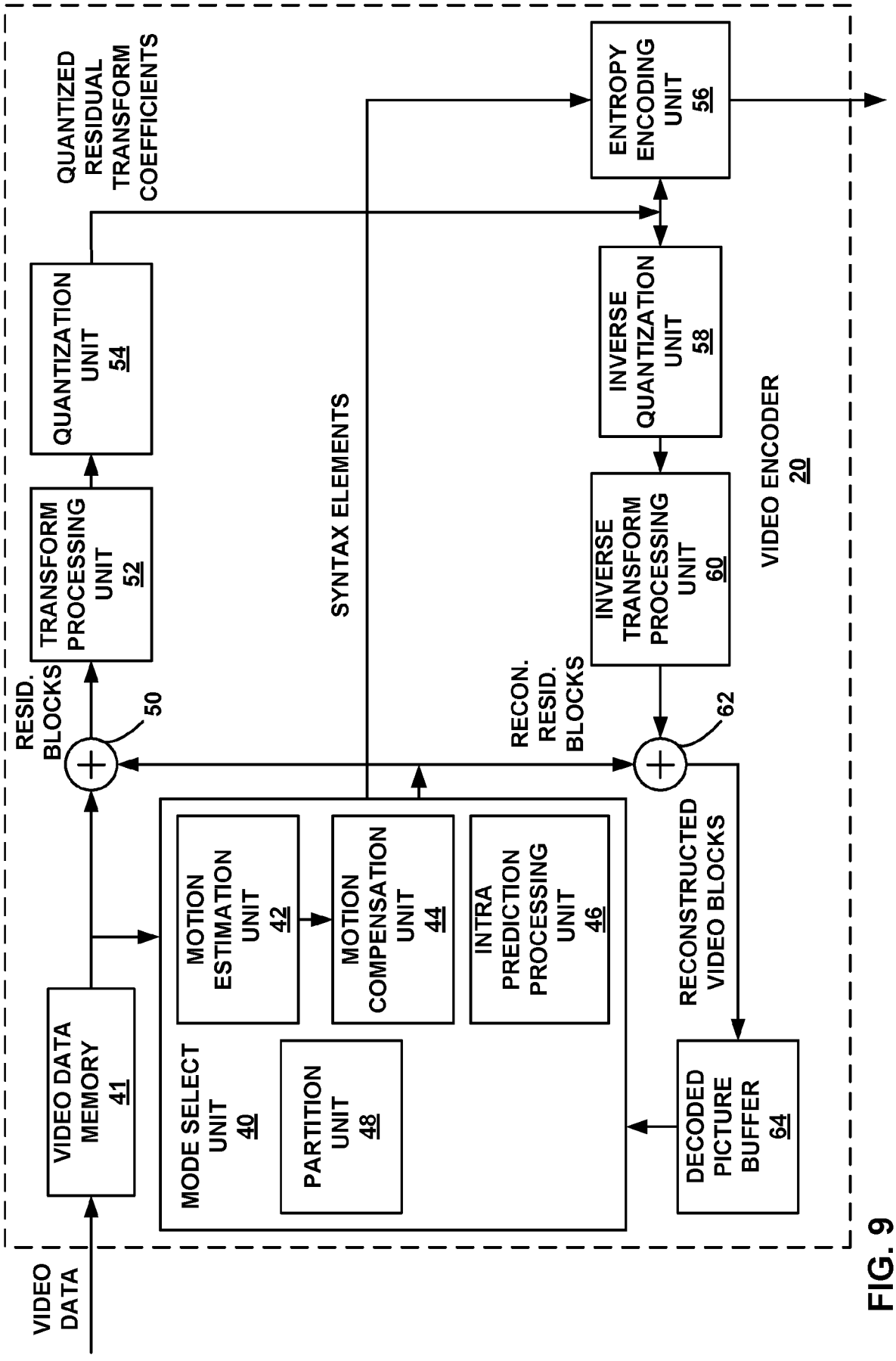
VIDEO DATA
VIDEO DATA MEMORY 41
MODE SELECT UNIT 40
MOTION ESTIMATION UNIT 42
MOTION COMPENSATION UNIT 44
INTRA PREDICTION PROCESSING UNIT 46
PARTITION UNIT 48
RESID. BLOCKS
50
TRANSFORM PROCESSING UNIT 52
QUANTIZATION UNIT 54
QUANTIZED RESIDUAL TRANSFORM COEFFICIENTS
SYNTAX ELEMENTS
ENTROPY ENCODING UNIT 56
INVERSE QUANTIZATION UNIT 58
INVERSE TRANSFORM PROCESSING UNIT 60
RECON. RESID. BLOCKS
62
RECONSTRUCTED VIDEO BLOCKS
DECODED PICTURE BUFFER 64
VIDEO ENCODER 20

FIG. 9

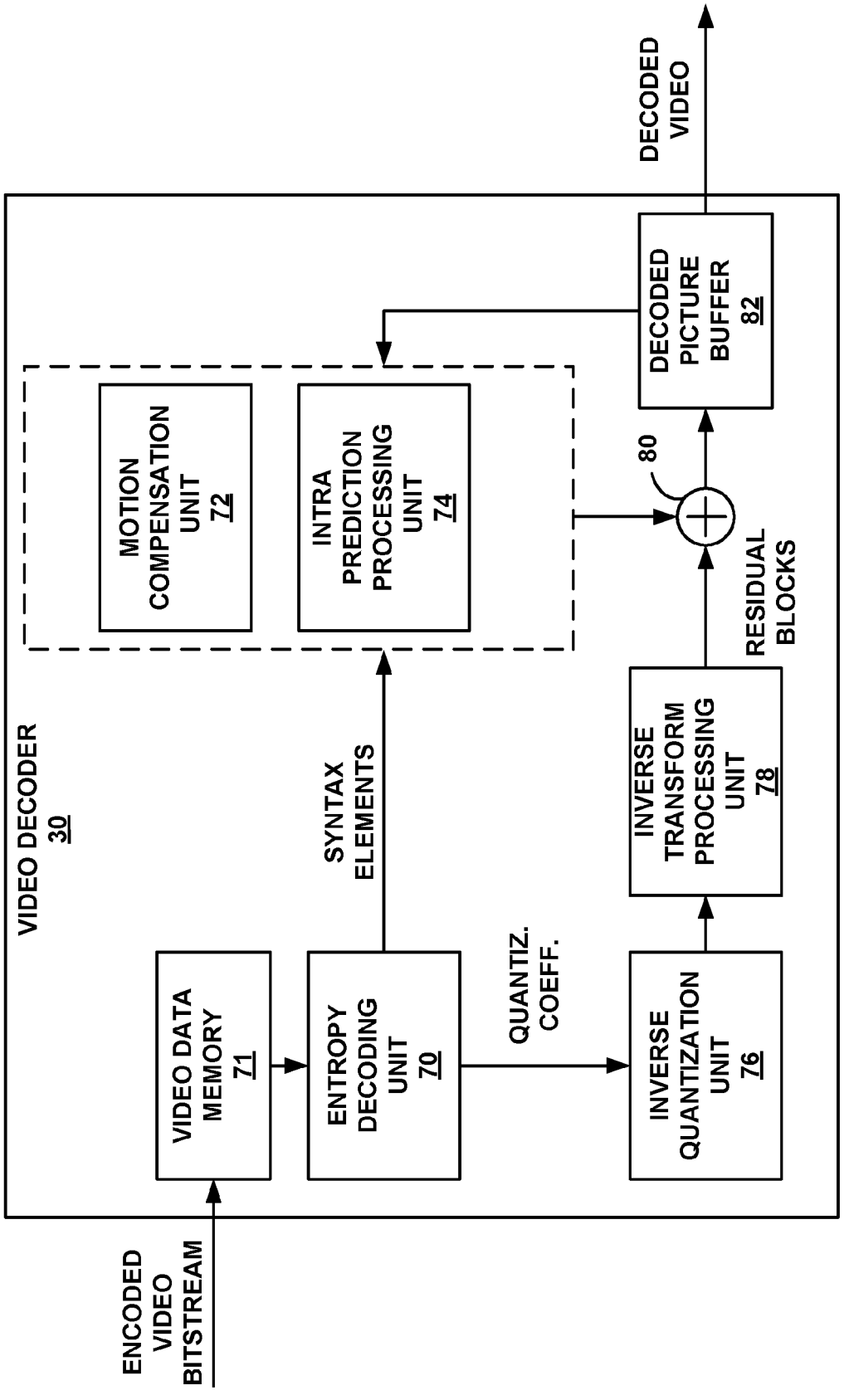
ENCODED VIDEO BITSTREAM
VIDEO DECODER 30
VIDEO DATA MEMORY 71
ENTROPY DECODING UNIT 70
SYNTAX ELEMENTS
MOTION COMPENSATION UNIT 72
INTRA PREDICTION PROCESSING UNIT 74
QUANTIZ. COEFF.
INVERSE QUANTIZATION UNIT 76
INVERSE TRANSFORM PROCESSING UNIT 78
RESIDUAL BLOCKS
80
DECODED PICTURE BUFFER 82
DECODED VIDEO

FIG. 10

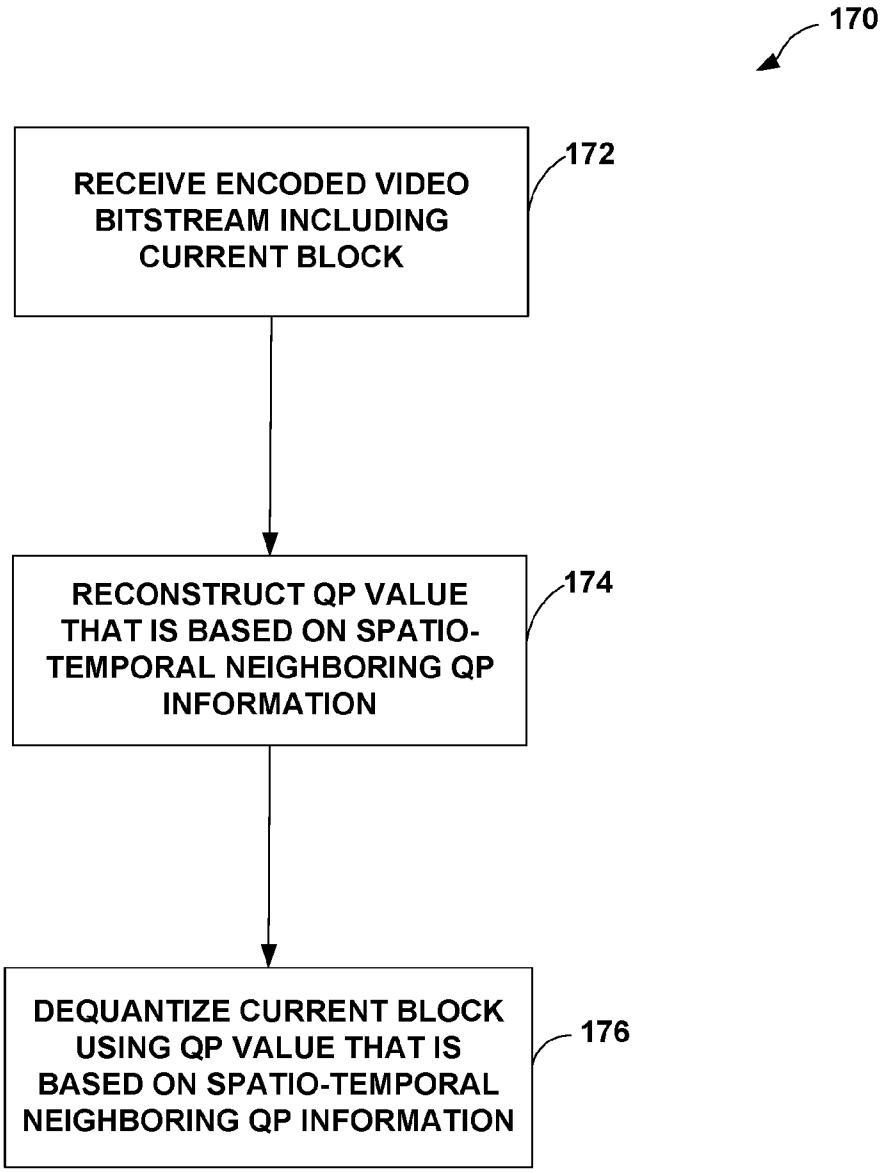
170
RECEIVE ENCODED VIDEO BITSTREAM INCLUDING CURRENT BLOCK
172
RECONSTRUCT QP VALUE THAT IS BASED ON SPATIO-TEMPORAL NEIGHBORING QP INFORMATION
174
DEQUANTIZE CURRENT BLOCK USING QP VALUE THAT IS BASED ON SPATIO-TEMPORAL NEIGHBORING QP INFORMATION
176

FIG. 11

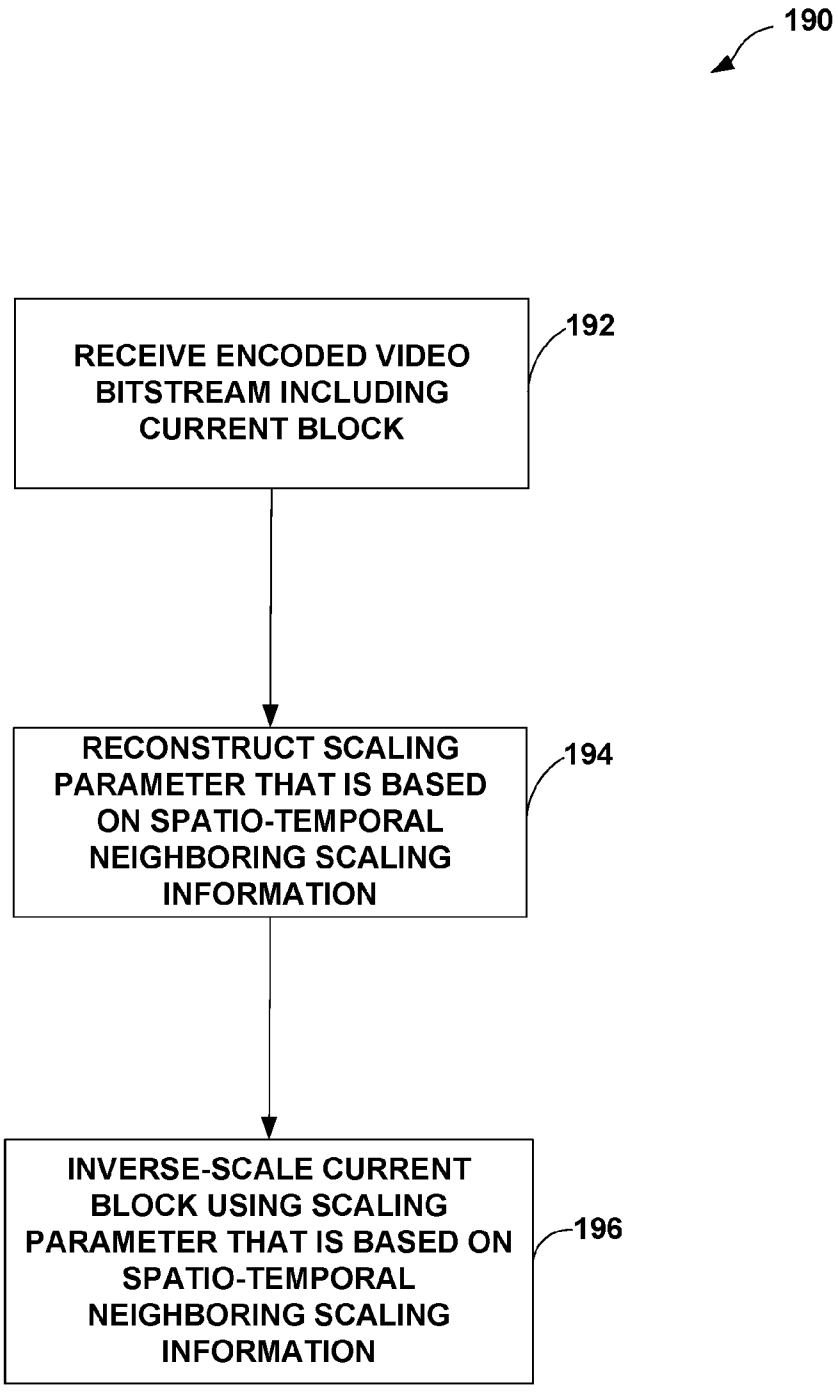
190
RECEIVE ENCODED VIDEO BITSTREAM INCLUDING CURRENT BLOCK
192
RECONSTRUCT SCALING PARAMETER THAT IS BASED ON SPATIO-TEMPORAL NEIGHBORING SCALING INFORMATION
194
INVERSE-SCALE CURRENT BLOCK USING SCALING PARAMETER THAT IS BASED ON SPATIO-TEMPORAL NEIGHBORING SCALING INFORMATION
196

FIG. 12

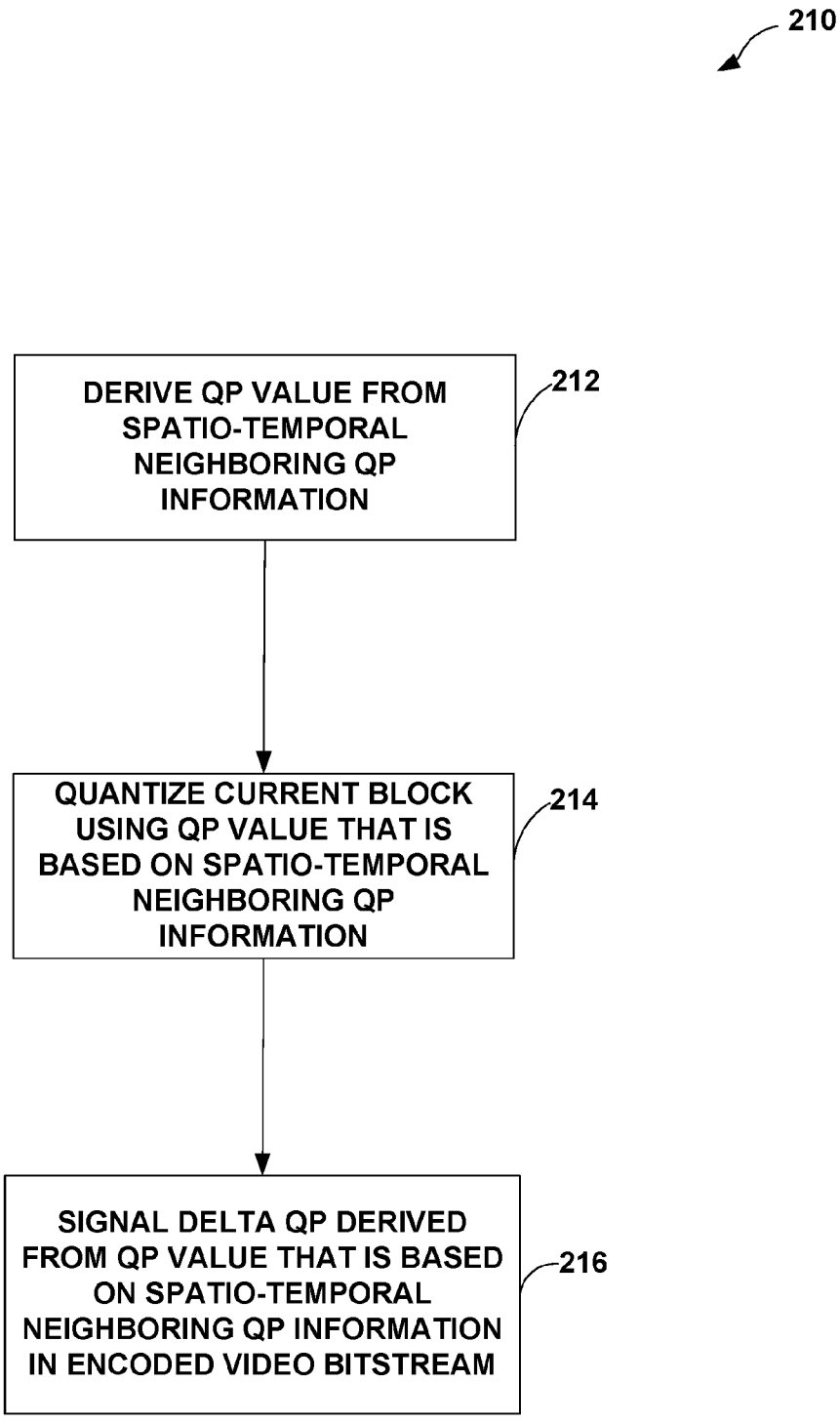
210
DERIVE QP VALUE FROM SPATIO-TEMPORAL NEIGHBORING QP INFORMATION
212
QUANTIZE CURRENT BLOCK USING QP VALUE THAT IS BASED ON SPATIO-TEMPORAL NEIGHBORING QP INFORMATION
214
SIGNAL DELTA QP DERIVED FROM QP VALUE THAT IS BASED ON SPATIO-TEMPORAL NEIGHBORING QP INFORMATION IN ENCODED VIDEO BITSTREAM
216

FIG. 13

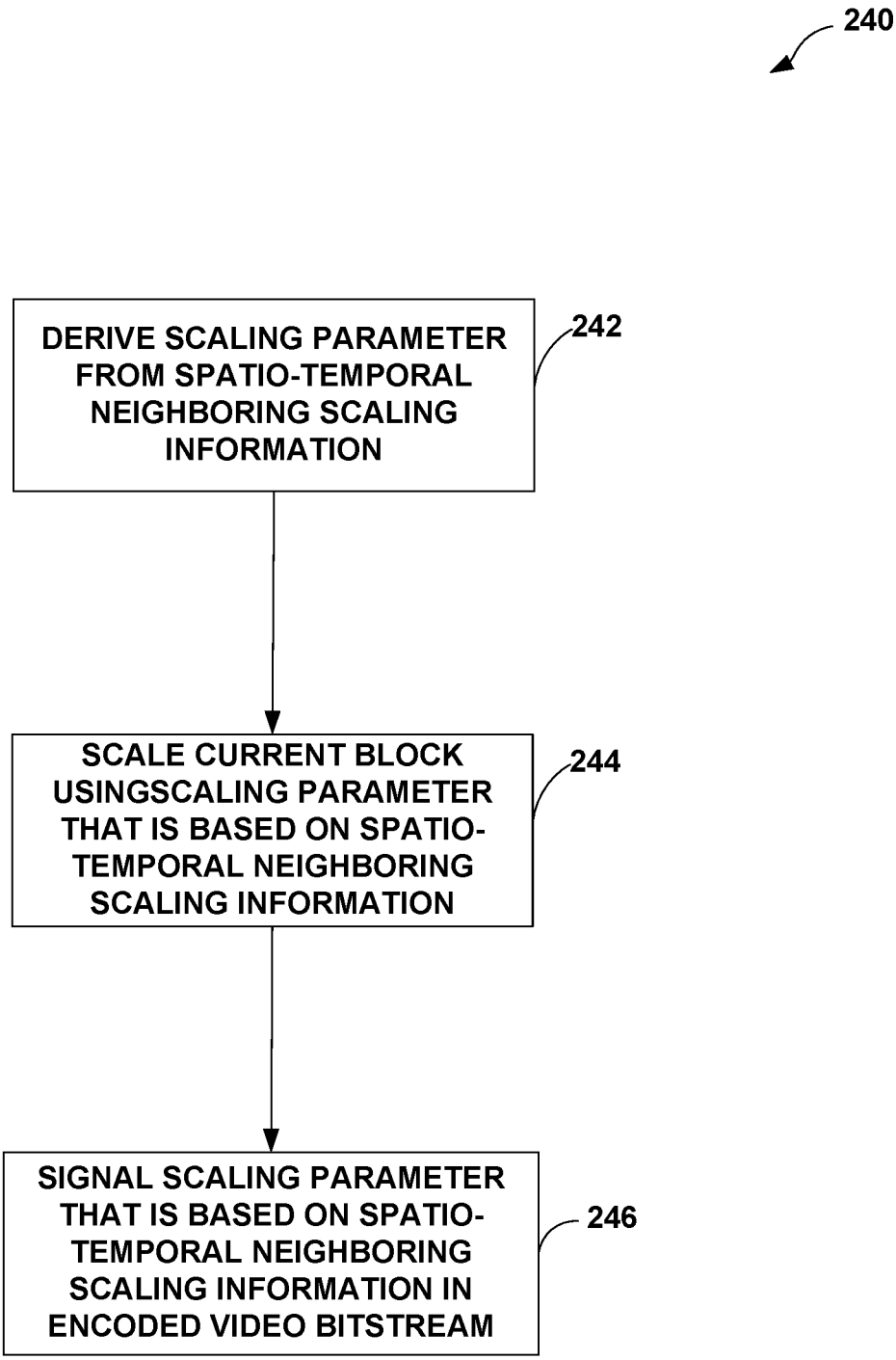
240
DERIVE SCALING PARAMETER FROM SPATIO-TEMPORAL NEIGHBORING SCALING INFORMATION
242
SCALE CURRENT BLOCK USINGSCALING PARAMETER THAT IS BASED ON SPATIO-TEMPORAL NEIGHBORING SCALING INFORMATION
244
SIGNAL SCALING PARAMETER THAT IS BASED ON SPATIO-TEMPORAL NEIGHBORING SCALING INFORMATION IN ENCODED VIDEO BITSTREAM
246

FIG. 14