FIG. 1

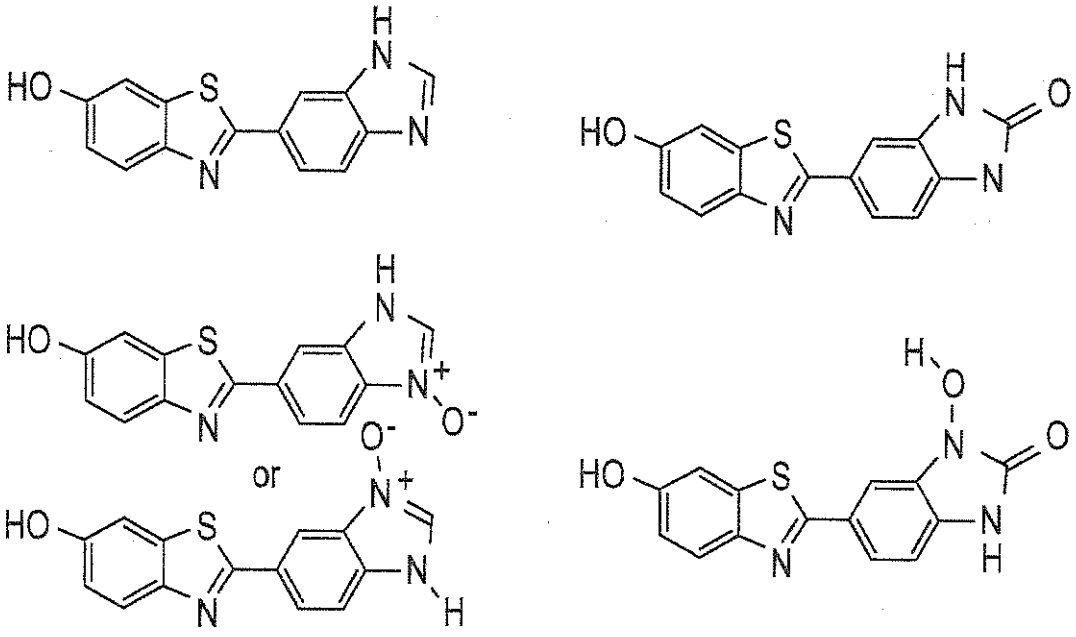

FIG. 2

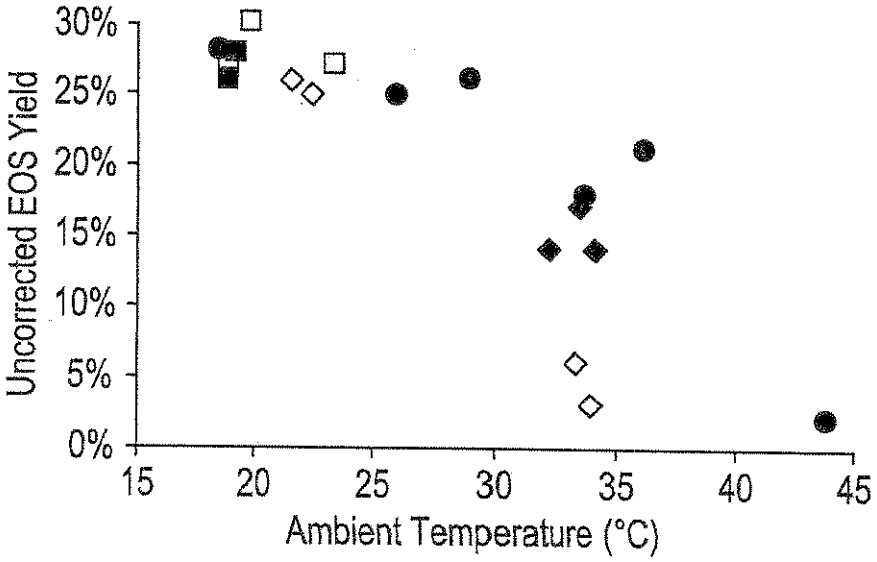

Key : EOS=end of synthesis

□ 39.0% MeCN

■ 39.5% MeCN

● 40.0% MeCN

◆ 40.5% MeCN

◇ 41.0% MeCN

FIG. 3

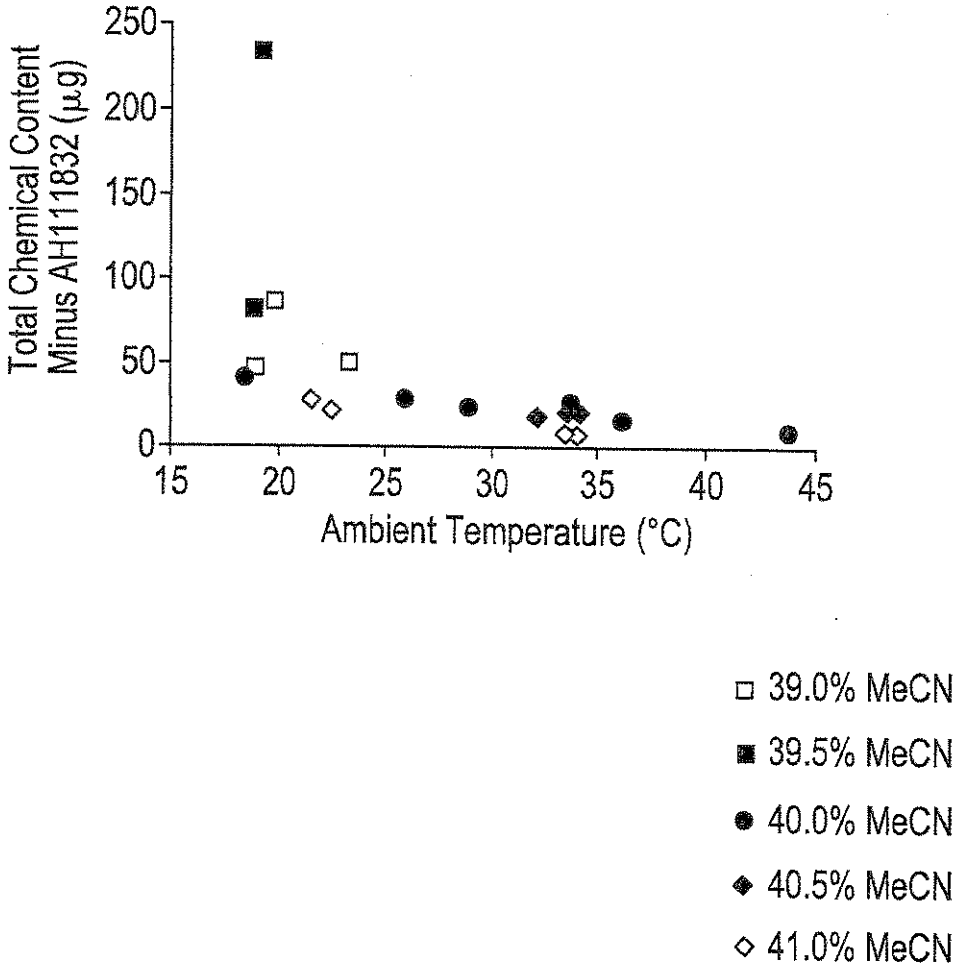
Total Chemical Content
Minus AH111832 (µg)
250
200
150
100
50
0
15
20
25
30
35
40
45
Ambient Temperature (°C)
39.0% MeCN
39.5% MeCN
40.0% MeCN
40.5% MeCN
41.0% MeCN

FIG. 4

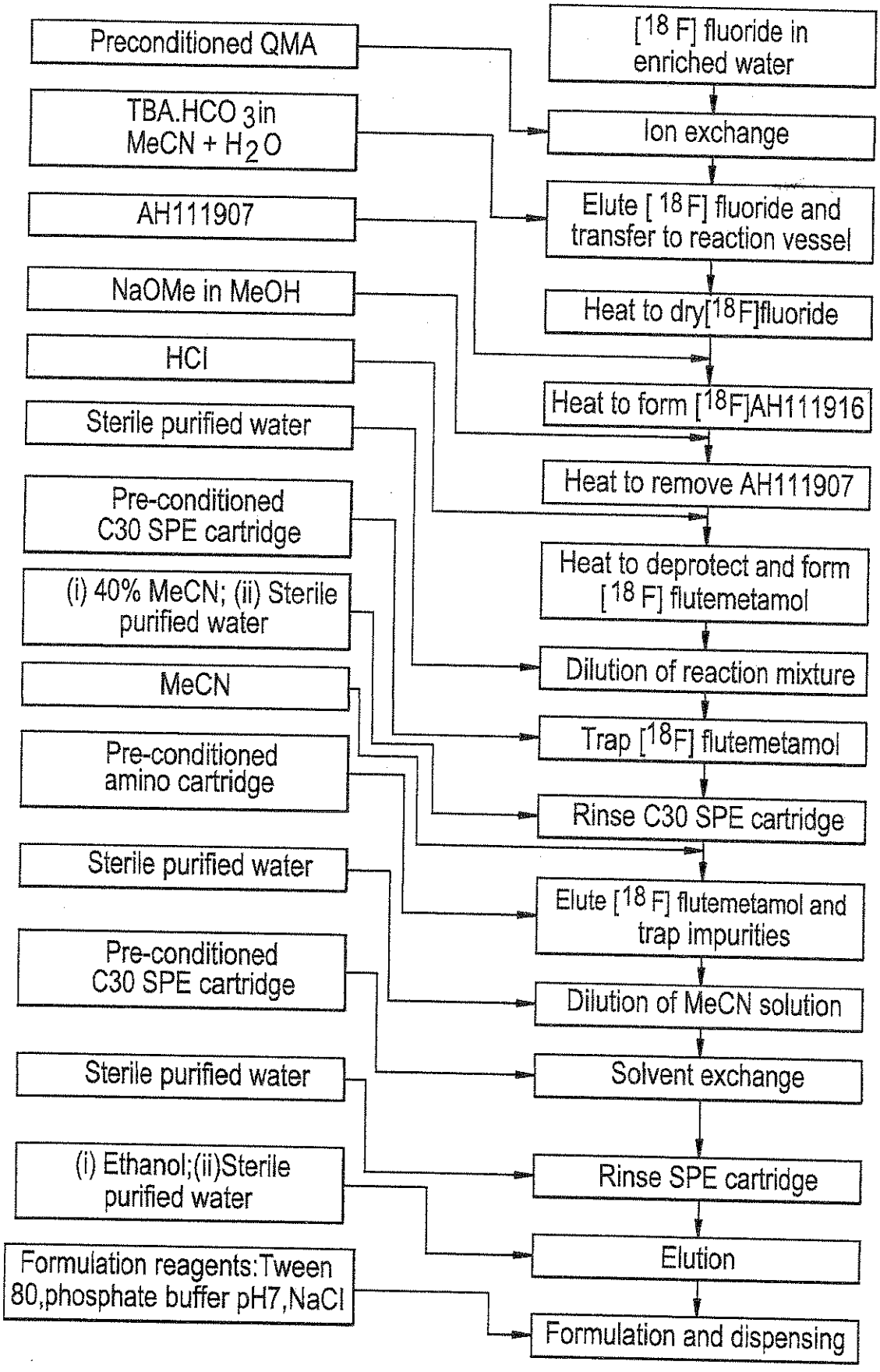
Preconditioned QMA
TBA.HCO 3in MeCN + H2O
AH111907
NaOMe in MeOH
HCl
Sterile purified water
Pre-conditioned C30 SPE cartridge
(i) 40% MeCN; (ii) Sterile purified water
MeCN
Pre-conditioned amino cartridge
Sterile purified water
Pre-conditioned C30 SPE cartridge
Sterile purified water
(i) Ethanol;(ii)Sterile purified water
Formulation reagents:Tween 80,phosphate buffer pH7,NaCl
[18 F] fluoride in enriched water
Ion exchange
Elute [18 F] fluoride and transfer to reaction vessel
Heat to dry[18 F]fluoride
Heat to form [18F]AH111916
Heat to remove AH111907
Heat to deprotect and form [18 F] flutemetamol
Dilution of reaction mixture
Trap [18F] flutemetamol
Rinse C30 SPE cartridge
Elute [18 F] flutemetamol and trap impurities
Dilution of MeCN solution
Solvent exchange
Rinse SPE cartridge
Elution
Formulation and dispensing

FIG. 5

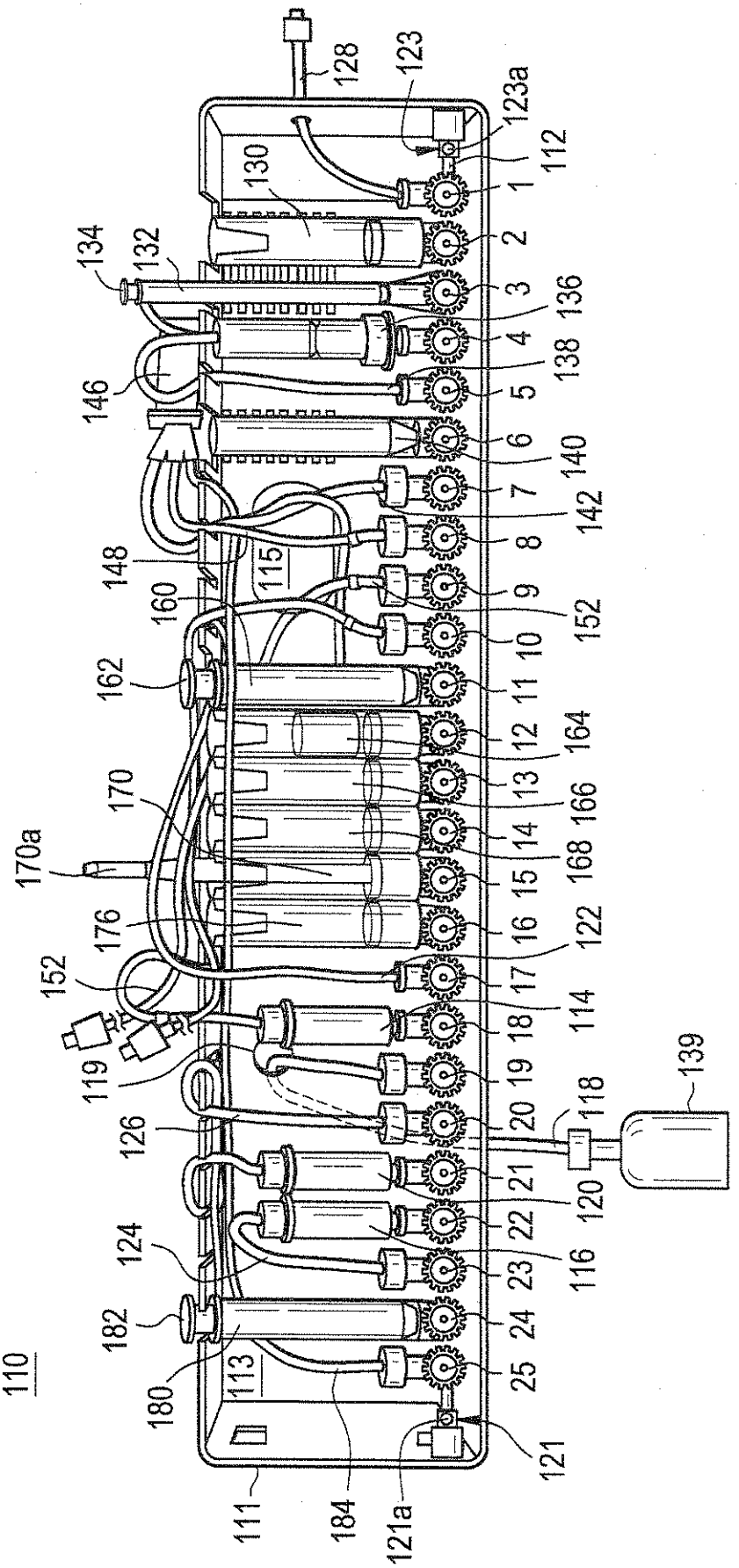
110
111
113
115
119
121
121a
123
123a
124
126
128
130
132
134
136
138
139
140
142
146
148
152
160
162
164
166
168
170
170a
172
176
180
182
184
112
114
116
118
120
122
1
2
3
4
5
6
7
8
9
10
11
12
13
14
15
16
17
18
19
20
21
22
23
24
25

FIG. 6

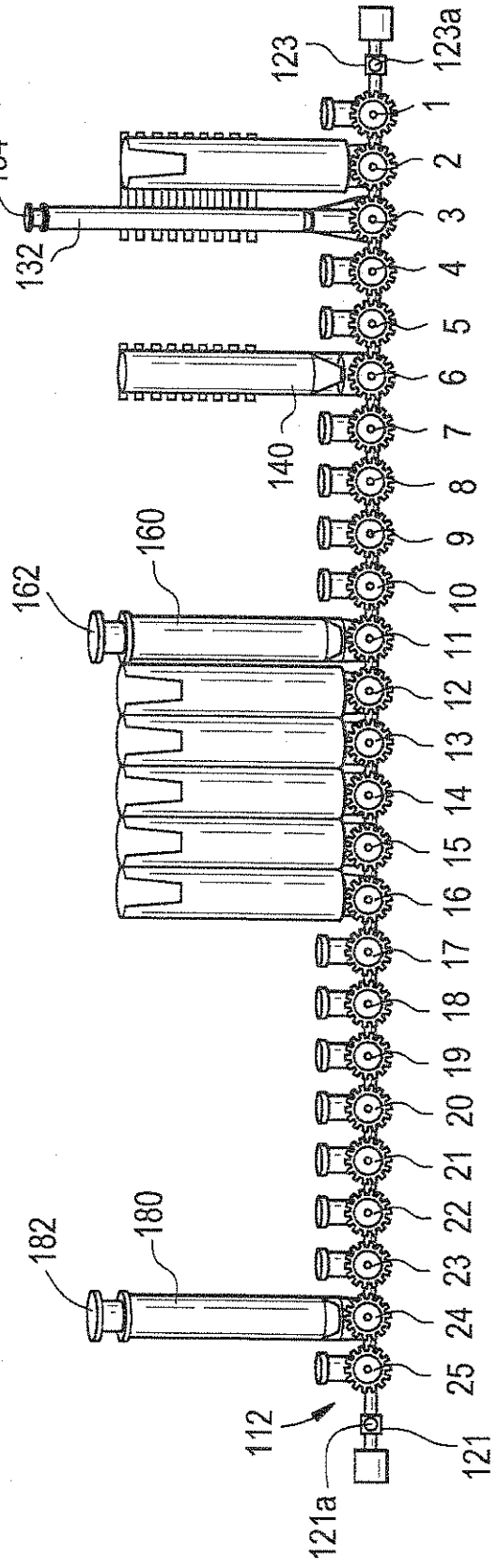
123
123a
1
2
3
4
5
6
7
8
9
10
11
12
13
14
15
16
17
18
19
20
21
22
23
24
25
134
132
140
160
162
180
182
112
121
121a

FIG. 7

Raw material	Function
Solution of [^{18}F] fluoride in H_2[^{18}O)target water	Incoming supply of [^{18}F]fluoride to FASTlab
Solution of tetrabutylammonium bicarbonate in 80% acetonitrile:20% water (v/v)	Elution of [^{18}F]fluoride from QMA and phase transfer catalyst
Solution of AH111907 (6-ethoxymethoxy-2-(4'-N-Formyl-N-methyl)amino-3'-nitro)phenylbenzothiazole) in DMSO	Final intermediate
Solution of sodium methoxide in methanol	Conversion of unlabelled precursor
Aqueous solution of hydrochloric acid	Deprotection of radiolabelled intermediate
FASTlab water bag	Multi-purpose (including dilution and cassette rinsing)
Ethanol	Elution of drug substance from C30 cartridges
Acetonitrile/water	Washing of impurities from C30 cartridge
Acetonitrile	Conditioning of cartridges, elution of flutemetamol from C30 cartridge
Product collection vial	Formulation and solubilisation of drug substance
Waters QMA light carbonate	Fluoride recovery from [^{18}O] enriched water
C30 SPE cartridge	Primary purification of crude product, solvent exchange
Varian bond elut JR-NH_2 cartridge	Secondary purification of drug substance

FIG. 8

MANIFOLD POSITION	CASSETTE COMPONENT
	Cassette manifold
1	Silicone tubing (14cm) to target recovery vessel
2	Tetrabutylammonium bicarbinate eluent vial
3	1 ml syringe (part of manifold)
4	QMA cartridge with silicone tubing (14cm) to position 5
5	Silicone tubing (14cm) to QMA cartridge at position 4
6	Fluoride inlet reservoir (part of manifold)
7	Silicone tubing (14cm) to reactor vessel left hand side
8	Silicone tubing (14cm) with yellow markings to reactor vessel central port
9	Silicone tubing (42cm) with red markings to 40% MeCN:60% water (V/V) vial
10	Silicone tubing (42cm) with blue markings to 100% MeCN vial
11	5ml syringe (part of manifold)
12	AH111907 (6-Ethoxymethoxy-2-(4'-(N-formyl-N-methyl)amino-3'-nitro)phenylbenzothiazole)vial
13	Hydrochloric acid vial
14	Sodium methoxide vial
15	Water bag spike
16	Ethanol vial
17	Silicone tubing (14cm) to C30 car cartridge at position 18
18	C30 cartridge with silicone tubing (14cm) to position 17
19	Tygon tubing (50cm) to product collection vial
20	Silicone tubing (14cm) to amino cartridge at position 21
21	Amino cartridge with silicone tubing (14cm) to position 20
22	C30 cartridge with tygon tubing (8cm) to position 23
23	Tygon tubing (8cm) to C30 cartridge at position 22
24	5ml syringe (part of manifold)
25	Silicone tubing (42cm) to reactor vessel right hand side

FIG. 9

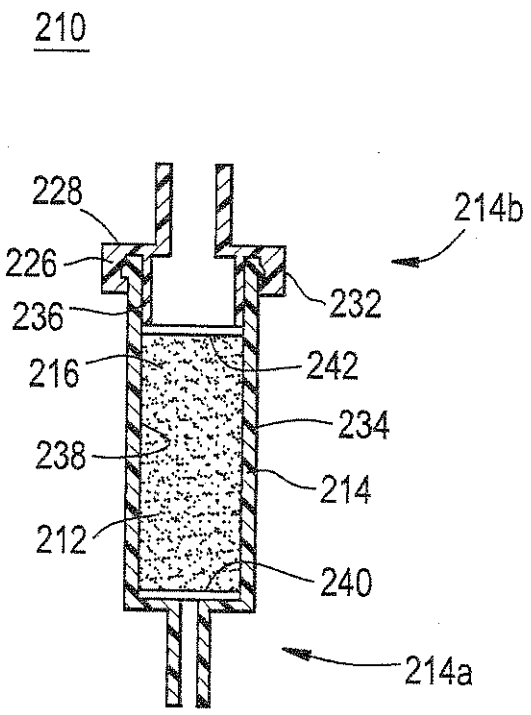

FIG. 10

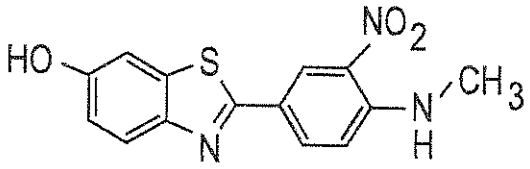

AH111832

FIG. 11

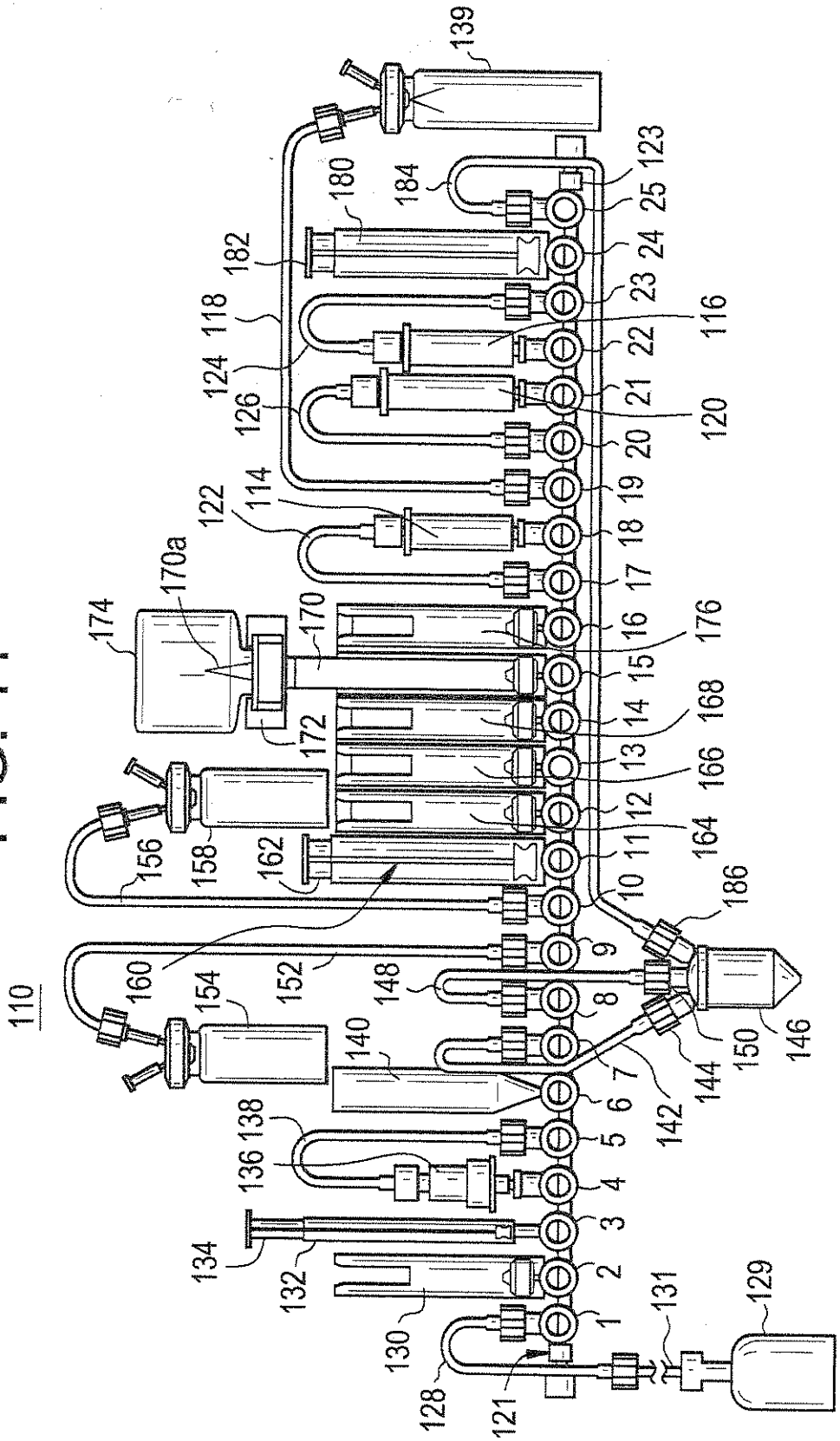
110
139
123
25
24
23
22
21
20
19
18
17
16
15
14
13
12
11
10
9
8
7
6
5
4
3
2
1
184
180
182
118
124
126
116
120
122
114
170a
174
170
172
176
168
166
164
156
158
162
160
152
154
148
140
186
146
150
144
142
136
138
134
132
130
128
121
131
129