明 細 書

ワイパーブレードおよびその製造方法

技術分野

本発明は、ワイパーブレードおよびその製造方法に関し、とくに撥水処理を施したガラスなどの表面拭き取り性に優れたワイパーブレードおよびその製造方法に関する。

背景技術

本発明は、ワイパーブレードおよびその製造方法に関し、とくに撥水処理を施したガラスなどの表面拭き取り性に優れたワイパーブレードおよびその製造方法に関する。

自動車、電車などに使用される車両用ワイパーは、通常ワイパーブレード部分がガラス表面に摺接することにより、運転席の視界を確保している。このため、ワイパーブレードは、柔軟性や復元性が高いこと、耐水性や耐候性、耐摩耗性などの耐久性に優れていること、ばたばたと動くようなビビリ振動がなく拭き取り性能に優れていることなどが要求されている。

従来、このような要求特性を満たすため、ハロゲン化処理にて表面を硬化して表面すべり性や耐摩耗性を付与したゴム材料がワイパーブレード材として多用されていた。さらに、表面すべり性や耐摩耗性などの特性を改善するために、二硫化モリブデンやグラファイトが混合されたバインダーを表面に塗布したワイパーブレード（特開昭 55-113545号公報）、ポリフッ化ビニリデンやポリ塩化ビニル、ポリウレタンなどの被膜をつけたワイパーブレード（特開平 5-97015号公報）等が知られている。

また、シリコーンゴムおよび固体潤滑剤を含有するゴム、プラスチックの低摩擦、高耐摩耗用樹脂被覆材も知られている（特開平 8-48800号公報）。

しかしながら、単にハロゲン化処理を施したワイパーブレードは、十分なすべり性が得られず、とくにワックスなどが付着したガラス面ではワイパーブレードのすべりが悪く、ビビリ振動を起こし、拭き取り性が悪くなる。ハ

ロゲン化処理の程度を高めるとワイパーブレードの表面に亀裂が入りやすくなり拭き筋が残ってしまうという問題がある。

また、バインダーを表面に塗布したワイパーブレード（特開昭 55-113545号公報）にあっては、ビビリ振動がなく拭き取り性能に優れているのは初期のみであって、長期間使用すると表面に塗布したバインダーが剥がれてしまい、ビビリ振動を起こし、拭き取り性が悪くなるという問題がある。

さらに、被膜をつけたワイパーブレード（特開平 5-97015号公報や特開平 8-48800号公報）は、清浄なガラス面に対しては効果を示すが、ワックスや埃、砂などが付着したガラス面や、雨滴をはじくように撥水処理を施したガラス面に対しては、ビビリ振動を起こし、拭き取り性が悪くなるという問題がある。

このように、従来のワイパーブレードは耐久性や拭き取り性に劣り、とくに撥水処理を施したガラス表面に対する拭き取り性が悪くなるという問題がある。

本発明は、このような問題に対処するためになされたもので、柔軟性や復元性が高く、耐水性や耐候性、耐摩耗性などの耐久性に優れ、どのようなガラス表面に対してもビビリ振動がなく拭き取り性能に優れていると共に、その性能が長期間維持することができるワイパーブレードおよびその製造方法を提供することを目的とする。

発明の開示

本発明に係るワイパーブレードは、ゴム弾性体よりなるブレード本体と、この本体表面に、分子内に反応性基を有するフッ素系樹脂と、このフッ素系樹脂の反応性基と反応性を有する硬化剤とからなる表面被覆層を有するワイパーブレードであって、表面被覆層は、ブレード本体の両側面のみに形成されてなることを特徴とする。

また、表面被覆層が分子内に反応性基を有するフッ素系樹脂 100重量部に対して固体潤滑材 10 ～110 重量部配合してなることを特徴とする。

本発明に係る他のワイパーブレードは、ゴム弾性体よりなるブレード本体と、この本体表面に、分子内に反応性基を有するフッ素系樹脂と、このフッ

素系樹脂の反応性基と反応性を有する硬化剤とからなる表面被覆層を有するワイパーブレードであって、表面被覆層は、分子内に反応性基を有するフッ素系樹脂 100重量部に対して固体潤滑材 10 ～110 重量部配合してなることを特徴とする。

上述のワイパーブレードは、フッ素系樹脂の反応性基が水酸基であり、硬化剤がイソシアネート化合物およびメラミン樹脂類の少なくとも一つであることを特徴とする。

また、表面被覆層が、四フッ化エチレン樹脂を含有し、および／または有機ケイ素系弾性体を含有してなることを特徴とする。さらに、固体潤滑材が、グラファイトであることを特徴とする。

また、表面被覆層が、少なくとも 1層の撥水処理を施した透光体表面と摺接することを特徴とする。

本発明に係るワイパーブレードの製造方法は、ワイパーブレードの幅方向に複数個連続してブレード本体を形成する工程と、このブレード本体の表面に表面被覆層を形成する工程と、この表面被覆層が形成されたブレード本体をワイパーブレードの長さ方向に平行に切断する工程とにより、ブレード本体の両側面のみに表面被覆層を有するワイパーブレードを製造することを特徴とする。ここで、所定の厚さを有するワイパーブレードの長辺部分を長さ方向と、短辺部分を幅方向とする。

この方法により、エッヂ精度を高めてブレード本体の両側面のみに表面被覆層を形成することができる。

本発明に係るワイパーブレードの両側面とは、ワイパー作動時に少なくともガラス表面と摺接する面をいい、この両側面のみに表面被覆層を有するとは、表面被覆層がガラス表面と摺接する両側面に形成され、ワイパーブレード先端面には表面被覆層がないことをいう。

ワイパーブレードをこのような構造にすると共に、表面被覆層を分子内に水酸基を有するフッ素系樹脂と、この水酸基と反応性を有する硬化剤とからなる層とすることにより、表面被覆層がゴム弾性体よりなるブレード本体の表面と強固に密着しブレードの耐久性を著しく改善する。またフッ素系樹脂 100重量部に対して固体潤滑材 10 ～110 重量部含有する表面被覆層とする

ことにより、少なくとも 1層の撥水処理を施した透光体表面、たとえばガラス表面に対して優れた拭き取り性や耐久性を得ることができる。さらに、四フッ化エチレン樹脂や有機ケイ素系弾性体を含有することにより、表面被覆層の耐摩耗性やすべり性がさらに向上する。

また、とくに固体潤滑材をフッ素系樹脂 100重量部に対して 10 ～110 重量部含有する表面被覆層とすることにより、ワイパーブレード先端面に表面被覆層を設けた場合であっても、撥水処理を施したガラス表面等に対して優れた拭き取り性や耐久性を得ることができる。

さらに、固体潤滑材がグラファイトであると上述の特性がより向上する。

図面の簡単な説明

図１は、ワイパーブレードの断面図である。

図２Ａおよび図２Ｂは、ワイパーブレード製造方法の一例を示す図である。

図３は、摩擦係数と摩耗量を測定するための概要図である。

図４は、実施例７により得られるワイパーブレードの断面図である。

発明を実施するための最良の形態

本発明に係るワイパーブレード本体を形成するゴム弾性体は、ワイパーブレード作動時において、ゴム弾性を示す物体ならばとくに制限なく使用することができる。具体的には、天然ゴム（ＮＲ）、イソプレンゴム（ＩＲ）、スチレンブタジエンゴム（ＳＢＲ）、ブタジエンゴム（ＢＲ）、クロロプレンゴム（ＣＲ）、アクリロニトリルブタジエンゴム（ＮＢＲ）、エチレンプロピレン系ゴム等を挙げることができる。とくに撥水処理を施したガラス面に対してビビリ振動を起こすことなく、良好な拭き取り性を示すゴム弾性体としては、天然ゴム（ＮＲ）およびスチレンブタジエンゴム（ＳＢＲ）が好ましい。

これらゴム弾性体は、ＪＩＳ　Ｋ　６３０１　に準じて測定されたゴム硬度が 50 ～ 80 ° であることがワイパーブレードの柔軟性や復元性を維持する上で好ましい。さらに、耐候性を向上させるために、オゾン吸収剤、老化防止剤、ワックスなどの滑剤等が配合されていてもよい。

また、表面被覆層との密着性を向上させる目的で、ゴム弾性体の表面を、たとえば、ハロゲン化処理、低温プラズマ処理、コロナ放電処理、紫外線照射処理などの表面処理手段により処理することが好ましい。本発明に係る表面被覆層との密着性向上に関しては、とくにハロゲン化処理が好ましく、処理方法としては、塩素化処理、臭素化処理、ヨウ素化処理、フッ素化処理などを挙げることができる。

本発明の表面被覆層を構成する分子内に反応性基を有するフッ素系樹脂は、フッ素系樹脂の側鎖または分子鎖末端に反応性基を有するもので、反応性基としては、水酸基（-OH）、イソシアネート基（-NCO）、カルボキシル基（-COOH）、－ＮＨＲ基（ここでＲは、水素、アルキル基、もしくはアルコシキル基）、メルカプト基（-SH）、エポキシ基、アセトキシ基（$-COOCH_3$）、スルホン酸基（$-SO_3H$）等を挙げることができる。本発明にあっては、とくに水酸基（-OH）を分子内に有するフッ素系樹脂が好ましく、具体的にはフルオロオレフィン単位とビニルエーテル単位とからなる共重合体であって、ビニルエーテル単位に水酸基を有するフッ素系樹脂が好適である。

また、$-C_xF_{2x}-O-$（ここで、x は 1～4 の整数）を主要構造単位とする平均分子量約 1000 ～10000 程度の重合体の側鎖または分子鎖末端に上述の反応性基を有するフッ素系樹脂を使用することもできる。

分子内に反応性基を有するフッ素系樹脂と反応する硬化剤としては、フッ素系樹脂の反応性基と反応する官能基を有する硬化剤であれば使用することができる。とくに反応性基が水酸基である場合は、イソシアネート基（-NCO）や－ＮＨＲ基を有する硬化剤が好ましい。これらは単独でも混合物としても使用することができる。

イソシアネート基（-NCO）を有する硬化剤としては、脂肪族基や脂環族基、芳香族基にイソシアネート基が 2個以上結合しているポリイソシアネート類を挙げることができる。具体的には、ヘキサメチレンジイソシアネート、フェニレンジイソシアネート、トリレンジイソシアネート、ジフェニルメタンジイソシアネート、ナフタレンジイソシアネート等がある。これらは、単量体であっても 2量体、 3量体であっても使用することができる。さらに活性なイソシアネート基をフェノール系化合物やカプロラクタム等でブロックし

たブロックイソシアネート類、あるいはポリオールとポリイソシアネートとの反応生成物であって末端にイソシアネート基を有するポリイソシアネート類等も使用することができる。

水酸基（-OH）を有するフッ素系樹脂とイソシアネート基（-NCO）を有する硬化剤との配合割合は、水酸基（-OH）とイソシアネート基（-NCO）との当量比で 1： 0.5～1.1 の範囲が好ましく、とくに表面被覆層に柔軟性を付与し、ワイパーブレードの拭き取り性を向上させるためには 1： 0.6～1 の範囲が好ましい。

また、－ＮＨＲ基を有する硬化剤としては、メラミン樹脂を挙げることができる。具体的には、ブチル化メチロールメラミンやヘキサメトキシメチル化メラミンが好適である。

水酸基（-OH）を有するフッ素系樹脂と－ＮＨＲ基を有する硬化剤との配合割合は、重量比で 6～9 ： 1～4 の範囲がワイパーブレードの拭き取り性を向上させるために好ましい。

本発明に係る四フッ化エチレン樹脂（以下、ＰＴＦＥと略称する）は、テトラフルオロエチレンの重合体をいう。ＰＴＦＥは、塊状重合、溶液重合、懸濁重合、吹込重合、乳化重合等のいずれの重合方法により得られたものも使用できる。

また、これらの方法で得られたバージンＰＴＦＥを一度成形し、熱焼成した後、粉砕して粉末化したいわゆる再生ＰＴＦＥや、バージンＰＴＦＥをガンマ線照射などの方法で処理して粉末化したいわゆるＰＴＦＥ潤滑粉や、バージンＰＴＦＥを粉砕し、微粉末化したＰＴＦＥ粉等が好ましく使用できる。

ＰＴＦＥの平均粒径は 30 μm 以下であることが好ましく、とくに表面被覆層の層厚や表面粗さを均一にするためには、 15 μm 以下であることが好ましい。ただし、最小粒径は、ＰＴＦＥ粉が凝集を起こさない粒径以上であることが好ましい。

このようなＰＴＦＥ粉の配合量としては、分子内に反応性基を有するフッ素系樹脂 100重量部に対して、70～150 重量部であることが好ましい。70重量部未満であると表面被覆層の潤滑性に劣り、150 重量部を越えるとゴム弾性体との密着性が低下するためである。

本発明に係る有機ケイ素系弾性体は、オルガノシロキサン結合を分子主鎖に有するシリコーンであって、ゴム弾性を示すものをいう。具体的には、メチルシリコーンゴム、ビニルーメチルシリコーンゴム、フェニルーメチルシリコーンゴム、フッ化シリコーンゴムが好ましく、これらに加硫剤等を加えて 150～180 ℃で加硫して粉砕したもの、あるいは、その加硫後にさらに 190～220 ℃で 2次加硫して粉砕したものが好ましい。

有機ケイ素系弾性体の平均粒径は 1～10μm が好ましく、その配合量は分子内に反応性基を有するフッ素系樹脂 100重量部に対して、10～50重量部であることが好ましく、とくに30～50重量部が好ましい。平均粒径が10μm を越えたり、配合量が50重量部を越えたりすると表面被覆層の強度が弱くなり、耐摩耗性が悪くなる。また、平均粒径が 1μm 未満であると表面被覆層への分散性が悪くなり、すべり性や耐摩耗性が低下する。さらに配合量が 10 重量部未満であるとすべり性や耐摩耗性が改善されない。

本発明に係る固体潤滑材は、表面被覆層に配合することにより、すべり性や耐摩耗性を向上させることのできる固体粉末であれば使用することができる。具体的には、グラファイト（黒鉛）、二硫化モリブデン（ MoS_2 ）、カーボン、窒化ホウ素、フッ化黒鉛、二硫化タングステン等を挙げることができる。これらは単独でも混合物としても使用することができる。

これら固体潤滑材の中で、とくにグラファイト（黒鉛）および二硫化モリブデンが好ましい。グラファイト（黒鉛）は、人造グラファイト、天然グラファイトのいずれであってもよい。固体潤滑材の平均粒径は 0.5～12μm が好ましい。平均粒径が12μm を越えると耐摩耗性が低下し、平均粒径が 0.5μm 未満では表面被覆層への分散性が悪くなる。

固体潤滑材の配合量は、すべり性や耐摩耗性の改善、さらにはワイパーブレードのビビリ振動を抑え、拭き取り性を改善する上で大きな影響をおよぼす。

固体潤滑材は、分子内に反応性基を有するフッ素系樹脂 100重量部に対して、10～110 重量部配合する。なお、固体潤滑材としてグラファイトを使用する場合にあっては、25～ 65 重量部配合することが、ビビリ振動を抑え拭き取り性を改善する上でとくに好ましい。配合量が110 重量部を越えると耐

摩耗性が悪くなる。また、 10 重量部未満であると、すべり性や耐摩耗性が改善されず、さらにビビリ振動が起きやすくなる。とくに撥水性処理を施した透光体表面、たとえばガラス表面に対してビビリ振動が起きやすくなる。

なお、ビビリ振動と表面被覆層状態との関連を調査したところ、後述するワイパーブレード試験において優れた特性を示した本発明に係る表面被覆層は、ワイパーブレードの長さ方向に横縞がみられた。

本発明に係る透光体とは、光を透過する透明な物質をいう。透明な物質としては、板ガラス、強化ガラス、合わせ板ガラスなどのガラス類や透明アルミナなどの透明セラミックス類、アクリル樹脂などの透明プラスチックス類を挙げることができる。

また、撥水処理を施すとは、たとえばシリコーン系やフッ素系の撥水剤で処理することをいう。シリコーン系の撥水剤は、たとえばガラス面に塗り込むタイプやウインドウオッシャー液タイプがあり、前者の例としては「スーパーレインX」、「スーパーレインX ｐｌｕｓ」（以上錦之堂社より市販されている商品名）、「ソフト９９ガラコ」、「ぬりぬりガラコ」（以上ソフト９９社より市販されている商品名）等があり、後者の例としては、「スーパーウオッシャーゼット」（アウグ社より市販されている商品名）、「ガラコウオッシャー液」（ソフト９９社より市販されている商品名）等がある。

フッ素系の撥水剤の例としては、「超ガラコ」（ソフト９９より市販されている商品名）、「日産撥水システム」（日産自動車社より市販されている商品名）等のガラス面に塗り込むタイプを例示することができる。

これらの撥水処理層は、 1層ある場合でもワイパーブレードのビビリ振動を起こしやすくなる。

本発明に係る表面被覆層は、上述の本発明の効果を損なわない範囲で各種の配合剤を配合することができる。

そのような配合剤の例としては、マイカ、タルク、カオリン、炭酸カルシウム、硫酸カルシウム等の無機充填剤類、ポリアミド樹脂、ポリイミド樹脂、ポリアミドイミド樹脂、ポリエーテルイミド樹脂、ポリフェニレンサルファイド樹脂、ポリエチレン、ポリプロピレン等のポリオレフィン樹脂、ポリアセタール樹脂、芳香族ポリエステル樹脂、芳香族ポリエーテルケトン樹脂、

芳香族ポリエーテルエーテルケトン樹脂、ポリウレタン樹脂等の樹脂類、フッ素ゴム、ウレタンゴム、ポリエチレン系ゴム、ポリブタジエンゴム、熱可塑性エラストマー等のゴム類、チタン酸カリウム繊維、ガラス繊維、炭素繊維、ホウ酸アルミニウムウィスカー、ウォラストナイト、アラミド繊維等の繊維類などを挙げることができる。

表面被覆層を形成するための被膜形成液は、分子内に反応性基を有するフッ素系樹脂と、硬化剤と、さらに、四フッ化エチレン樹脂や有機ケイ素系弾性体、固体潤滑材との混合物を有機溶媒等に溶解または分散させて得られる。ここで、混合物の混合方法は、フッ素系樹脂に予めＰＴＦＥ、有機ケイ素系弾性体、各種の配合剤を混合しておいて、それと硬化剤とを混合する方法、ＰＴＦＥ、有機ケイ素系弾性体、各種の配合剤を予めミキサーで混合して、その混合物とフッ素系樹脂とを混合後、さらに硬化剤を混合する方法、フッ素系樹脂を含めすべての配合剤を一度に混合する方法等、種々の方法をとることができる。

本発明に係るワイパーブレードについて図１により説明する。図１はワイパーブレードの断面図を示す。

図１において、ワイパーブレード１は、ガラス面と摺接する摺接部２と、ワイパーの固定部に固定される固定部３とから構成され、ブレード本体の両側面となる摺接部２の表面に表面被覆層４が形成されている。なお、ワイパーブレード先端面５には表面被覆層が形成されていない。このような形状とすることにより、本発明に係るワイパーブレード１は撥水処理を施したガラス表面においても、ビビリ振動を起こすことなく優れた拭き取り性を示し、この優れた性質はフッ素系樹脂 100重量部に対して固体潤滑材 10 ～110 重量部含有してなる表面被覆層とすること等により、さらに向上する。

ブレード本体の表面に形成される表面被覆層の形成方法はブレード本体の表面に平滑で均一に形成できる方法であればとくに制限されない。たとえば、スプレー法、ディッピング法、刷毛塗り法等の方法を採用することができる。これらの方法において、上述の混合物は、トルエン、ソルベントナフサなどの芳香族類、アセトン、メチルエチルケトンなどのケトン類、酢酸メチル、酢酸エチル、酢酸イソアミル、酢酸ブチルなどのエステル類、ジエチルエー

テル、ジオキサンなどのエーテル類等の有機溶媒に溶解または分散させて得られる。

表面被覆層は、ブレード本体の表面に塗布後、温度 30 ～100 ℃で 5分～48時間熱処理を施し硬化させることにより得られる。熱処理条件は、温度 70 ～ 90 ℃で 5～15分が生産性を向上させるため好ましい。

ブレード本体の両側面に形成される表面被覆層の形成方法について図２Ａおよび図２Ｂにより説明する。図２Ａおよび図２Ｂは本発明に係るワイパーブレードの製造方法の一例を示す図である。分離されていない 2個のブレード本体６の両側面に表面被覆層４を形成する（図２Ａ）。ついで、ブレード先端面となる箇所７を切断することにより、ブレード先端面に表面被覆層がないワイパーブレード１を得ることができる（図２Ｂ）。この方法は、ワイパーブレードのエッヂ精度を高めることができるためとくに好ましい方法である。

なお、ブレード先端面５に表面被覆層が形成されない方法であれば、たとえば、ブレード本体全面に被覆層を形成した後、ブレード先端面を切断する方法であってもよい。

表面被覆層の層厚は、 2～50μm であることが好ましく、とくに 3～20μm であることがより好ましい。層厚がこれらの範囲であると、ゴム弾性体よりなるブレード本体との追随性や耐久性に優れる。層厚が薄くなると耐久性に劣り、厚くなると初期拭き取り性が低下する。

実施例、比較例に使用する材料を以下に示す。

１） 水酸基（-OH ）を有するフッ素系樹脂：フルオネートＫ７０２（大日本インキ化学工業社製、商品名）

２） ＰＴＦＥ：ＫＴＬ－８Ｆ（喜多村社製、商品名）

３） 有機ケイ素系弾性体：ＥＬ５５０４（ワッカーケミカルズイーストアジア社製、商品名）の加硫物を粉砕した粉体

４） グラファイト：黒鉛ＣＳＳＰ（日本黒鉛工業社製、商品名）

５） 二硫化モリブデン（ MoS_2 ）：モリコートマイクロサイズ（ダウコーニング社製、商品名）

６） イソシアネート化合物（硬化剤－１）：バーノックＤＮ－９９０Ｓ

（大日本インキ化学工業社製、商品名）

7） メラミン樹脂（硬化剤－2）：ヘキサメトキシメチル化メラミン（大日本インキ化学工業社製）

8） ポリウレタン樹脂：Ｄ６－４３９（大日本インキ化学工業社製、商品名）

9） ウレタン変性エポキシ樹脂：Ｄ－１３６２（ＡＣＲ社製、商品名）

10） ジグリシジルエステル：ＩＰＵ－２２Ｇ（岡村製油社製、商品名）

11） ポリフッ化ビニリデン－１：ＫＦポリマー、タイプＨ（呉羽化学工業社製、商品名）

12） ポリフッ化ビニリデン－２：パラプレンＰ２７ＭＲＮＡＴ（日本エラストラン社製、商品名）

13） 硬化剤－３：ＴＸＡ５２５（富士化成工業社製、商品名）

14） ブレード本体：天然ゴム、スチレンブタジエンゴム（ＳＢＲ）、アクリロニトリルブタジエンゴム（ＮＢＲ）に加硫剤、加硫促進剤、加硫促進助剤、老化防止剤、加工助剤、カーボンブラック等の補強材、増量材等が配合され、ゴム硬度が 60 ° のゴム弾性体を用いた。

実施例１～実施例６

水酸基を有するフッ素系樹脂 100重量部をトルエン 200重量部、メチルエチルケトン 400重量部で希釈して、その溶液中に表１に示す配合割合の原料を混合し、さらに表１に示す配合割合の硬化剤を配合して表面被覆形成液を得た。

図２に示す形状のブレード本体６の両側面にスプレー法にて、上述の表面被覆形成液を塗布し、表１に示した条件で硬化させた。表面被覆層４が形成された後、ブレード先端面となる箇所７を切断することにより、ワイパーブレード１を得た。なお、ワイパーブレードの長さは 500㎜であり、ブレード本体の材質は塩素化処理を施した天然ゴムまたはスチレンブタジエンゴム（ＳＢＲ）であり、表面被覆層の層厚は 8～15μm であった。

また、特性評価用試験片として、同様に塩素化処理を施した 150㎜（縦）× 150㎜（横）×2㎜ （厚さ）の大きさの天然ゴムまたはスチレンブタジエ

ンゴム（ＳＢＲ）シートに上述と同様の方法で表面被覆層を形成した。

得られたワイパーブレードおよび試験片を以下に示す方法で評価した。評価結果を表２に示す。

１）エッジオンディスク摺動試験

150mm（縦）× 150mm（横）×2mm （厚さ）のシートを 10mm （縦）× 20mm （横）×2mm （厚さ）の大きさに切断して、図３に示す方法で摺動試験を行った。図３は、ガラス面に対する試験片の摩擦係数と摩耗量を測定するための概要図を示す。

切断された試験片８を 10mm （縦）× 10mm （横）の大きさの治具９に固定し、ガラス面１０に対して 30 ° の傾きを持たせて、試験片８のエッジ部とガラス面そのもの、および撥水処理を施したガラス面との間で、回転数 60 rpm 、荷重 20gの条件でテストを行い摩擦係数と摩耗量を測定した。なお、撥水処理は、市販のシリコーン系撥水剤（スーパーレインX）を塗布することにより行った。

２）ワイパーブレード試験

図１に断面形状を示す長さ 500mmのワイパーブレードを用いて、ガラス表面そのものと、市販のシリコーン系撥水剤（スーパーレインX）を塗布したガラス表面に対して、以下の試験を行った。

（イ）拭き試験（ガラス表面そのもののみを対象）

散水時の拭き残し量を目視により、表３に示す評価基準に基づき評価する。

（ロ）ビビリ試験

初期性能……散水時のビビリ度合いを目視により、表４に示す評価基準に基づき評価する。

経時性能……散水したまま作動させ、表４に示す評価基準点が 3点を切るまでの時間を測定する。なお、経時性能は撥水処理を施したガラス表面のみを対象とする。

（ハ）摩耗試験

散水と止水とを一定時間で繰り返し、この条件下で規定回数作動させた後のエッジ部摩耗量を測定する。

（ニ）負荷試験

散水状態から止水しガラスが乾燥するまでの間で、作動しているワイパーシステムにかかる負荷の最大量を測定する。

（ホ）撥水処理膜の剥離試験

散水させた状態で作動させ、反転部分の撥水処理膜が剥離し始めるまでの時間を測定する。なお、剥離試験は撥水処理を施したガラス表面のみを対象とする。

比較例１

表面被覆層が形成されていない実施例１に用いた天然ゴム製ワイパーブレードおよび特性評価用試験片を用いて実施例１と同様に評価した。評価結果を表２に示す。

比較例２および比較例３

水酸基を有するフッ素系樹脂 100重量部をトルエン 200重量部、メチルエチルケトン 400重量部で希釈して、その溶液中にＰＴＦＥおよび有機ケイ素系弾性体を除いて、表１に示す配合割合の固体潤滑材および硬化剤を配合して表面被覆形成液を得た。この表面被覆形成液を用いて、実施例１と同一の条件方法で、 8～15μm の層厚の表面被覆層を有するワイパーブレードおよび試験片を得た。

得られたワイパーブレードおよび試験片を実施例１と同様に評価した。評価結果を表２に示す。

比較例４

ポリウレタン樹脂 100重量部をメチルエチルケトン 350重量部で希釈して、その溶液中に表１に示す配合割合の原料を混合し、さらに表１に示す配合割合の硬化剤を配合して表面被覆形成液を得た。この表面被覆形成液を用いて、硬化条件を表１に示す条件とする以外は実施例１と同一の条件方法で、 8～15μm の層厚の表面被覆層を有するワイパーブレードおよび試験片を得た。

得られたワイパーブレードおよび試験片を実施例１と同様に評価した。評価結果を表２に示す。

比較例５

ウレタン変性エポキシ樹脂とジグリシジルエステルとを重量比で６：４の割合で混合した樹脂 100重量部をメチルエチルケトン 500重量部で希釈して、その溶液中に表１に示す配合割合の原料を混合し、さらに表１に示す配合割合の硬化剤を配合して表面被覆形成液を得た。この表面被覆形成液を用いて、硬化条件を表１に示す条件とする以外は実施例１と同一の条件方法で、８～15μm の層厚の表面被覆層を有するワイパーブレードおよび試験片を得た。

得られたワイパーブレードおよび試験片を実施例１と同様に評価した。評価結果を表２に示す。

比較例６

ポリフッ化ビニリデン－１とポリフッ化ビニリデン－２とを容量比で 83：17 の割合で混合物 120容量部をジメチルホルムアミド 180容量部で希釈して、その溶液中に表１に示す配合割合の原料を配合して表面被覆形成液を得た。この表面被覆形成液を用いて、硬化条件を表１に示す条件とする以外は実施例１と同一の条件方法で、８～15μm の層厚の表面被覆層を有するワイパーブレードおよび試験片を得た。

得られたワイパーブレードおよび試験片を実施例１と同様に評価した。評価結果を表２に示す。

比較例７

水酸基を有するフッ素系樹脂 100重量部をトルエン 200重量部、メチルエチルケトン 400重量部で希釈して、その溶液中に表１に示す配合割合の原料を混合し、さらに表１に示す配合割合の硬化剤を配合して表面被覆形成液を得た。この表面被覆形成液を用いて、ゴム弾性体としてアクリロニトリルブタジエンゴム（ＮＢＲ）を用い、硬化条件を表１に示す条件とする以外は実施例１と同一の条件方法で、８～15μm の層厚の表面被覆層を有するワイパーブレードおよび試験片を得た。

得られたワイパーブレードおよび試験片を実施例１と同様に評価した。評価結果を表２に示す。

表1

例 / 配合 *1	実施例 1	2	3	4	5	6	比較例 1*2	2	3	4	5	6	7
表面被覆層材料													
水酸基を有するフッ素系樹脂	100	100	100	100	100	100	—	100	100	—	—	—	100
ＰＴＦＥ	120	120	130	120	130	—	—	—	—	130	130	—	140
有機ケイ素系弾性体	38	38	—	38	40	40	—	—	—	20	20	—	10
グラファイト	38	38	50	38	—	30	—	50	—	3.5	3.5	15	3.5
二硫化モリブデン	—	—	—		30	80	—	—	50	—	—	—	—
硬化剤－１	12	—	10	12	15	12	—	10	10	60	—	—	12
硬化剤－２	—	25	—	—	—	—	—	—	—	—	—	—	—
ポリウレタン樹脂	—	—	—	—	—	—	—	—	—	100	—	—	—
ウレタン変性エポキシ樹脂	—	—	—	—	—	—	—	—	—	—	60	—	—
ジグリシジルエステル	—	—	—	—	—	—	—	—	—	—	40	—	—
ポリフッ化ビニリデン－１	—	—	—	—	—	—	—	—	—	—	—	83	—
ポリフッ化ビニリデン－２	—	—	—	—	—	—	—	—	—	—	—	17	—
硬化剤－３	—	—	—	—	—	—	—	—	—	—	60	—	—
ブレード本体材料													
天然ゴム（塩素化処理有り）	○	○	○	—	○	○	○	○	○	○	○	○	—
ＳＢＲ（塩素化処理有り）	—	—	—	○	—	—	—	—	—	—	—	—	NBR
硬化条件													
硬化温度、℃	80	70	80	80	80	80	—	80	80	80	80	100	80
硬化時間、分	15	300	15	15	15	15	—	15	15	30	30	30	30

注）*1）表面被覆層配合の単位は重量部、ただし比較例６は容量部である。
*2）比較例１は表面被覆層がない。

表2

項目＼例	実施例 1	2	3	4	5	6	比較例 1	2	3	4	5	6	7
エッジオンディスク摺動試験													
通常ガラス面													
摩擦係数	0.19	0.23	0.25	0.19	0.23	0.25	0.49	0.38	0.39	0.27	0.28	0.41	0.26
摩耗量、mg	1.2	1.3	1.7	1.5	1.8	1.9	6.2	4.7	4.5	2.2	2.2	3.7	2.4
撥水処理ガラス面													
摩擦係数	0.11	0.14	0.17	0.11	0.12	0.18	*1	0.37	0.35	0.25	0.25	0.39	0.23
摩耗量、mg	0.4	0.5	0.9	0.4	0.4	0.8	9.4*2	3.9	4.2	1.4	1.9	4.0	1.3
ワイパーブレード試験													
通常ガラス面													
拭き評価、点	4.0	4.0	4.0	4.5	4.0	4.0	4.0	3.0	3.0	4.0	4.0	3.0	4.0
ビビリ評価、点	4.0	4.0	4.0	4.5	4.0	4.0	4.0	3.0	3.0	4.0	3.0	3.0	4.0
摩耗量、mg	0.48	0.44	0.54	0.50	0.50	0.54	0.54	0.51	0.52	0.45	0.45	0.51	0.45
最大負荷、kg	0.56	0.51	0.61	0.52	0.69	0.69	1.01	0.92	0.99	0.88	0.89	0.91	0.87
撥水処理ガラス面													
ビビリ評価、点	3.5	3.5	3.5	4.0	3.5	3.5	3.5	3.0	3.0	3.5	3.0	3.0	3.5
ビビリ合格点維持時間、H	>8.0	>8.0	>8.0	>8.0	>8.0	>8.0	3.0	4.5	4.2	5.2	5.5	5.6	5.7
摩耗量、mg	0.48	0.52	1.24	0.60	0.77	1.14	3.18	2.74	2.94	1.96	2.11	2.10	1.90
最大負荷、kg	0.56	0.50	0.62	0.51	0.60	0.63	0.65	0.65	0.67	0.64	0.65	0.64	0.64
撥水処理膜剥離開始時間、H	2.0	2.2	2.0	2.4	2.0	2.0	1.0	0.8	0.7	1.1	1.1	1.2	1.1

注） *1） １５時間で測定不可となる。
*2） １５時間での摩耗量。

表3

評価基準点	拭き評価基準内容
5	拭き残しが無い
4	ライン状の拭き残しが散在する
3	中央部以外に薄い拭き残しが発生する
2	数箇所に明瞭な拭き残しが発生する
1	全面に拭き残しが発生する

表4

評価基準点	ビビリ評価基準内容
5	目に見える振動が無い
4	反転時のみに振動して消える
3	全面に小刻みに振動が見える
2	ブレードが跳び、拭き筋が残る
1	ブレードが完全に跳び、大きく跳躍する

表2に示すように、実施例1～実施例6は、比較例1～比較例7に比較して、エッジオンディスク摺動試験およびワイパーブレード試験において優れた性能を有している。

実施例7

実施例1において、図1に示す形状のワイパーブレード1を用いて摺接部2およびブレード先端面5に表面被覆層4を形成する以外は、同一の条件方法でワイパーブレードを得た。実施例7により得られるワイパーブレードの断面図を図4に示す。得られたワイパーブレードを実施例1と同一の条件方法で評価したところ、通常ガラス面に対する最大負荷特性が 0.69 kgであり、撥水処理ガラス面に対しては、ビビリ合格点維持時間が 8時間以上であり、摩耗量が 1.02mg 、撥水処理膜剥離開始時間が 2.0時間であった。

以上説明したように、実施例1～実施例7は、通常ガラス面に対して優れた最大負荷特性を示し、撥水処理ガラス面に対しては、ビビリ合格点維持時

間、摩耗量および撥水処理膜剥離開始時間特性において比較例１～比較例７に比較して優れていた。

産業上の利用可能性

以上説明したように、本発明に係るワイパーブレードは、拭き取り性能、ビビリ性能、耐久性に優れている。

また、水酸基含有フッ素系樹脂と、硬化剤としてイソシアネート化合物およびメラミン樹脂類の少なくとも一つを用い、さらに四フッ化エチレン樹脂、有機ケイ素系弾性体を含有する表面被覆層とすることにより、上述の特性がさらに向上し、とくに撥水処理を施した透光体表面に対する拭き取り性能、ビビリ性能、耐久性に優れたワイパーブレードを得ることができる。

本発明に係るワイパーブレードの製造方法は、表面被覆層を形成後切断するので、ブレード本体の両側面のみに表面被覆層を有しブレード先端面に表面被覆層がなく、かつエッヂ精度を高めたワイパーブレードを容易に得ることができる。

請求の範囲

1. ゴム弾性体よりなるブレード本体と、この本体表面に、分子内に反応性基を有するフッ素系樹脂と、前記反応性基と反応性を有する硬化剤とからなる表面被覆層を有するワイパーブレードであって、

前記表面被覆層は、前記ブレード本体の両側面のみに形成されてなることを特徴とするワイパーブレード。

2. 前記表面被覆層は、前記分子内に反応性基を有するフッ素系樹脂 100 重量部に対して固体潤滑材 10 ～110 重量部配合してなることを特徴とする請求項１記載のワイパーブレード。

3. ゴム弾性体よりなるブレード本体と、この本体表面に、分子内に反応性基を有するフッ素系樹脂と、前記反応性基と反応性を有する硬化剤とからなる表面被覆層を有するワイパーブレードであって、

前記表面被覆層は、前記分子内に反応性基を有するフッ素系樹脂 100重量部に対して固体潤滑材 10 ～110 重量部配合してなることを特徴とするワイパーブレード。

4. 前記反応性基が水酸基であり、前記硬化剤が、イソシアネート化合物およびメラミン樹脂類の少なくとも一つであることを特徴とする請求項１ないし請求項３のいずれか１項記載のワイパーブレード。

5. 前記表面被覆層が、四フッ化エチレン樹脂を含有してなることを特徴とする請求項１ないし請求項４のいずれか１項記載のワイパーブレード。

6. 前記表面被覆層が、有機ケイ素系弾性体を含有してなることを特徴とする請求項１ないし請求項４のいずれか１項記載のワイパーブレード。

7. 前記固体潤滑材が、グラファイトであることを特徴とする請求項２または請求項３記載のワイパーブレード。

* C L M S *

8. 前記表面被覆層が、少なくとも 1層の撥水処理を施した透光体表面と摺接することを特徴とする請求項１ないし請求項７のいずれか１項記載のワイパーブレード。

9. ワイパーブレードの幅方向に複数個連続してブレード本体を形成する工程と、

このブレード本体の表面に表面被覆層を形成する工程と、

前記表面被覆層が形成されたブレード本体をワイパーブレードの長さ方向に平行に切断する工程とを有することを特徴とする請求項１記載のワイパーブレードの製造方法。

* C L M S *

図 1

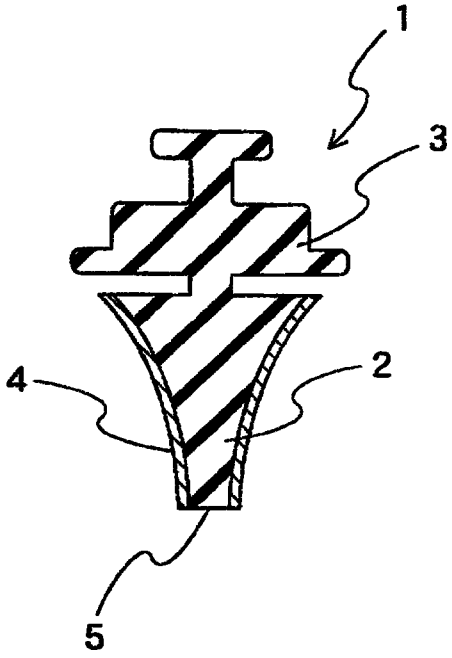

図 2 A

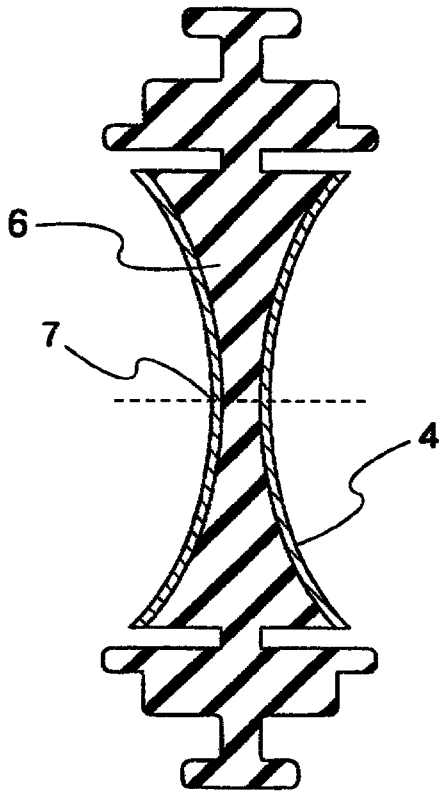

図 2 B

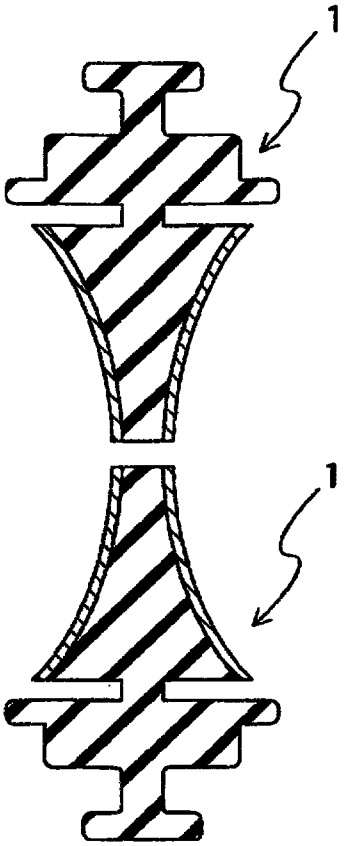

図 3

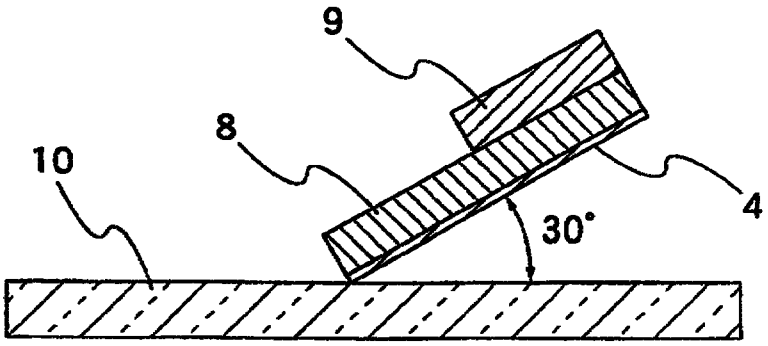

図 4

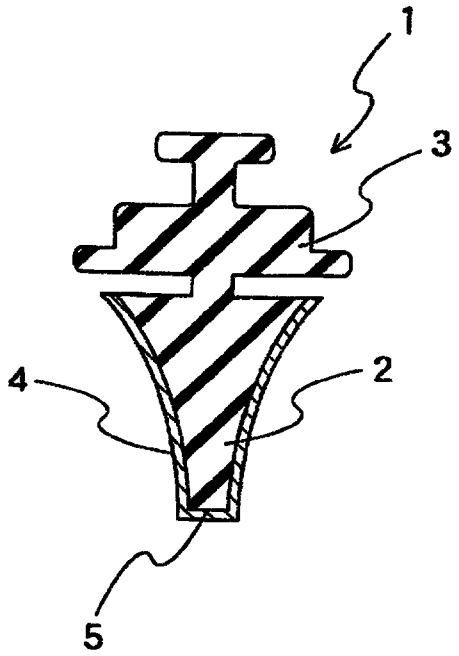

DESCRIPTION

Wiper Blade and Method of Manufacturing

Technical field

In general, the present invention relates to a wiper blade and a method of manufacturing the wiper blade and more particularly, to a wiper blade superior in wiping the surface of a transparent material, for example, glass treated with water-repellent agent and a method of manufacturing the wiper blade.

Background of Art

The wiper blade for a vehicle, train, and the like swings in sliding contact with the surface of a windowpane thereof to allow a driver to secure the visual field. Therefore, it is necessary for the wiper blade to have a high degree of flexibility and restoring property; a high degree of durability such as water-proofness, weatherability, and wear resistance; not to judder on the windowpane; and have a high wiping performance.

In order to comply with such demands, a rubber material which is halogenated to harden the surface thereof so that the wiper blade slides easily on the windowpane and has a high degree of wear resistance is widely used as wiper blades. In addition, the following wiper blades are known: Binder mixed

with molybdenum disulfide or graphite is applied to the surface of wiper blade, as disclosed in Laid-Open Japanese Patent Publication No. 55-113545; and a film made of polyvinylidene fluoride, polyvinyl chloride or polyurethane is formed on the surface of wiper blade, as disclosed in Laid-Open Japanese Patent Publication No. 5-97015.

Further, there is disclosed, in Laid-Open Japanese Patent Publication No. 8-48800, a resinous coating material made of rubber or plastic containing solid lubricant as well as silicone rubber and having a low coefficient of friction and a high degree of resistance to wear.

However, the wiper blade comprising the halogenated rubber does not slide on a glass surface sufficiently. In particular, the wiper blade does not slide well on a glass surface to which wax or the like has attached and further, judders when it slides thereon in contact therewith. Thus, the wiper blade has an unfavorable wiping performance. If the rubber is halogenated in a high extent, the surface of the wiper blade is likely to be cracked and marks are left on the glass surface by the sliding contact of the wiper blade with the glass surface.

The wiper blade coated with the binder disclosed in Laid-Open Japanese Patent Publication No. 55-113545 does not judder when it slides on the glass surface in contact therewith and has a superior wiping performance only in a short period of

time after the coating is applied to the surface of the wiper blade. But with a long-time use, the coating peels off from the surface of the wiper blade and thus the wiper blade judders when it slides on the glass surface in contact therewith. Thus, the wiper blade deteriorates in its wiping performance with age.

Each of the wiper blades coated with the film disclosed in Laid-Open Japanese Patent Publication Nos. 5-97015 and 8-48800 has a favorable wiping performance on a clean glass surface but judders on a glass surface to which wax, dust or sand has attached and a water-repellent glass surface, thus having an unfavorable wiping performance.

As described above, the conventional wiper blade is inferior in durability and wiping performance and in particular, incapable of wiping the water-repellent glass surface favorably.

The present invention has been made to solve the above-described problems. It is accordingly an object of the present invention to provide a wiper blade which has a high degree of flexibility and restoring property; a high degree of durability such as water-proofness, weatherability, and wear resistance; and judders in a slight extent when it slides on a glass surface in contact therewith even though wax, dust or sand has attached to the glass surface and a water-repellent glass surface; a high wiping performance; and

THIS SHEET HAS BEEN REPLACED

maintains its wiping performance for a long time.

It is another object of the present invention to provide a method of manufacturing the wiper blade.

Disclosure of Invention

A wiper blade of the present invention comprises a body made of an elastomer and a surface coating layer on the body. The coating layer comprises a fluorine-contained resin having reactive groups in a molecule thereof and a hardening agent having reactivity with the reactive groups. And the surface coating layer is formed on only both side surfaces of the body.

The surface coating layer is a mixture of 100 parts by weight of the fluorine-contained resin having the reactive group in a molecule thereof and 10 - 110 parts by weight of a solid lubricant.

Another wiper blade of the present invention comprises a body made of an elastomer and a surface coating layer on the body. The coating layer comprises a fluorine-contained resin having reactive groups in a molecule thereof and a hardening agent having reactivity with the reactive groups. The surface coating layer comprises a mixture of 100 parts by weight of the fluorine-contained resin having the reactive group in the molecule thereof and 10 - 110 parts by weight of a solid lubricant.

This Sheet Has Been Replaced



In the above described wiper blade, the reactive group of the fluorine-contained resin is hydroxyl group, and the hardening agent is an isocyanate compound and/or melamine resin.

The surface coating layer contains polytetrafluoroethylene resin and/or an organosilicone elastomer. The solid lubricant consists essentially of graphite.

The surface coating layer slidably contacts a surface of a transparent material having at least one layer thereof water-repellently treated.

A method of manufacturing the wiper blade of the present invention comprises the steps of forming a plurality of blade bodies continuously in a widthwise direction of the wiper blade, forming a surface coating layer on a surface of each blade body and cutting each blade body in parallel with a lengthwise direction of the wiper blade.

The manufacturing method allows the wiper blade to have the surface coating layer on only both side surfaces of the blade body. The longer side of the wiper blade having a predetermined thickness is defined as the lengthwise direction, and the shorter side thereof is defined as the widthwise direction.

The manufacturing method enhances the edge accuracy of the wiper blade and allows the surface coating layer to be

THIS SHEET HAS BEEN REPLACED

This Sheet Has Been Replaced



formed on only both side surfaces of the blade body.

"Both side surfaces of the blade body" means surfaces which slidably contact the surface of glass during wiping action. "Wiper blade has the surface coating layer on only both side surfaces of the blade body" means that the surface coating layer is formed on both side surfaces which slidably contact the surface of glass and not on the top surface of the wiper blade.

In addition to the above-described construction, the surface coating layer comprises the fluorine-contained resin having the hydroxyl groups in the molecules thereof and the hardening agent having reactivity with the hydroxyl groups. The surface coating layer firmly adheres to the surface of the blade body made of the elastomer, thus improving the durability of the blade outstandingly. The surface coating layer is a mixture of 100 parts by weight of the fluorine-contained resin and 10 - 110 parts by weight of the solid lubricant. The surface coating layer having this composition allows the wiper blade to have a high degree of durability and wipes surface of a transparent material, for example, glass having at least one layer treated with water-repellent agent. Further, because the surface coating layer contains the polytetrafluoroethylene resin or the organosilicone elastomer, the surface coating layer has an improved wear resistance and sliding performance.

This Sheet Has Been Replaced



THIS SHEET HAS BEEN REPLACED

Because the surface coating layer is a mixture of 100 parts by weight of the fluorine-contained resin and 10 - 110 parts by weight of the solid lubricant, the surface coating layer wipes the water-repellent glass surface and is durable even though the surface coating layer is formed on the top surface of the wiper blade.

Further, when graphite is used as the solid lubricant, the above-described characteristics can be enhanced.

Brief Description of the Drawings

Fig. 1 is a sectional view showing a wiper blade;

Fig. 2A and Fig. 2B are a view showing an example of a method of manufacturing the wiper blade; and

Fig. 3 is a view showing a method of measuring a friction coefficient and an abrasion amount.

Fig.4 is a sectional view showing a wiper blade obtained with embodiment 7.

Best Mode for Carrying Out the Invention

The elastomer of the present invention forming the body of the wiper blade is not limited to a specific one, but those displaying rubber elasticity when the wiper blade is operated can be used. For example, natural rubber (NR), isoprene rubber (IR), styrene-butadiene rubber (SBR), butadiene rubber (BR), chloroprene rubber (CR), acrylonitrile-butadiene rubber

THIS SHEET HAS BEEN REPLACED

This Sheet Has Been Replaced

(NBR), ethylene propylene rubber can be preferably used. The natural rubber (NR) and the styrene-butadiene rubber (SBR) can be preferably used as the elastomers which preferably wipe a glass surface treated with water-repellent agent, without the wiper blade vibrating in sliding contact therewith.

It is preferable that the elastomers have a rubber hardness in a range of 50° - 80° measured in accordance with JIS K 6301 to maintain the flexibility and restoring performance of the wiper blade. In order to improve the weatherability of the elastomeric materials, ozone-absorbing agent, age resistance agent, and wax can be added to the elastomers.

In order to improve an adhesion of the surface coating layer to the elastomer, it is preferable that the surface of the elastomer is halogenated, subjected to plasma treatment at low temperatures, corona discharge treatment, and ultraviolet ray irradiation. Halogenation is most favorable to improve the adhesion of the surface coating layer to the elastomer. As the halogenation, chlorination, bromization, iodization or fluorination is used.

The fluorine-contained resin having a reactive group in molecules thereof and constituting the surface coating layer has the reactive group at side chains of the fluorine-contained resin or the terminals of molecular chains thereof. The reactive group includes hydroxyl group (-OH), isocyanate group (-NCO), carboxyl group (-COOH), -NHR group (R of NHR is

THIS SHEET HAS BEEN REPLACED

This Sheet Has Been Replaced

hydrogen, alkyl group or alkoxyl group), mercapto group (-SH), epoxy group, acetoxy group ($-COOCH_3$), and sulfonic group ($-SO_3H$. The fluorine-contained resin having the hydroxyl group (-OH) in the molecules thereof can be most favorably used. More specifically, the fluorine-contained resin which is a copolymer comprising the unit of fluoroolefin and the unit of vinyl ether and having the hydroxyl group (-OH) in the unit of the vinyl ether can be most favorably used.

It is possible to use the fluorine-contained resin having $-C_XF_{2X}-O-$ (x is integers of one to four) as the main structural unit thereof and having the above-described reactive group at side chain or the terminal of molecular chain of a polymer having an average molecular weight of about 1,000 - 10,000.

As the hardening agents which reacts with the fluorine-contained resin having the reactive group in the molecules thereof, it is possible to use those having a functional group which reacts with the reactive group of the fluorine-contained resin. In particular, when the reactive group consists of the hydroxyl group, hardening agents containing the isocyanate group (-NCO) and the -NHR group can be preferably used. These hardening agents can be used singly or as a mixture.

As the hardening agents having the isocyanate group (-NCO), polyisocyanates having two or more isocyanate groups connected with aliphatic group, alicyclic group or aromatic group can be preferably used. For example, hexamethylene

THIS SHEET HAS BEEN REP.

This Sheet Has Been Replaced

diisocyanate, phenylene diisocyanate, tolylene diisocyanate, diphenylmethane diisocyanate, naphthalene diisocyanate can be preferably used. These hardening agents can be used in the form of monomer, dimer or trimer. It is possible to use blocked isocyanates obtained by blocking active isocyanate group with a phenol-contained compound or caprolactam, or to use polyisocyanates which is the product of the reaction of polyols with the polyisocyanate and has the isocyanate group at the terminal of molecular chain thereof.

It is preferable to set the mixing ratio between the fluorine-contained resin having the hydroxyl group (-OH) and the hardening agent having the isocyanate group (-NCO) to 1 : 0.5 - 1.1 in equivalent ratio. In order to allow the surface coating layer to be flexible and the wiper blade to have an improved wiping performance, it is more preferable to set the mixing ratio between the fluorine-contained resin and the hardening agent to 1 : 0.6 - 1.

As the hardening agent having the -NHR group, melamine resin can be preferably used. For example, butylated methylol melamine and hexamethoxy methylated melamine are preferable.

It is preferable to mix the fluorine-contained resin having the hydroxyl group (-OH) and the hardening agent having the -NHR group with each other at a weight ratio of 6 - 9 : 1 - 4 to allow the wiper blade to have a favorable wiping performance.

THIS SHEET HAS BEEN REPLACED

This Sheet Has Been Replaced

The polytetrafluoroethylene resin (hereinafter referred to as PTFE) of the present invention means a polymer of tetrafluoroethylene. It is possible to use the PTFE obtained by any one of the following polymerization methods: block polymerization, solution polymerization, suspension polymerization, blow polymerization, and emulsion polymerization.

In addition, it is possible to use so-called reclaimed powdered PTFE which is obtained by molding virgin PTFE obtained by one of the above-described polymerization methods and then, sintering the molded PTFE and then, pulverizing the sintered PTFE; so-called powdered PTFE lubricating powder obtained by treating the virgin PTFE with gamma lay irradiation or the like; and finely powdered PTFE obtained by pulverizing the virgin PTFE.

Favorably, the average diameter of the PTFE is smaller than 30μm and more favorably, smaller than 15μm to allow the thickness of the surface coating layer and the surface roughness thereof to be uniform. It is preferable that the minimum diameter of the PTFE is greater than the diameter at which the PTFE powders agglomerate.

It is preferable to mix 70 - 150 parts by weight of the PTFE powders with 100 parts by weight of the fluorine-contained resin having the reactive groups in the molecules thereof. If the part by weight of the PTFE powders is less than 70, the surface coating layer has a poor lubricating

This Sheet Has Been Replaced



THIS SHEET HAS BEEN REPLACED

performance. If the part by weight of the PTFE powders is more than 150, the surface coating layer has a poor adhesiveness to the elastomer.

The organosilicone elastomer of the present invention contains organosiloxane bond at the main chains of the molecules thereof and displays rubber elasticity. For example, methyl silicone rubber, vinyl-methyl silicone rubber, phenyl-methyl silicone rubber, and fluorinated silicone rubber can be preferably used. Preferably, these rubbers are cured at 150° - 180°C by adding curing agent thereto and pulverized or cured rubbers are subjected to secondary curing at 190° - 220°C and then, pulverized.

It is preferable that the average diameter of the organosilicone elastomer is 1μm - 10μm. It is favorable to mix 10 - 50 parts by weight of the organosilicone elastomer with 100 parts by weight of the fluorine-contained resin having the reactive groups in the molecules thereof. It is more favorable to mix 30 - 50 parts by weight of the former with 100 parts by weight of the latter. If the average diameter of the organosilicone elastomer is greater than 10μm or if the mixing amount thereof is more than 50 parts by weight, the surface coating layer has a low strength and a deteriorated wear resistance. If the average diameter of the organosilicone elastomer is smaller than 1μm, the dispersibility thereof in the surface coating layer is

THIS SHEET HAS BEEN REPLACED

This Sheet Has Been Replaced

unfavorable and the sliding performance and wear resistance of the surface coating layer deteriorate. If the mixing amount of the organosilicone elastomer is smaller than 10 parts by weight, the surface coating layer has deteriorated sliding performance and wear resistance.

It is possible to mix the powdered solid lubricant with the fluorine-contained resin to improve the sliding performance and wear resistance of the surface coating layer. The solid lubricant includes graphite, molybdenum disulfide (MoS_2), carbon, boron nitride, graphite fluoride, and tungsten disulfide (WS_2). These solid lubricants can be used singly or as a mixture.

The graphite and the molybdenum disulfide are most favorable of the above-described solid lubricants. Both artificial graphite and natural graphite can be used. It is preferable that the average diameter of the solid lubricant is 0.5μm - 12μm. If the average diameter of the solid lubricant is greater than 12μm, the surface coating layer has a degraded wear resistance. If the average diameter of the solid lubricant is smaller than 0.5μm, it has a degraded dispersibility in the surface coating layer.

By mixing an appropriate amount of the solid lubricant with the fluorine-contained resin, the sliding performance and wear resistance of the surface coating layer can be improved; the judder of the wiper blade can be suppressed; and the

THIS SHEET HAS BEEN REPLACED

This Sheet Has Been Replaced

wiping performance thereof can be improved.

It is favorable to mix 10 - 110 parts by weight of the solid lubricant with 100 parts by weight of the fluorine-contained resin having the reactive groups in the molecules thereof. It is favorable to mix 25 - 65 parts by weight of the graphite with 100 parts by weight of the fluorine-contained resin to suppress judder of the wiper blade and improve the wiping performance of the surface coating layer. If the mixing amount of the solid lubricant is more than 110 parts by weight, the surface coating layer has a deteriorated wear resistance. If the mixing amount of the solid lubricant is smaller than 10 parts by weight, the surface coating layer has deteriorated sliding performance and wear resistance, and in addition, is liable to judder when the wiper blade slides in contact with the surface of a transparent material, especially the water-repellent surface of a transparent material, for example, a glass surface.

Examining the correlation between the judder and the state of the surface coating layer, the surface coating layer of the present invention which showed a superior characteristic in a wiper blade test which will be described later had stripes thereon in the lengthwise direction of the wiper blade.

The transparent material of the present invention means a transparent substance which allows light to pass there-

THIS SHEET HAS BEEN REPLACED

This Sheet Has Been Replaced



through. The transparent substance includes glasses such as plate glass, reinforced glass, laminated glass; transparent ceramics such as transparent alumina; transparent plastics such as acrylic resin.

To perform a water-repellent treatment is to treat a glass surface or the like with a water-repellent agent containing silicone or fluorine. The water-repellent agent containing silicone is classified into two types: One type of the water-repellent agent is coated on the surface of the transparent material such as a glass surface and the other type is window-washing liquid. As examples of the former, "Super rain X" (trade name, manufactured by Kinnodo Co., Ltd.), "Super rain X plus" (trade name, manufactured by Kinnodo Co., Ltd.), "Soft 99 galaco" (trade name, manufactured by Soft 99 Corp.), and "Nuri Nuri Galaco" (trade name, manufactured by Soft 99 Corp.) are commercially available. As examples of the latter type, "Super Washer Z" (trade name, manufactured by Augu Co., Ltd.) and "Galaco washer liquid" (trade name, manufactured by Soft 99 Corp.) are commercially available.

As examples of the water-repellent agent containing fluorine, "Super galaco" (trade name, manufactured by Soft 99 Corp.) and "Nissan Water-repellent Agent System" (manufactured by Nissan Motor Co., Ltd.). These water-repellent agents are coated on a glass surface.

A glass surface having even one layer treated with the water-repellent agent causes the wiper blade to judder thereon.

The surface coating layer of the present invention is capable of containing various substances, provided that they do not deteriorate the effect of the present invention.

Such mixing substances include inorganic fillers such as mica, talc, kaolin, calcium carbonate, and calcium sulfate; resins such as polyamide resin, polyimide resin, polyamide-imide resin, polyether imide resin, polyphenylene sulfide resin, polyolefin resins such as polyethylene and polypropylene, polyacetal resin, aromatic polyester resin, aromatic polyether ketone resin, aromatic polyether ether ketone resin, and polyurethane resin; rubbers such as fluorine rubber, urethane rubber, polyethylene rubber, polybutadiene rubber, and thermoplastic elastomer; fibers such as potassium titanate fiber, glass fiber, carbon fiber, aluminum borate whisker fiber, wollastnite, and aramid fiber.

The liquid for forming the surface coating layer is obtained by dissolving or dispersing, in an organic solvent, a mixture of the fluorine-contained resin having the reactive groups in the molecules thereof, the hardening agent, polytetrafluoroethylene resin, an organosilicone elastomer, and the solid lubricant. The above substances are mixed with each other in the following methods: According to a first

THIS SHEET HAS BEEN REPLACED

This Sheet Has Been Replaced

mixing method, the fluorine-contained resin is mixed with the PTFE, the organosilicone elastomer, and various components, and then, the hardening agent is added to the mixture; according to a second mixing method, after the PTFE, the organosilicone elastomer, and various components are mixed with each other to form a mixture by a mixer, the fluorine-contained resin is mixed with the mixture, and then, the hardening agent is added to the mixture; according to a third mixing method, all the components are mixed with each other all together.

The wiper blade of the present invention will be described below with reference to Fig. 1 showing it in section.

The wiper blade 1 comprises a sliding-contact part 2 slidably contacting a glass surface; a fixing part 3 fixed to the fixing part of a wiper; a surface coating layer 4 formed on the sliding-contact part 2 positioned at both side surfaces of the blade body. The surface coating layer 4 is not formed on the top surface 5 of the wiper blade 1. The wiper blade 1 having this shape has a favorable wiping performance without vibrating on a glass surface treated with the water-repellent agent. This superior performance of the wiper blade can be enhanced by forming, on the wiper blade 1, a surface coating layer of a mixture of 100 parts by weight of the fluorine-contained resin and 10 - 110 parts by weight of the solid

THIS SHEET HAS BEEN REPLACED

This Sheet Has Been Replaced

lubricant.

The method, of the present invention, for forming the surface coating layer on the surface of the blade body is not limited to a specified one, provided that it allows the surface coating layer to be formed thereon smoothly and uniformly. For example, spray method, dipping method or brush painting method can be adopted. The above-described mixture for forming the surface coating layer can be obtained by dissolving or dispersing the above-described components in the organic solvent consisting of aromatic solvents such as toluene, solvent naphtha; ketones such as acetone, methyl ethyl ketone; esters such as methyl acetate, ethyl acetate, isoamyl acetate, butyl acetate; and ethers such as diethyl ether, dioxane.

The surface coating layer applied to the surface of the blade body is heat-treated and cured at 30 - 100°C for 5 minutes - 48 hours. Preferably, as the heat-treating condition, the temperature is set to 70°C - 90°C and the period of time is set to 5 - 15 minutes to improve productivity.

The method of forming the surface coating layer on both side surfaces of the blade body is described with reference to Fig. 2A and Fig. 2B showing an example of a method of manufacturing the wiper blade of the present invention. The surface coating layer 4 is formed on both side surfaces of

each of two unseparated blade bodies 6, as shown in Fig. 2A. Then, a portion 7 is cut to form the top surface of the blade. In this manner, the two wiper blades 1, 1 having no surface coating layer formed on the top end of each blade is obtained, as shown in Fig. 2B. This method is particularly favorable to enhance the accuracy of the edge (top end) of the wiper blade.

Methods can be used, provided that they do not form the surface coating layer on the top surface 5 of the blade. For example, it is possible to adopt a method of forming a coating layer on the entire surface of the blade and cutting the top end of the blade.

Favorably, the thickness of the surface coating layer is 2μm - 50μm and more favorably, 3μm - 20μm. The surface coating layer having a thickness in the above range has superior following ability with the blade body made of an elastomer and durablity. The surface coating layer having a thickness smaller than 2μm is inferior in its durability. The surface coating layer having a thickness greater than 50μm is inferior in its initial wiping performance.

Materials which are used in embodiments and comparative examples are shown below.

1) Fluorine-contained resin having hydroxyl group (-OH): Fluonate K702 (trade name, manufactured by Dainippon Ink & Chemicals Inc.)

THIS SHEET HAS BEEN REPLACED

This Sheet Has Been Replaced

2) PTFE: KTL-8F (trade name, manufactured by Kitamura Co., Ltd.)

3) Organosilicone elastomer: powder obtained by pulverizing cured material of EL5504 (trade name, Wacker Chemicals East Asia Ltd.)

4) Graphite: graphite CSSP (trade name, Nippon Graphite Industries, Ltd.)

5) Molybdenum disulfide (MoS_2): Molycoat micro size (trade name, Dow corning Corp.)

6) Isocyanate compound (hardening agent - 1): Verknock DN-990S (trade name, manufactured by Dainippon Ink & Chemicals Inc.)

7) Melamine resin (hardening agent - 2): hexamethoxyl methylated melamine (manufactured by Dainippon Ink & Chemicals Inc.)

8) Polyurethane resin: D6-439 (trade name, manufactured by Dainippon Ink & Chemicals Inc.)

9) Urethane modified epoxy resin: D-1362 (trade name, manufactured by ACR Corp.)

10) Diglycidyl ester: IPU - 22G (trade name, Okamura Seiyu Co., Ltd.)

11) Polyvinylidene fluoride-1: KF polymer, type H (trade name, manufactured by Kureha Chemical Industry Co. Ltd.)

12) Polyvinylidene fluoride-2: Paraprene P27MRNAT (trade name, manufactured by Nippon Elastoran Co., Ltd.)

13) Hardening agent-3: TXA525 (trade name, manufactured by

Fuji Kasei Kogyo Co., Ltd.)

14) Blade body: curing agent, curing accelerator, auxiliaries for curing accelerator, age resistor, processing aid, reinforcing agent such as carbon black, filler agent and the like are added to a natural rubber (NR), styrene-butadiene rubber (SBR) or acrylonitrile-butadiene rubber (NBR) to form an elastomer having a rubber hardness of 60° after curing.

Embodiment 1 - Embodiment 6

100 parts by weight of fluorine-contained resin having hydroxyl group was diluted with 200 parts by weight of toluene and 400 parts by weight of methyl ethyl ketone. Then, materials each having the proportion shown in table 1 were added to the solution. Then, hardening agents each having the proportion shown in table 1 were added to the solution to obtain a surface layer-forming liquid.

The surface layer-forming liquid was applied to both side surfaces of a blade body 6 having a shape shown in Fig. 2A by spray method and then hardened in the condition shown in table 1. After the surface coating layer 4 was formed, the portion 7 was cut to form the top surface of the blade to obtain the wiper blade 1. The wiper blade 1 had a length of 500mm. The blade body was made of chlorinated natural rubber (NR) or chlorinated styrene-butadiene rubber (SBR). The thickness of the surface coating layer was 8μm - 15μm.

As the specimen for evaluating the characteristic of the

This Sheet Has Been Replaced

THIS SHEET HAS BEEN REPLACED

wiper blade, surface coating layers were formed on sheets made of chlorinated natural rubber (NR) or chlorinated styrene-butadiene rubber (SBR) by a method similar to the above-described method. Each specimen had a size of 150mm (length) x 150mm (width) x 2mm (thickness).

Wiper blades and specimens thus obtained were evaluated by a method described below. Evaluated results are shown in table 2.

1) Edge-on-disc sliding-contact test

A sheet of 150mm (length) x 150mm (width) x 2mm (thickness) was cut to form specimens 8 each having a size of 10mm (length) x 20mm (width) x 2mm (thickness). Sliding-contact test was conducted on the specimens by a method as shown in Fig. 3 showing the outline of the method of measuring the coefficient of friction between each specimen and a glass surface and the amount of abrasion thereof.

Each of the specimens 8 was fixed to a jig 9 having a dimension of 10mm (length) x 10mm (width) by forming an angle of 30° between a glass surface 10 and each specimen 8. Sliding-contact test was conducted to examine the coefficient of friction between the edge of each specimen 8 and the glass surface 10 as well as a glass surface treated with a water-repellent agent and examine the amount of abrasion of the edge of each specimen 8. The test condition was that the glass surface 10 rotated at 60 rpm and a load of 20g was applied to

each specimen 8.

2) Wiper blade test

The following tests were conducted on a glass surface and a glass surface treated with silicone-contained water-repellent agent (Super rain X) commercially available, using the wiper blade (shown in Fig. 1) having a length of 500mm.

2)-1 Wiping test (to the glass surface alone)

After water was sprinkled over the glass surface, the amount of water left on the glass surface not treated with the Super rain X was visually evaluated, based on the standard shown in table 3.

2)-2 Judder test

* Initial performance ... After water was sprinkled over the glass surface, the degree of judder of the wiper blade was visually evaluated, based on the standard shown in table 4.

* Performance of wiper blade with age ... Water was sprinkled over the glass surface while the wiper blade was operated to measure the period of time until the evaluation standard point exceeds point 3 in table 4. The test to examine the performance of the wiper blade with age was conducted on the glass surface treated with the water-repellent agent.

2)-3 Abrasion test ... The amount of abrasion of the wiper blade at its edge was measured after the wiper blade was operated at a specified number of times, with water kept to be sprinkled over the glass surface intermittently every

THIS SHEET HAS BEEN REPLACED

This Sheet Has Been Replaced



certain period of time.

2)-4 Load test ... This test is to measure the maximum amount of load applied to the wiper system operating between the time when water was sprinkled over the glass surface and the time when the glass surface became dry.

2)-5 Peel test of water-repellent surface-treating film ... This test is to measure the period of time between the time when the wiper blade started to operate and the time when the water-repellent surface-treating film started to peel off from the blade body while water was kept to be sprinkled over the glass surface treated with the water-repellent agent.

Comparative example 1

In the same manner as that of the embodiment 1, evaluations were made on the characteristic of the same wiper blade as that used in the embodiment 1 on which the surface coating layer was not formed and made of natural rubber and the same specimen, as that used in the embodiment 1, for evaluating the characteristic of the wiper blade. Test results are shown in table 2.

Comparative example 2 and Comparative example 3

100 parts by weight of fluorine-contained resin having hydroxyl group was diluted with 200 parts by weight of toluene and 400 parts by weight of methyl ethyl ketone. Then, except the PTFE and the organosilicone elastomer, the solid lubricant and the hardening agent each having the proportion shown in

THIS SHEET HAS BEEN REPLACED

This Sheet Has Been Replaced

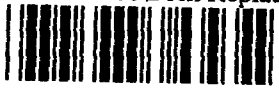

table 1 were added to the solution to obtain a surface layer-forming liquid. In the same condition and method as that of the embodiment 1 and using the surface layer-forming liquid, wiper blades having a surface coating layer of 8 - 15μm formed thereon and specimens were obtained.

The wiper blades and the specimens were evaluated in a manner similar to that of the embodiment 1. Test results are shown in table 2.

Comparative example 4

100 parts by weight of polyurethane resin was diluted with 350 parts by weight of methyl ethyl ketone. Then, the materials having the proportion shown in table 1 were added to the solution. Thereafter, the hardening agent having the proportion shown in table 1 was added to obtain a surface layer-forming liquid. In the same condition and method as that of the embodiment 1 and using the surface layer-forming liquid, a wiper blade having a surface coating layer of 8 - 15μm formed thereon and a specimen were obtained, except that the hardening condition shown in table 1 was used.

The wiper blade and the specimen were evaluated in a manner similar to that of the embodiment 1. Test results are shown in table 2.

Comparative example 5

100 parts by weight of resin formed by mixing urethane modified epoxy resin and diglycidyl ester at a weight ratio

of 6 : 4 was diluted with 500 parts by weight of methyl ethyl ketone. Then, the materials each having the proportion shown in table 1 were added to the solution. Thereafter, the hardening agent having the proportion shown in table 1 was added to the solution to obtain a surface layer-forming liquid. In the same condition and method as that of the embodiment 1 and using the surface layer-forming liquid, a wiper blade having a surface coating layer of 8 - 15μm formed thereon and a specimen were obtained, except that the hardening condition shown in table 1 was used.

The wiper blade and the specimen were evaluated in a manner similar to that of the embodiment 1. Test results are shown in table 2.

Comparative example 6

120 parts by volume of resin formed by mixing polyvinylidene fluoride-1 and polyvinylidene fluoride-2 with each other at a volume ratio of 83 : 17 was diluted with 180 parts by volume of dimethylformamide. Then, the material having the proportion shown in table 1 was added to the solution to obtain a surface layer-forming liquid. In the same condition and method as that of the embodiment 1 and using the surface layer-forming liquid, wiper blades having a surface coating layer of 8 - 15μm formed thereon and specimens were obtained, except that the hardening condition shown in table 1 was used.

The wiper blade and the specimen were evaluated in a manner similar to that of the embodiment 1. Test results are shown in table 2.

Comparative example 7

100 parts by weight of fluorine-contained resin having hydroxyl group was diluted with 200 parts by weight of toluene and 400 parts by weight of methyl ethyl ketone. Then, the materials each having the proportion shown in table 1 were added to the solution. Then, the hardening agent having the proportion shown in table 1 was added to the solution to obtain a surface layer-forming liquid. In the same condition and method as that of the embodiment 1 and using the surface layer-forming liquid and using acrylonitrile-butadiene rubber (NBR) as an elastomer, a wiper blade having a surface coating layer of 8 - 15μm formed thereon and a specimen were obtained, except that the hardening condition shown in table 1 was used.

The wiper blade and the specimen were evaluated in a manner similar to that of the embodiment 1. Test results are shown in table 2.

THIS SHEET HAS BEEN REPLACED

This Sheet Has Been Replaced



Table 1

Component *1 \ Example	Embodiment						Comparative example						
	1	2	3	4	5	6	1*2	2	3	4	5	6	7
Material of surface coating layer													
fluorine-contained resin having hydroxyl group	100	100	100	100	100	100	—	100	100	—	—	—	100
PTFE	120	120	130	120	130	—	—	—	—	130	130	—	140
organosilicone elastomer	38	38	—	38	40	40	—	—	—	20	20	—	10
graphite	38	38	50	38	—	30	—	50	—	3.5	3.5	15	3.5
molybdenum disulfide	—	—	—	—	30	80	—	—	50	—	—	—	—
hardening agent-1	12	—	10	12	15	12	—	10	10	60	—	—	12
hardening agent-2	—	25	—	—	—	—	—	—	—	—	—	—	—
polyurethane resin	—	—	—	—	—	—	—	—	—	100	—	—	—
urethane modified epoxy resin	—	—	—	—	—	—	—	—	—	—	60	—	—
diglycidyl ester	—	—	—	—	—	—	—	—	—	—	40	—	—
polyvinylidene fluoride-1	—	—	—	—	—	—	—	—	—	—	—	83	—
polyvinylidene fluoride-2	—	—	—	—	—	—	—	—	—	—	—	17	—
hardening agent-3	—	—	—	—	—	—	—	—	—	—	60	—	—
Material of blade body													
natural rubber (chlorinated)	○	○	○	—	○	○	○	○	○	○	○	○	—
SBR (chlorinated)	—	—	—	○	—	—	—	—	—	—	—	—	NBR
Hardening condition													
hardening temperature (℃)	80	70	80	80	80	80	—	80	80	80	80	100	80
hardening time period (minute)	15	300	15	15	15	15	—	15	15	30	30	30	30

Remarks: *1: Unit of each component is indicated by parts by weight except that unit of each component of comparative example 6 is indicated by parts by volume

*2: Blade body of comparative example 1 does not have surface coating layer

Table 2

Items \ Example	Embodiment 1	2	3	4	5	6	Comparative example 1	2	3	4	5	6	7
Edge-on-disc sliding contact test													
glass surface not treated with water-repellent agent													
friction coefficient	0.19	0.23	0.25	0.19	0.23	0.25	0.49	0.38	0.39	0.27	0.28	0.41	0.26
abrasion amount (mg)	1.2	1.3	1.7	1.5	1.8	1.9	6.2	4.7	4.5	2.2	2.2	3.7	2.4
glass surface treated with water-repellent agent													
friction coefficient	0.11	0.14	0.17	0.11	0.12	0.18	*1	0.37	0.35	0.25	0.25	0.39	0.23
abrasion amount (mg)	0.4	0.5	0.9	0.4	0.4	0.8	9.4*2	3.9	4.2	1.4	1.9	4.0	1.3
Wiper blade test													
glass surface not treated with water-repellent agent													
evaluation of wiping performance (mark)	4.0	4.0	4.0	4.5	4.0	4.0	4.0	3.0	3.0	4.0	4.0	3.0	4.0
evaluation of vibration (mark)	4.0	4.0	4.0	4.5	4.0	4.0	4.0	3.0	3.0	4.0	3.0	3.0	4.0
abrasion amount (mg)	0.48	0.44	0.54	0.50	0.50	0.54	0.54	0.51	0.52	0.45	0.45	0.51	0.45
maximum load (kg)	0.56	0.51	0.61	0.52	0.69	0.69	1.01	0.92	0.99	0.88	0.89	0.91	0.87
glass surface treated with water-repellent agent													
evaluation of vibration (mark)	3.5	3.5	3.5	4.0	3.5	3.5	3.5	3.0	3.0	3.5	3.0	3.0	3.5
*3	>8.0	>8.0	>8.0	>8.0	>8.0	>8.0	3.0	4.5	4.2	5.2	5.5	5.6	5.7
abrasion amount (mg)	0.48	0.52	1.24	0.69	0.77	1.14	3.18	2.74	2.94	1.96	2.11	2.10	1.90
maximum load (kg)	0.56	0.50	0.62	0.51	0.60	0.63	0.65	0.65	0.67	0.64	0.65	0.64	0.64
*4	2.0	2.2	2.0	2.4	2.0	2.0	1.0	0.8	0.7	1.1	1.1	1.2	1.1

Remarks: *1: unmeasurable in 15 hours
*2: abrasion amount in 15 hours
*3: time period in which acceptable degree of vibration is maintained (hour)
*4: water-repellent surface-treating film started to peel off from blade body (hour)

Table 3

Standard points for evaluation	Standard content for evaluating wiping performance
5	Completely wiped
4	Line-shaped wiping marks scatters on glass
3	Unclear wiping marks are left except in center
2	Clear wiping marks are left at several positions
1	Wiping marks are left entirely on glass surface

Table 4

Standard points for evaluation	Standard content for evaluating vibration
5	Judders are not observed visually
4	Judders occur only when wiper blade is turned around
3	Judders are observed on entire glass surface
2	Blade bounds on glass surface and stripes are left thereon
1	Blade bounds a long distance

As indicated in table 2, the wiper blade of the embodiments 1. through 6 are superior to that of the comparison

examples 1 through 7 in the edge-on-disc sliding-contact test and the wiper blade test.

Embodiment 7

Except that the surface coating layer was formed on the sliding-contact part 2 and the top surface 5 of the blade by using the wiper blade 1 having the shape shown in Fig. 1, a wiper blade was obtained in the same condition and method as that of the embodiment 1. Fig.4 shows a sectional view of the wiper blade obtained with embodiment 7. The wiper blade was evaluated in the same condition and method as that of the embodiment 1. The result was that the maximum load applied to an ordinary (not treated with water-repellent agent) glass surface was 0.69kg. To the glass surface treated with water-repellent agent, the time period in which acceptable degree of judder was maintained was more than eight hours; the amount of abrasion was 1.02mg; and the period of time to start peeling off the water-repellent surface-treating film from glass surface was 2.0 hours.

As shown above, in the case of the glass surface not treated with water-repellent agent, the wiper blade of the embodiments 1 through 7 showed superior maximum load characteristics and in the case of the glass surface treated with the water-repellent agent, it was superior to that of the comparison examples 1 through 7 in the time period in which acceptable degree of judder was maintained; the amount of

abrasion; and the period of time between the time when the wiper blade started to operate and the time when the water-repellent surface-treating film started to peel off from the blade body.

Industrial Applicability

As apparent from the foregoing description of the embodiments, the wiper blade of the present invention is superior in its wiping performance, judder-suppressing performance, and durability.

The surface coating layer is formed of the fluorine-contained resin containing the hydroxyl group; the isocyanate compound and/or the melamine resin used as the hardening agent; the polytetrafluoroethylene resin; and the organosilicone elastomer. The surface coating layer having this structure improves the above-described characteristics, thus having favorable wiping performance, judder-suppressing performance, and durability for the surface of a transparent material treated with the water-repellent agent.

According to the method of manufacturing the wiper blade, the surface coating layer is cut off from the blade body after the surface coating layer is formed thereon. Thus, the surface coating layer is present only on both side surfaces of the blade body, and the wiper blade has a high degree of edge accuracy.

THIS SHEET HAS BEEN REPLACED

This Sheet Has Been Replaced



This Sheet Has Been Replaced

CLAIMS

1. A wiper blade comprising,

a body made of an elastomer and

a surface coating layer on the body, the coating layer comprising a fluorine-contained resin having reactive groups in a molecule thereof and a hardening agent having reactivity with the reactive groups,

wherein the surface coating layer is formed on only both side surfaces of the body.

2. A wiper blade according to claim 1, wherein the surface coating layer comprises a mixture of 100 parts by weight of the fluorine-contained resin having the reactive groups in the molecule thereof and 10 - 110 parts by weight of a solid lubricant.

3. A wiper blade comprising,

a body made of an elastomer and

a surface coating layer on the body, the coating layer comprising a fluorine-contained resin having reactive groups in a molecule thereof and a hardening agent having reactivity with the reactive groups,

wherein the surface coating layer comprises a mixture of 100 parts by weight of the fluorine-contained resin having the reactive groups in the molecule thereof and 10 - 110 parts by weight of a solid lubricant.

4. A wiper blade according to any of claims 1 to 3, wherein

THIS SHEET HAS BEEN REPLACED

* C L M S *

This Sheet Has Been Replaced

the reactive group comprises a hydroxyl group and the hardening agent comprises at least one agent selected from the group consisting of an isocyanate compound and a melamine resin.

5. A wiper blade according to any of claims 1 to 4, wherein the surface coating layer further comprises polytetrafluoroethylene resins.

6. A wiper blade according to any of claims 1 to 4, wherein the surface coating layer further comprises organosilicone elastomers.

7. A wiper blade according to claim 2 or claim3, wherein the solid lubricant consists essentially of graphite.

8. A wiper blade according to any of claims 1 to 7, wherein the surface coating layer slidably contacts a surface of a transparent material having at least one layer thereof water-repellently treated.

9. A method of manufacturing the wiper blade of claim 1, comprising the steps of:

forming a plurality of blade bodies continuously in a widthwise direction of the wiper blade;

forming a surface coating layer on a surface of each blade body; and

cutting each blade body in parallel with a lengthwise direction of the wiper blade.

* C L M S *

THIS SHEET HAS BEEN REPLACED

ABSTRACT

A wiper blade comprising a body made of an elastomeric material; and a surface coating layer positioned on a surface of the body and comprising a fluorine-contained resin having reactive groups in the molecules thereof and a hardening agent having reactivity with the reactive groups. The surface coating layer is formed on only both side surfaces of the body. Thus, the wiper blade has a high degree of flexibility and restoring property; a high degree of durability; and judders in a slight extent when it slides on a glass surface in contact therewith; a high wiping performance; and maintains its wiping performance for a long time.

FIG. 1

FIG.1

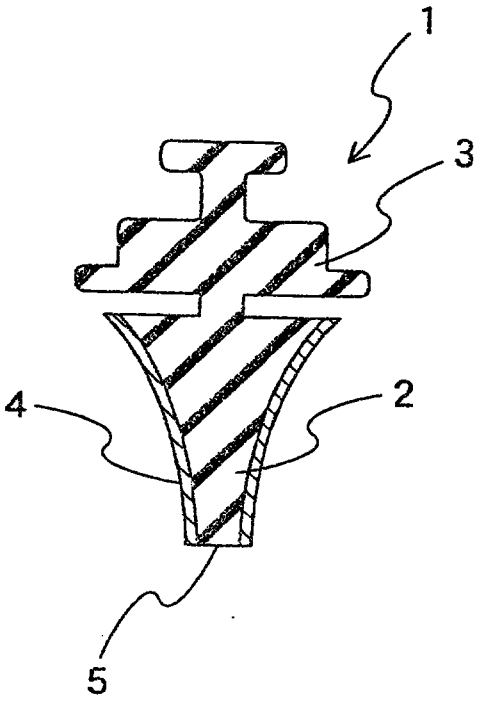

FIG.2A

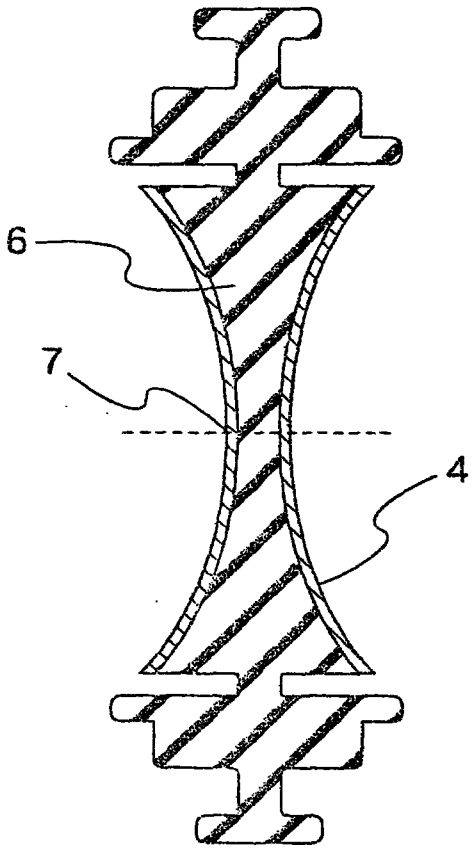

FIG.2B

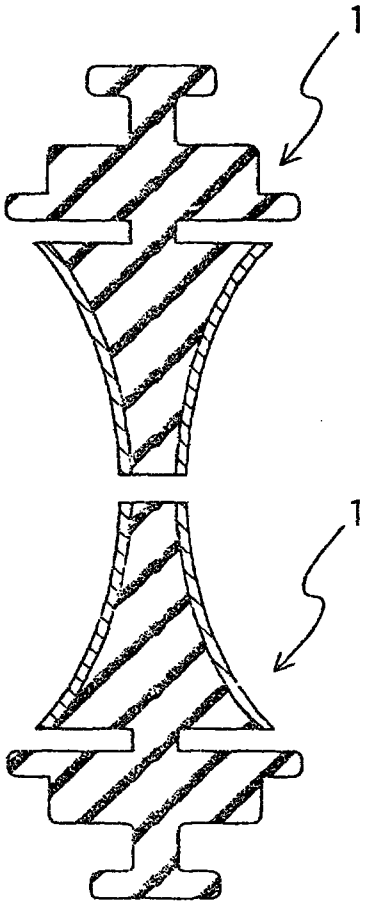

FIG.3

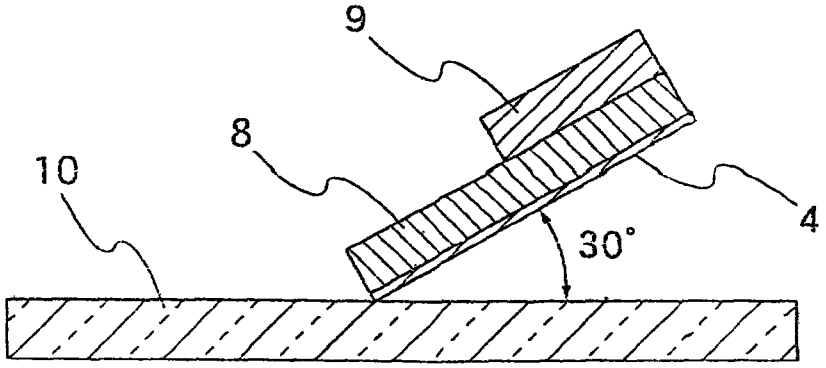

FIG.4

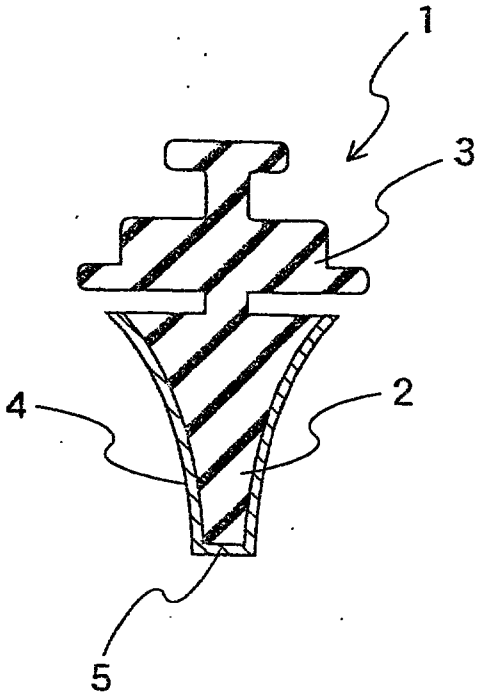

9802684-2
IPOS replacement page

maintains its wiping performance for a long time.

It is another object of the present invention to provide a method of manufacturing the wiper blade.

Disclosure of Invention

A wiper blade of the present invention comprises a body made of an elastomer and a surface coating layer on the body. The coating layer comprises a fluorine containing resin having reactive groups in a molecule thereof and a hardening agent having reactivity with the reactive groups. And the surface coating layer is formed on only both side surfaces of the body.

The surface coating layer is a mixture of 100 parts by weight of the fluorine-containing resin having the reactive group in a molecule thereof and 10 - 110 parts by weight of a solid lubricant.

Another wiper blade of the present invention comprises a body made of an elastomer and a surface coating layer on the body. The coating layer comprises a fluorine-containing resin having reactive groups in a molecule thereof and a hardening agent having reactivity with the reactive groups. The surface coating layer comprises a mixture of 100 parts by weight of the fluorine-containing resin having the reactive group in the molecule thereof and 10 - 110 parts by weight of a solid lubricant.

REPLACEMENT SHEET
02 SEP 1999

9802684-2
2/9/99

In the above described wiper blade, the reactive group of the fluorine-containing resin is hydroxyl group, and the hardening agent is an isocyanate compound and/or melamine resin.

The surface coating layer contains polytetrafluoroethylene resin and/or an organosilicone elastomer. The solid lubricant consists essentially of graphite.

The surface coating layer slidably contacts a surface of a transparent material having at least one layer thereof water-repellently treated.

A method of manufacturing the wiper blade of the present invention comprises the steps of forming a plurality of blade bodies continuously in a widthwise direction of the wiper blade, forming a surface coating layer on a surface of each blade body and cutting each blade body in parallel with a lengthwise direction of the wiper blade.

The manufacturing method allows the wiper blade to have the surface coating layer on only both side surfaces of the blade body. The longer side of the wiper blade having a predetermined thickness is defined as the lengthwise direction, and the shorter side thereof is defined as the widthwise direction.

The manufacturing method enhances the edge accuracy of the wiper blade and allows the surface coating layer to be

REPLACEMENT SHEET
02 SEP 1999

formed on only both side surfaces of the blade body.

"Both side surfaces of the blade body" means surfaces which slidably contact the surface of glass during wiping action. "Wiper blade has the surface coating layer on only both side surfaces of the blade body" means that the surface coating layer is formed on both side surfaces which slidably contact the surface of glass and not on the top surface of the wiper blade.

In addition to the above-described construction, the surface coating layer comprises the fluorine-containing resin having the hydroxyl groups in the molecules thereof and the hardening agent having reactivity with the hydroxyl groups. The surface coating layer firmly adheres to the surface of the blade body made of the elastomer, thus improving the durability of the blade outstandingly. The surface coating layer is a mixture of 100 parts by weight of the fluorine-containing resin and 10 - 110 parts by weight of the solid lubricant. The surface coating layer having this composition allows the wiper blade to have a high degree of durability and wipes surface of a transparent material, for example, glass having at least one layer treated with water-repellent agent. Further, because the surface coating layer contains the polytetrafluoroethylene resin or the organosilicone elastomer, the surface coating layer has an improved wear resistance and sliding performance.

REPLACEMENT SHEET
07 SEP 1999

Because the surface coating layer is a mixture of 100 parts by weight of the fluorine-containing resin and 10 - 110 parts by weight of the solid lubricant, the surface coating layer wipes the water-repellent glass surface and is durable even though the surface coating layer is formed on the top surface of the wiper blade.

Further, when graphite is used as the solid lubricant, the above-described characteristics can be enhanced.

Brief Description of the Drawings

Fig. 1 is a sectional view showing a wiper blade;

Fig. 2A and Fig. 2B are a view showing an example of a method of manufacturing the wiper blade; and

Fig. 3 is a view showing a method of measuring a friction coefficient and an abrasion amount.

Fig.4 is a sectional view showing a wiper blade obtained with embodiment 7.

Best Mode for Carrying Out the Invention

The elastomer of the present invention forming the body of the wiper blade is not limited to a specific one, but those displaying rubber elasticity when the wiper blade is operated can be used. For example, natural rubber (NR), isoprene rubber (IR), styrene-butadiene rubber (SBR), butadiene rubber (BR), chloroprene rubber (CR), acrylonitrile-butadiene rubber

REPLACEMENT SHEET
02 SEP 1999

(NBR), ethylene propylene rubber can be preferably used. The natural rubber (NR) and the styrene-butadiene rubber (SBR) can be preferably used as the elastomers which preferably wipe a glass surface treated with water-repellent agent, without the wiper blade vibrating in sliding contact therewith.

It is preferable that the elastomers have a rubber hardness in a range of 50° - 80° measured in accordance with JIS K 6301 to maintain the flexibility and restoring performance of the wiper blade. In order to improve the weatherability of the elastomeric materials, ozone-absorbing agent, age resistance agent, and wax can be added to the elastomers.

In order to improve an adhesion of the surface coating layer to the elastomer, it is preferable that the surface of the elastomer is halogenated, subjected to plasma treatment at low temperatures, corona discharge treatment, and ultraviolet ray irradiation. Halogenation is most favorable to improve the adhesion of the surface coating layer to the elastomer. As the halogenation, chlorination, bromization, iodization or fluorination is used.

The fluorine- **containing** resin having a reactive group in molecules thereof and constituting the surface coating layer has the reactive group at side chains of the fluorine-**containing** resin or the terminals of molecular chains thereof. The reactive group includes hydroxyl group (-OH), isocyanate group (-NCO), carboxyl group (-COOH), -NHR group (R of NHR is

REPLACEMENT SHEET
02 SEP 1999

hydrogen, alkyl group or alkoxyl group), mercapto group (-SH), epoxy group, acetoxy group ($-COOCH_3$), and sulfonic group ($-SO_3H$. The fluorine-containing resin having the hydroxyl group (-OH) in the molecules thereof can be most favorably used. More specifically, the fluorine-containing resin which is a copolymer comprising the unit of fluoroolefin and the unit of vinyl ether and having the hydroxyl group (-OH) in the unit of the vinyl ether can be most favorably used.

It is possible to use the fluorine-containing resin having $-C_xF_{2x}-O-$ (x is integers of one to four) as the main structural unit thereof and having the above-described reactive group at side chain or the terminal of molecular chain of a polymer having an average molecular weight of about 1,000 - 10,000.

As the hardening agents which reacts with the fluorine-containing resin having the reactive group in the molecules thereof, it is possible to use those having a functional group which reacts with the reactive group of the fluorine-containing resin. In particular, when the reactive group consists of the hydroxyl group, hardening agents containing the isocyanate group (-NCO) and the -NHR group can be preferably used. These hardening agents can be used singly or as a mixture.

As the hardening agents having the isocyanate group (-NCO), polyisocyanates having two or more isocyanate groups connected with aliphatic group, alicyclic group or aromatic group can be preferably used. For example, hexamethylene

REPLACEMENT SHEET
02 SEP 1999

diisocyanate, phenylene diisocyanate, tolylene diisocyanate, diphenylmethane diisocyanate, naphthalene diisocyanate can be preferably used. These hardening agents can be used in the form of monomer, dimer or trimer. It is possible to use blocked isocyanates obtained by blocking active isocyanate group with a phenol-contained compound or caprolactam, or to use polyisocyanates which is the product of the reaction of polyols with the polyisocyanate and has the isocyanate group at the terminal of molecular chain thereof.

It is preferable to set the mixing ratio between the fluorine-containing resin having the hydroxyl group (-OH) and the hardening agent having the isocyanate group (-NCO) to 1 : 0.5 - 1.1 in equivalent ratio. In order to allow the surface coating layer to be flexible and the wiper blade to have an improved wiping performance, it is more preferable to set the mixing ratio between the fluorine-containing resin and the hardening agent to 1 : 0.6 - 1.

As the hardening agent having the -NHR group, melamine resin can be preferably used. For example, butylated methylol melamine and hexamethoxy methylated melamine are preferable.

It is preferable to mix the fluorine-containing resin having the hydroxyl group (-OH) and the hardening agent having the -NHR group with each other at a weight ratio of 6 - 9 : 1 - 4 to allow the wiper blade to have a favorable wiping performance.

REPLACEMENT SHEET
02 SEP 1999

The polytetrafluoroethylene resin (hereinafter referred to as PTFE) of the present invention means a polymer of tetrafluoroethylene. It is possible to use the PTFE obtained by any one of the following polymerization methods: block polymerization, solution polymerization, suspension polymerization, blow polymerization, and emulsion polymerization.

In addition, it is possible to use so-called reclaimed powdered PTFE which is obtained by molding virgin PTFE obtained by one of the above-described polymerization methods and then, sintering the molded PTFE and then, pulverizing the sintered PTFE; so-called powdered PTFE lubricating powder obtained by treating the virgin PTFE with gamma lay irradiation or the like; and finely powdered PTFE obtained by pulverizing the virgin PTFE.

Favorably, the average diameter of the PTFE is smaller than 30μm and more favorably, smaller than 15μm to allow the thickness of the surface coating layer and the surface roughness thereof to be uniform. It is preferable that the minimum diameter of the PTFE is greater than the diameter at which the PTFE powders agglomerate.

It is preferable to mix 70 - 150 parts by weight of the PTFE powders with 100 parts by weight of the fluorine-containing resin having the reactive groups in the molecules thereof. If the part by weight of the PTFE powders is less than 70, the surface coating layer has a poor lubricating

REPLACEMENT SHEET
02 SEP 1999

performance. If the part by weight of the PTFE powders is more than 150, the surface coating layer has a poor adhesiveness to the elastomer.

The organosilicone elastomer of the present invention contains organosiloxane bond at the main chains of the molecules thereof and displays rubber elasticity. For example, methyl silicone rubber, vinyl-methyl silicone rubber, phenyl-methyl silicone rubber, and fluorinated silicone rubber can be preferably used. Preferably, these rubbers are cured at 150° - 180°C by adding curing agent thereto and pulverized or cured rubbers are subjected to secondary curing at 190° - 220°C and then, pulverized.

It is preferable that the average diameter of the organosilicone elastomer is 1μm - 10μm. It is favorable to mix 10 - 50 parts by weight of the organosilicone elastomer with 100 parts by weight of the fluorine-containing resin having the reactive groups in the molecules thereof. It is more favorable to mix 30 - 50 parts by weight of the former with 100 parts by weight of the latter. If the average diameter of the organosilicone elastomer is greater than 10μm or if the mixing amount thereof is more than 50 parts by weight, the surface coating layer has a low strength and a deteriorated wear resistance. If the average diameter of the organosilicone elastomer is smaller than 1μm, the dispersibility thereof in the surface coating layer is

REPLACEMENT SHEET
02 SEP 1999

unfavorable and the sliding performance and wear resistance of the surface coating layer deteriorate. If the mixing amount of the organosilicone elastomer is smaller than 10 parts by weight, the surface coating layer has deteriorated sliding performance and wear resistance.

It is possible to mix the powdered solid lubricant with the fluorine-containing resin to improve the sliding performance and wear resistance of the surface coating layer. The solid lubricant includes graphite, molybdenum disulfide (MoS_2), carbon, boron nitride, graphite fluoride, and tungsten disulfide (WS_2). These solid lubricants can be used singly or as a mixture.

The graphite and the molybdenum disulfide are most favorable of the above-described solid lubricants. Both artificial graphite and natural graphite can be used. It is preferable that the average diameter of the solid lubricant is 0.5μm - 12μm. If the average diameter of the solid lubricant is greater than 12μm, the surface coating layer has a degraded wear resistance. If the average diameter of the solid lubricant is smaller than 0.5μm, it has a degraded dispersibility in the surface coating layer.

By mixing an appropriate amount of the solid lubricant with the flucrine-containing resin, the sliding performance and wear resistance of the surface coating layer can be improved; the judder of the wiper blade can be suppressed; and the

REPLACEMENT SHEET
02 SEP 1999

wiping performance thereof can be improved.

It is favorable to mix 10 - 110 parts by weight of the solid lubricant with 100 parts by weight of the fluorine-containing resin having the reactive groups in the molecules thereof. It is favorable to mix 25 - 65 parts by weight of the graphite with 100 parts by weight of the fluorine-containing resin to suppress judder of the wiper blade and improve the wiping performance of the surface coating layer. If the mixing amount of the solid lubricant is more than 110 parts by weight, the surface coating layer has a deteriorated wear resistance. If the mixing amount of the solid lubricant is smaller than 10 parts by weight, the surface coating layer has deteriorated sliding performance and wear resistance, and in addition, is liable to judder when the wiper blade slides in contact with the surface of a transparent material, especially the water-repellent surface of a transparent material, for example, a glass surface.

Examining the correlation between the judder and the state of the surface coating layer, the surface coating layer of the present invention which showed a superior characteristic in a wiper blade test which will be described later had stripes thereon in the lengthwise direction of the wiper blade.

The transparent material of the present invention means a transparent substance which allows light to pass there-

REPLACEMENT SHEET
02 SEP 1999

A glass surface having even one layer treated with the water-repellent agent causes the wiper blade to judder thereon.

The surface coating layer of the present invention is capable of containing various substances, provided that they do not deteriorate the effect of the present invention.

Such mixing substances include inorganic fillers such as mica, talc, kaolin, calcium carbonate, and calcium sulfate; resins such as polyamide resin, polyimide resin, polyamide-imide resin, polyether imide resin, polyphenylene sulfide resin, polyolefin resins such as polyethylene and polypropylene, polyacetal resin, aromatic polyester resin, aromatic polyether ketone resin, aromatic polyether ether ketone resin, and polyurethane resin; rubbers such as fluorine rubber, urethane rubber, polyethylene rubber, polybutadiene rubber, and thermoplastic elastomer; fibers such as potassium titanate fiber, glass fiber, carbon fiber, aluminum borate whisker fiber, wollastnite, and aramid fiber.

The liquid for forming the surface coating layer is obtained by dissolving or dispersing, in an organic solvent, a mixture of the fluorine-containing resin having the reactive groups in the molecules thereof, the hardening agent, polytetrafluoroethylene resin, an organosilicone elastomer, and the solid lubricant. The above substances are mixed with each other in the following methods: According to a first

REPLACEMENT SHEET
02 SEP 1999

mixing method, the fluorine-containing resin is mixed with the PTFE, the organosilicone elastomer, and various components, and then, the hardening agent is added to the mixture; according to a second mixing method, after the PTFE, the organosilicone elastomer, and various components are mixed with each other to form a mixture by a mixer, the fluorine-containing resin is mixed with the mixture, and then, the hardening agent is added to the mixture; according to a third mixing method, all the components are mixed with each other all together.

The wiper blade of the present invention will be described below with reference to Fig. 1 showing it in section.

The wiper blade 1 comprises a sliding-contact part 2 slidably contacting a glass surface; a fixing part 3 fixed to the fixing part of a wiper; a surface coating layer 4 formed on the sliding-contact part 2 positioned at both side surfaces of the blade body. The surface coating layer 4 is not formed on the top surface 5 of the wiper blade 1. The wiper blade 1 having this shape has a favorable wiping performance without vibrating on a glass surface treated with the water-repellent agent. This superior performance of the wiper blade can be enhanced by forming, on the wiper blade 1, a surface coating layer of a mixture of 100 parts by weight of the fluorine-containing resin and 10 - 110 parts by weight of the solid

REPLACEMENT SHEET
02 SEP 1999

each of two unseparated blade bodies 6, as shown in Fig. 2A. Then, a portion 7 is cut to form the top surface of the blade. In this manner, the two wiper blades 1, 1 having no surface coating layer formed on the top end of each blade is obtained, as shown in Fig. 2B. This method is particularly favorable to enhance the accuracy of the edge (top end) of the wiper blade.

Methods can be used, provided that they do not form the surface coating layer on the top surface 5 of the blade. For example, it is possible to adopt a method of forming a coating layer on the entire surface of the blade and cutting the top end of the blade.

Favorably, the thickness of the surface coating layer is 2μm - 50μm and more favorably, 3μm - 20μm. The surface coating layer having a thickness in the above range has superior following ability with the blade body made of an elastomer and durablity. The surface coating layer having a thickness smaller than 2μm is inferior in its durability. The surface coating layer having a thickness greater than 50μm is inferior in its initial wiping performance.

Materials which are used in embodiments and comparative examples are shown below.

1) Fluorine-containing resin having hydroxyl group (-OH): Fluonate K702 (trade name, manufactured by Dainippon Ink & Chemicals Inc.)

REPLACEMENT SHEET
02 SEP 1999

Fuji Kasei Kogyo Co., Ltd.)

14) Blade body: curing agent, curing accelerator, auxiliaries for curing accelerator, age resistor, processing aid, reinforcing agent such as carbon black, filler agent and the like are added to a natural rubber (NR), styrene-butadiene rubber (SBR) or acrylonitrile-butadiene rubber (NBR) to form an elastomer having a rubber hardness of 60° after curing.

Embodiment 1 - Embodiment 6

100 parts by weight of fluorine-containing resin having hydroxyl group was diluted with 200 parts by weight of toluene and 400 parts by weight of methyl ethyl ketone. Then, materials each having the proportion shown in table 1 were added to the solution. Then, hardening agents each having the proportion shown in table 1 were added to the solution to obtain a surface layer-forming liquid.

The surface layer-forming liquid was applied to both side surfaces of a blade body 6 having a shape shown in Fig. 2A by spray method and then hardened in the condition shown in table 1. After the surface coating layer 4 was formed, the portion 7 was cut to form the top surface of the blade to obtain the wiper blade 1. The wiper blade 1 had a length of 500mm. The blade body was made of chlorinated natural rubber (NR) or chlorinated styrene-butadiene rubber (SBR). The thickness of the surface coating layer was 8μm - 15μm.

As the specimen for evaluating the characteristic of the

REPLACEMENT SHEET
02 SEP 1999

each specimen 8.

2) Wiper blade test

The following tests were conducted on a glass surface and a glass surface treated with silicone-containing water-repellent agent (Super rain X) commercially available, using the wiper blade (shown in Fig. 1) having a length of 500mm.

2)-1 Wiping test (to the glass surface alone)

After water was sprinkled over the glass surface, the amount of water left on the glass surface not treated with the Super rain X was visually evaluated, based on the standard shown in table 3.

2)-2 Judder test

* Initial performance ... After water was sprinkled over the glass surface, the degree of judder of the wiper blade was visually evaluated, based on the standard shown in table 4.

* Performance of wiper blade with age ... Water was sprinkled over the glass surface while the wiper blade was operated to measure the period of time until the evaluation standard point exceeds point 3 in table 4. The test to examine the performance of the wiper blade with age was conducted on the glass surface treated with the water-repellent agent.

2)-3 Abrasion test ... The amount of abrasion of the wiper blade at its edge was measured after the wiper blade was operated at a specified number of times, with water kept to be sprinkled over the glass surface intermittently every

REPLACEMENT SHEET
02 SEP 1999

certain period of time.

2)-4 Load test ... This test is to measure the maximum amount of load applied to the wiper system operating between the time when water was sprinkled over the glass surface and the time when the glass surface became dry.

2)-5 Peel test of water-repellent surface-treating film ... This test is to measure the period of time between the time when the wiper blade started to operate and the time when the water-repellent surface-treating film started to peel off from the blade body while water was kept to be sprinkled over the glass surface treated with the water-repellent agent.

Comparative example 1

In the same manner as that of the embodiment 1, evaluations were made on the characteristic of the same wiper blade as that used in the embodiment 1 on which the surface coating layer was not formed and made of natural rubber and the same specimen, as that used in the embodiment 1, for evaluating the characteristic of the wiper blade. Test results are shown in table 2.

Comparative example 2 and Comparative example 3

100 parts by weight of fluorine-containing resin having hydroxyl group was diluted with 200 parts by weight of toluene and 400 parts by weight of methyl ethyl ketone. Then, except the PTFE and the organosilicone elastomer, the solid lubricant and the hardening agent each having the proportion shown in

REPLACEMENT SHEET
02 SEP 1999

The wiper blade and the specimen were evaluated in a manner similar to that of the embodiment 1. Test results are shown in table 2.

Comparative example 7

100 parts by weight of fluorine-containing resin having hydroxyl group was diluted with 200 parts by weight of toluene and 400 parts by weight of methyl ethyl ketone. Then, the materials each having the proportion shown in table 1 were added to the solution. Then, the hardening agent having the proportion shown in table 1 was added to the solution to obtain a surface layer-forming liquid. In the same condition and method as that of the embodiment 1 and using the surface layer-forming liquid and using acrylonitrile-butadiene rubber (NBR) as an elastomer, a wiper blade having a surface coating layer of 8 - 15μm formed thereon and a specimen were obtained, except that the hardening condition shown in table 1 was used.

The wiper blade and the specimen were evaluated in a manner similar to that of the embodiment 1. Test results are shown in table 2.

REPLACEMENT SHEET
02 SEP 1999

abrasion; and the period of time between the time when the wiper blade started to operate and the time when the water-repellent surface-treating film started to peel off from the blade body.

Industrial Applicability

As apparent from the foregoing description of the embodiments, the wiper blade of the present invention is superior in its wiping performance, judder-suppressing performance, and durability.

The surface coating layer is formed of the fluorine-containing resin containing the hydroxyl group; the isocyanate compound and/or the melamine resin used as the hardening agent; the polytetrafluoroethylene resin; and the organosilicone elastomer. The surface coating layer having this structure improves the above-described characteristics, thus having favorable wiping performance, judder-suppressing performance, and durability for the surface of a transparent material treated with the water-repellent agent.

According to the method of manufacturing the wiper blade, the surface coating layer is cut off from the blade body after the surface coating layer is formed thereon. Thus, the surface coating layer is present only on both side surfaces of the blade body, and the wiper blade has a high degree of edge accuracy.

REPLACEMENT SHEET
02 SEP 1999

CLAIMS

1. A judder-suppressing wiper blade comprising,

a body made of an elastomer and

a surface coating layer on the body, the coating layer comprising a fluorine-containing [fluorine-contained] resin having hydroxyl group [reactive groups] in a molecule thereof and a hardening agent having reactivity with the hydroxyl group [reactive groups],

wherein the surface coating layer is formed on only both side surfaces of the body.

2. A judder-suppressing wiper blade for glass surface treated with water-repellant agent comprising,

a body made of an elastomer and

a surface coating layer on the body, the coating layer comprising a fluorine-containing [fluorine-contained] resin having hydroxyl group [reactive groups] in a molecule thereof and a hardening agent having reactivity with the hydroxyl group [reactive groups],

wherein the surface coating layer is formed on only both side surfaces of the body.

3. A wiper blade for glass surface treated with water-repellant agent comprising,

a body made of an elastomer and

a surface coating layer on the body, the coating layer comprising a fluorine-containing [fluorine-contained] resin having hydroxyl group [reactive groups] in a molecule thereof and a hardening agent having reactivity with the hydroxyl group [reactive groups],

wherein the surface coating layer is formed on only both side surfaces of the body.

REPLACEMENT SHEET
02 SEP 1999

* C L M S *

4. A wiper blade according to any of claim 1 to 3, wherein the surface coating layer comprises a mixture of 100 parts by weight of the fluorine-containing [fluorine-contained] resin having hydroxyl group [reactive groups] in the molecule thereof and 10 - 110 parts by weight of a solid lubricant consists essentially of the lubricant selected from the group consisting of a graphite, molybdenum disulfide, carbon, boron nitride and tungsten disulfide.

5. A judder-suppressing wiper blade comprising,

a body made of an elastomer and

a surface coating layer on the body, the coating layer comprising a fluorine-containing [fluorine-contained] resin having hydroxyl group [reactive groups] in a molecule thereof and a hardening agent having reactivity with the hydroxyl group [reactive groups],

wherein the surface coating layer comprises a mixture of 100 parts by weight of the fluorine-containing [fluorine-contained] resin having the hydroxyl group [reactive groups] in the molecule thereof and 10 - 110 parts by weight of a solid lubricant consists essentially of the lubricant selected from the group consisting of a graphite, molybdenum disulfide, carbon, boron nitride and tungsten disulfide.

6. A judder-suppressing wiper blade for glass surface treated with water-repellant agent comprising,

a body made of an elastomer and

a surface coating layer on the body, the coating layer comprising a fluorine-containing [fluorine-contained] resin having hydroxyl group [reactive groups] in a molecule thereof and a hardening agent having reactivity with the hydroxyl group [reactive groups],

REPLACEMENT SHEET
02 SEP 1999



wherein the surface coating layer comprises a mixture of 100 parts by weight of the fluorine-containing [fluorine-contained] resin having the hydroxyl group [reactive groups] in the molecule thereof and 10 - 110 parts by weight of a solid lubricant consists essentially of the lubricant selecred from the group consisting of a graphite, molybdenum disulfide, carbon, boron nitride and tungsten disulfide.

7 . A wiper blade for glass surface treated with water-repellant agent comprising,

a body made of an elastomer and

a surface coating layer on the body, the coating layer comprising a fluorine-containing [fluorine-contained] resin having hydroxyl group [reactive groups] in a molecule thereof and a hardening agent having reactivity with the hydroxyl group [reactive groups],

wherein the surface coating layer comprises a mixture of 100 parts by weight of the fluorine-containing [fluorine-contained] resin having the hydroxyl group [reactive groups] in the molecule thereof and 10 - 110 parts by weight of a solid lubricant consists essentially of the lubricant selected from the group consisting of a graphite, molybdenum disulfide, carbon, boron nitride and tungsten disulfide.

8. A wiper blade according to claims 1 to 7, wherein [the reactive group comprises a hydroxyl group and] the hardening agent comprises at least one agent selected from the group consisting of an isocyanate compound and a melamine resin.

9. A wiper blade according to any of claims 1 to 8, wherein the surface coating layer further comprises polytetrafluoro-ethylene resins.

REPLACEMENT SHEET
02 SEP 1999

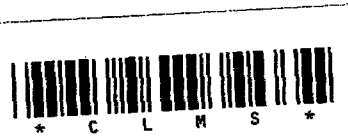

10. A wiper blade according to any of claims 1 to 8, wherein the surface coating layer further comprises organosilicone elastomers.

11. A wiper blade according to any of claims 4 to 7, wherein the solid lubricant consists essentially of graphite.

12. A wiper blade according to any of claims 1 to 11, wherein the surface coating layer slidably contacts a surface of a transparent material having at least one layer thereof water-repellently treated.

13. A wiper blade according to claim 12, wherein said water-repellant agent is a silicone-containing agent.

REPLACEMENT SHEET
02 SEP 1999



9802684-2
IPOS

世界知的所有権機関
国際事務局

PCT 特許協力条約に基づいて公開された国際出願

(51) 国際特許分類6 **B60S 1/38**	**A1**	(11) 国際公開番号	**WO98/12085**
		(43) 国際公開日	1998年3月26日(26.03.98)

(21) 国際出願番号 PCT/JP97/03312

(22) 国際出願日 1997年9月19日(19.09.97)

(30) 優先権データ
特願平8/250246 1996年9月20日(20.09.96) JP

(71) 出願人
日本ワイパブレード株式会社
(NIPPON WIPER BLADE CO., LTD.)[JP/JP]
〒347 埼玉県加須市大字下高柳字沼頭311番地 Saitama, (JP)
(72) 発明者
東 亮(AZUMA, Ryou)
〒175 東京都板橋区成増3-21-15 Tokyo, (JP)
栗原順一(KURIHARA, Junichi)
〒347 埼玉県加須市富士見町10-42 Saitama, (JP)
梅本 昇(UMEMOTO, Noboru)
〒511-02 三重県員弁郡東員町城山2丁目8番地の12 Mie, (JP)
里路文規(SATOJI, Fuminori)
〒510 三重県四日市市川島町6200-256 Mie, (JP)
(74) 代理人
弁理士 和気 操(WAKI, Misao)
〒511 三重県桑名市矢田町625番地 Mie, (JP)

(81) 指定国 AU, BR, CA, CN, ID, KR, NZ, SG, 欧州特許(AT, BE, CH, DE, DK, ES, FI, FR, GB, GR, IE, IT, LU, MC, NL, PT, SE).

添付公開書類
国際調査報告書

(54)Title: **WIPER BLADE AND METHOD FOR PRODUCTION THEREOF**

(54)発明の名称 ワイパーブレードおよびその製造方法

(57) Abstract

A wiper blade comprising a blade main body made of a rubber elastomer and a surface coating layer consisting of a fluorocarbon resin containing reactive groups inside the molecules and a curing agent having reactivity with the reactive groups and provided on the surface of the main body, wherein the surface coating layer is formed on only both sides of the blade main body. Therefore, the wiper has a high flexibility, high recovery properties, a high durability, and a wiping performance without squeal and vibration, and can keep the wiping performance for a long time.

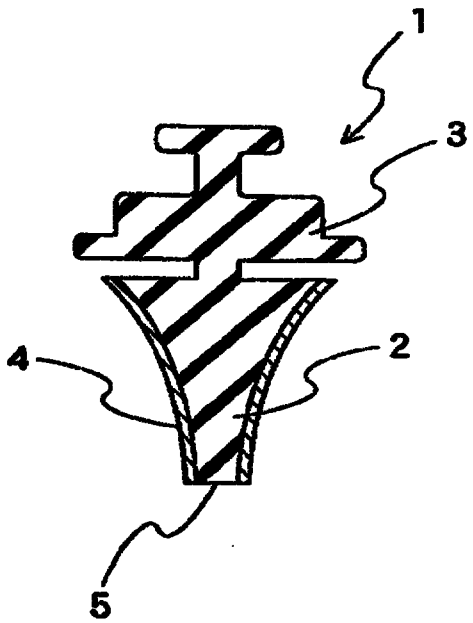

（５７）要約

ゴム弾性体よりなるブレード本体と、この本体表面に、分子内に反応性基を有するフッ素系樹脂と、反応性基と反応性を有する硬化剤とからなる表面被覆層を有するワイパーブレードであって、表面被覆層が、ブレード本体の両側面のみに形成されている。これにより柔軟性や復元性が高く、耐久性に優れ、ガラス表面に対してビビリ振動がなく拭き取り性能に優れていると共に、その性能を長期間維持する。

ＰＣＴに基づいて公開される国際出願のパンフレット第一頁に記載されたＰＣＴ加盟国を同定するために使用されるコード（参考情報）

AL	アルバニア	ES	スペイン	LK	スリランカ	SE	スウェーデン
AM	アルメニア	FI	フィンランド	LR	リベリア	SG	シンガポール
AT	オーストリア	FR	フランス	LS	レソト	SI	スロヴェニア
AU	オーストラリア	GA	ガボン	LT	リトアニア	SK	スロヴァキア共和国
AZ	アゼルバイジャン	GB	英国	LU	ルクセンブルグ	SL	シエラレオネ
BA	ボズニア・エルツェゴビナ	GE	グルジア	LV	ラトヴィア	SN	セネガル
BB	バルバドス	GH	ガーナ	MC	モナコ	SZ	スワジランド
BE	ベルギー	GM	ガンビア	MD	モルドヴァ共和国	TD	チャード
BF	ブルギナ・ファソ	GN	ギニア	MG	マダガスカル	TG	トーゴ
BG	ブルガリア	GW	ギニアビサウ	MK	マケドニア旧ユーゴスラヴィア共和国	TJ	タジキスタン
BJ	ベナン	GR	ギリシャ	ML	マリ	TM	トルクメニスタン
BR	ブラジル	HU	ハンガリー	MN	モンゴル	TR	トルコ
BY	ベラルーシ	ID	インドネシア	MR	モーリタニア	TT	トリニダード・トバゴ
CA	カナダ	IE	アイルランド	MW	マラウイ	UA	ウクライナ
CF	中央アフリカ共和国	IL	イスラエル	MX	メキシコ	UG	ウガンダ
CG	コンゴー	IS	アイスランド	NE	ニジェール	US	米国
CH	スイス	IT	イタリア	NL	オランダ	UZ	ウズベキスタン
CI	コート・ジボアール	JP	日本	NO	ノルウェー	VN	ヴィェトナム
CM	カメルーン	KE	ケニア	NZ	ニュー・ジーランド	YU	ユーゴスラビア
CN	中国	KG	キルギスタン	PL	ポーランド	ZW	ジンバブエ
CU	キューバ	KP	朝鮮民主主義人民共和国	PT	ポルトガル		
CZ	チェッコ共和国	KR	大韓民国	RO	ルーマニア		
DE	ドイツ	KZ	カザフスタン	RU	ロシア連邦		
DK	デンマーク	LC	セントルシア	SD	スーダン		
EE	エストニア	LI	リヒテンシュタイン				