FIG. 1

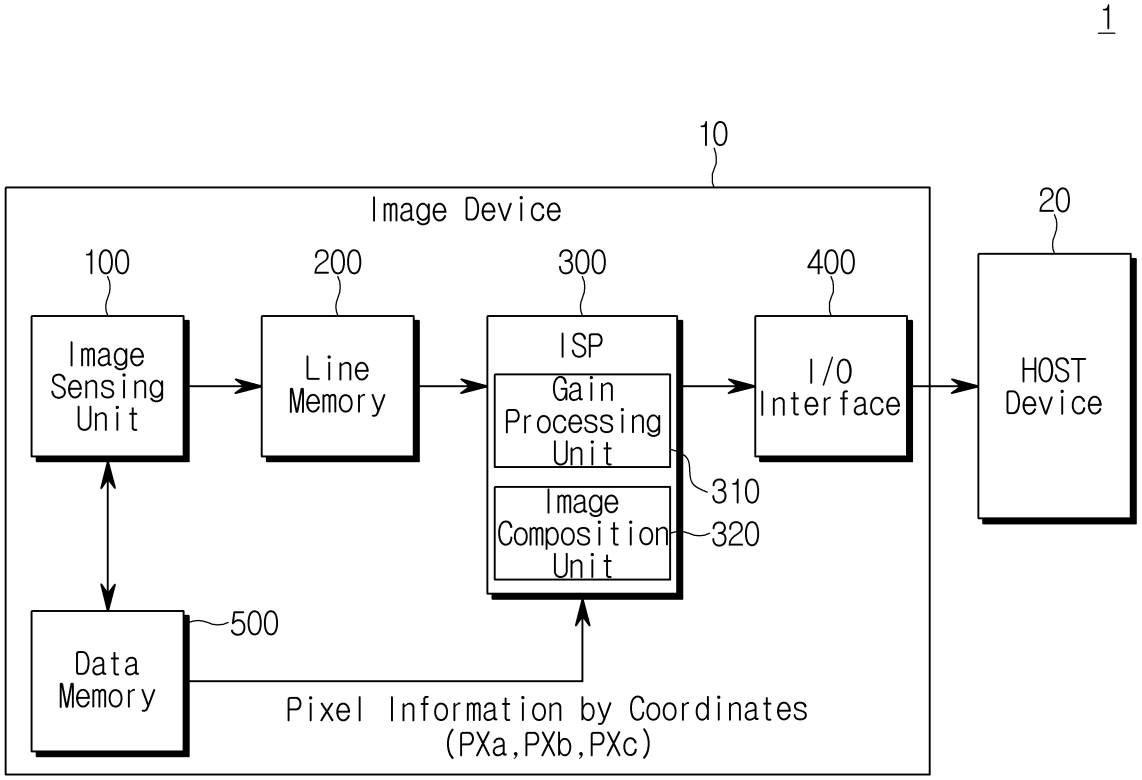
1
10
Image Device
20
100
200
300
400
Image Sensing Unit
Line Memory
ISP
Gain Processing Unit
310
Image Composition Unit
320
I/O Interface
HOST Device
500
Data Memory
Pixel Information by Coordinates
(PXa,PXb,PXc)

FIG. 2

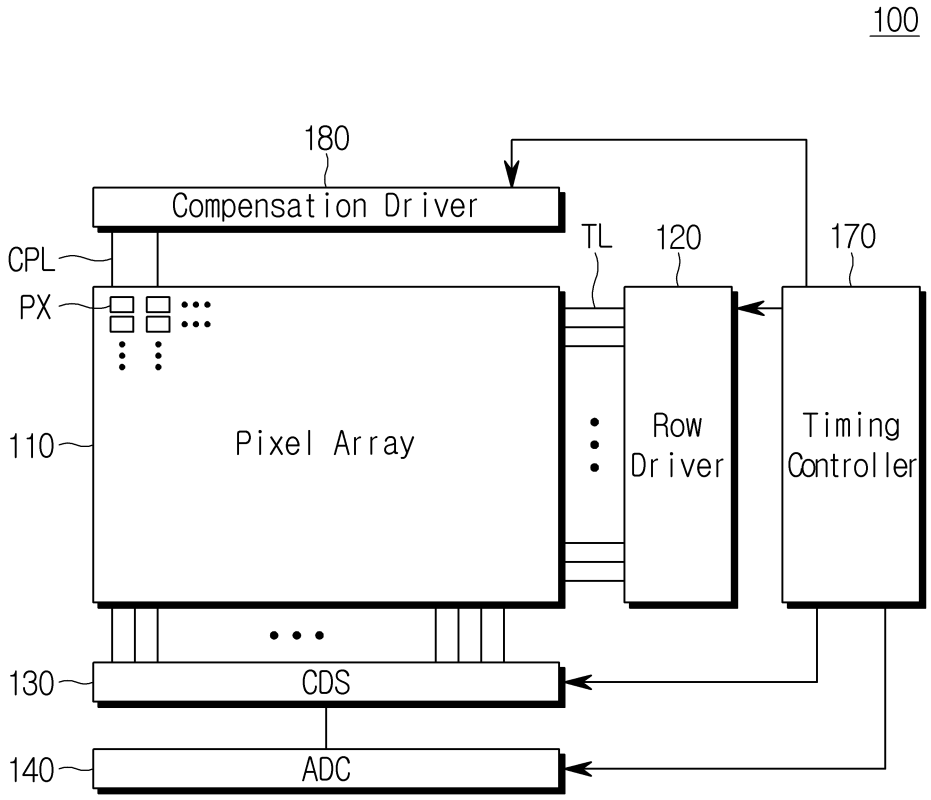
100
180
Compensation Driver
CPL
PX
TL
120
170
110
Pixel Array
Row Driver
Timing Controller
130
CDS
140
ADC

FIG. 3

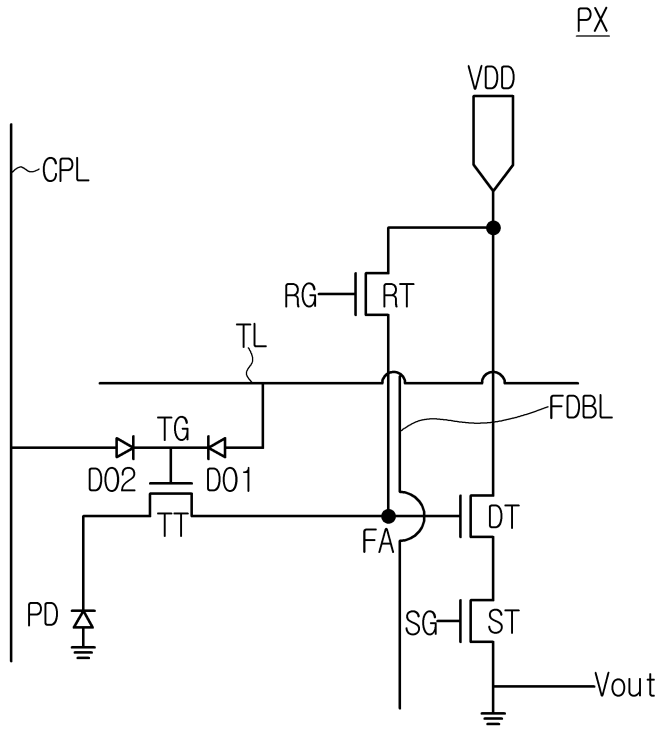

FIG. 4

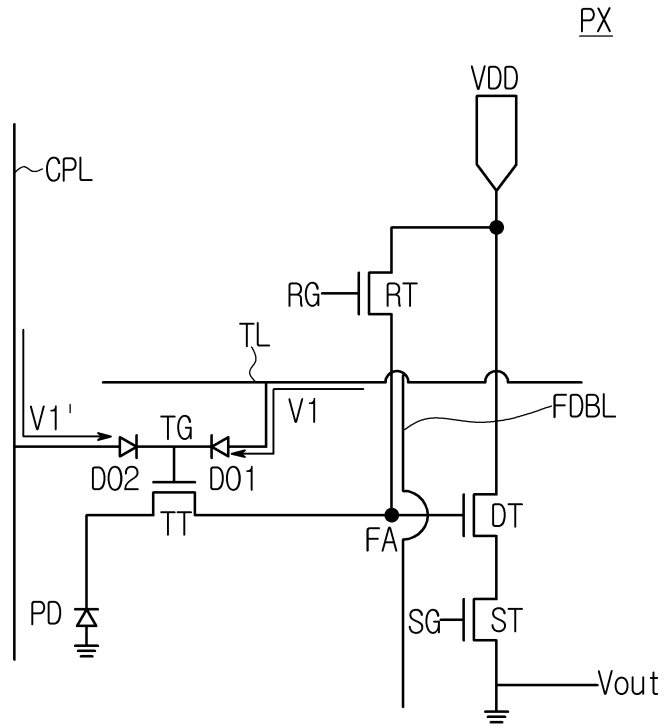

FIG. 5

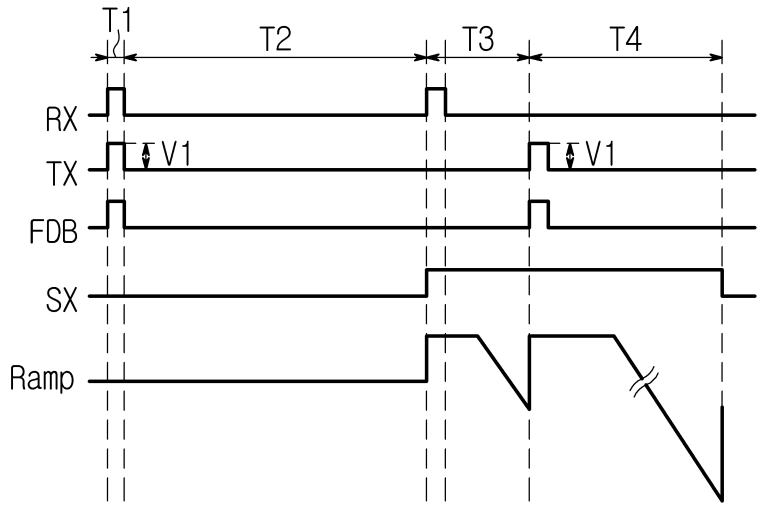

FIG. 6

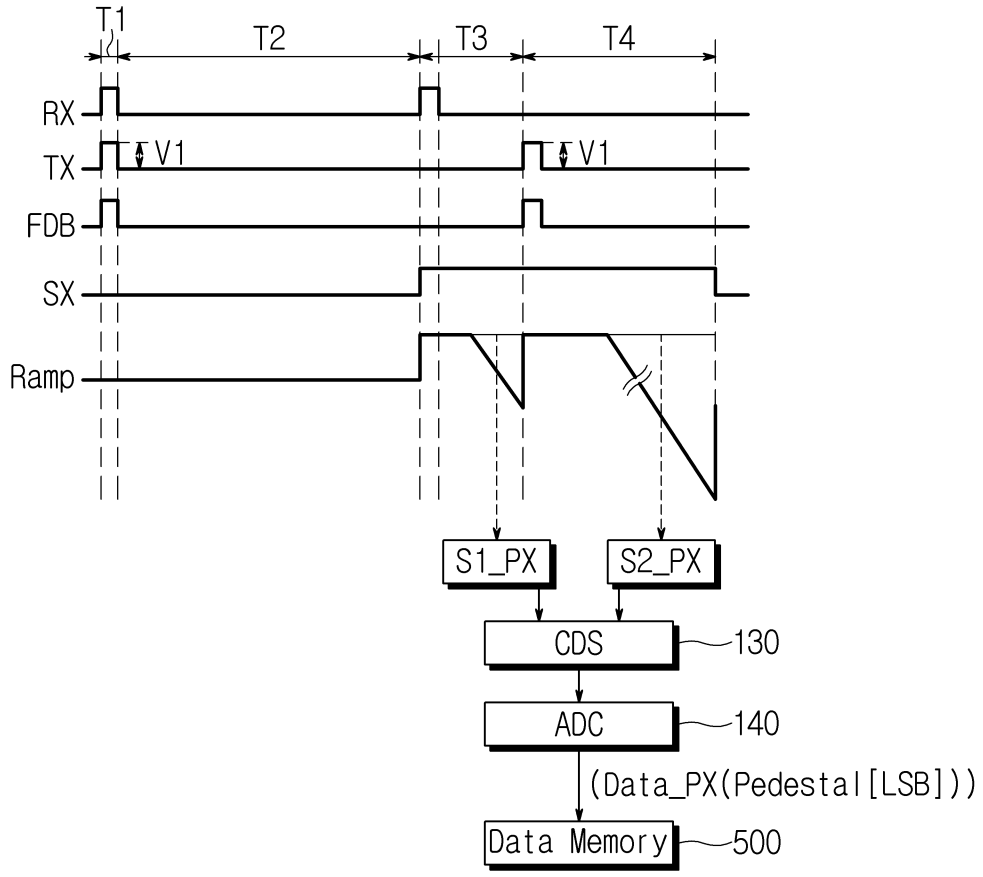
T1
T2
T3
T4
RX
TX
V1
V1
FDB
SX
Ramp
S1_PX
S2_PX
CDS
130
ADC
140
(Data_PX(Pedestal[LSB]))
Data Memory
500

FIG. 7

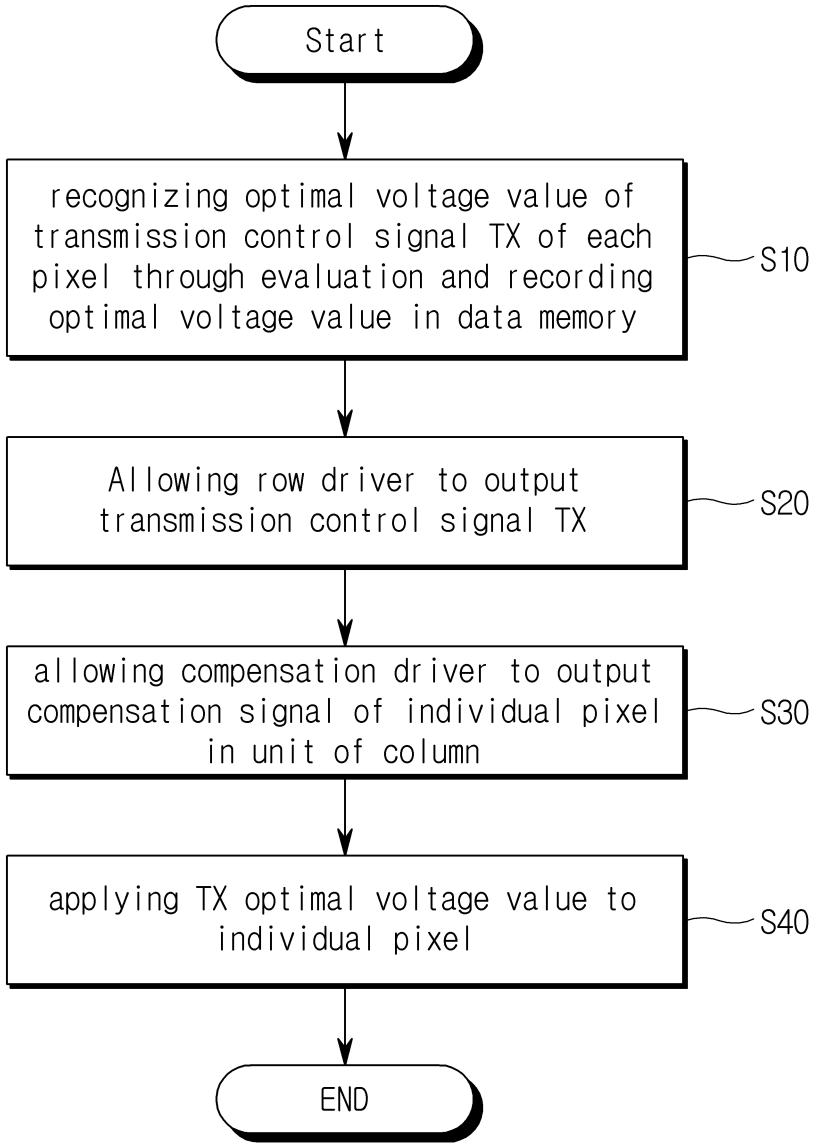
Start
recognizing optimal voltage value of transmission control signal TX of each pixel through evaluation and recording optimal voltage value in data memory
S10
Allowing row driver to output transmission control signal TX
S20
allowing compensation driver to output compensation signal of individual pixel in unit of column
S30
applying TX optimal voltage value to individual pixel
S40
END

FIG. 8

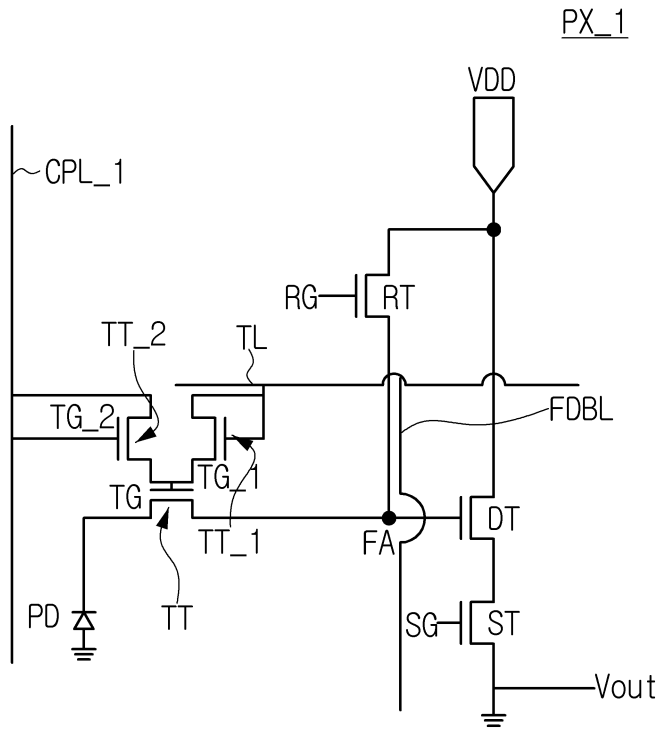
PX_1
VDD
CPL_1
RG
RT
TT_2
TL
FDBL
TG_2
TG_1
TG
DT
TT_1
FA
PD
TT
SG
ST
Vout

FIG. 9

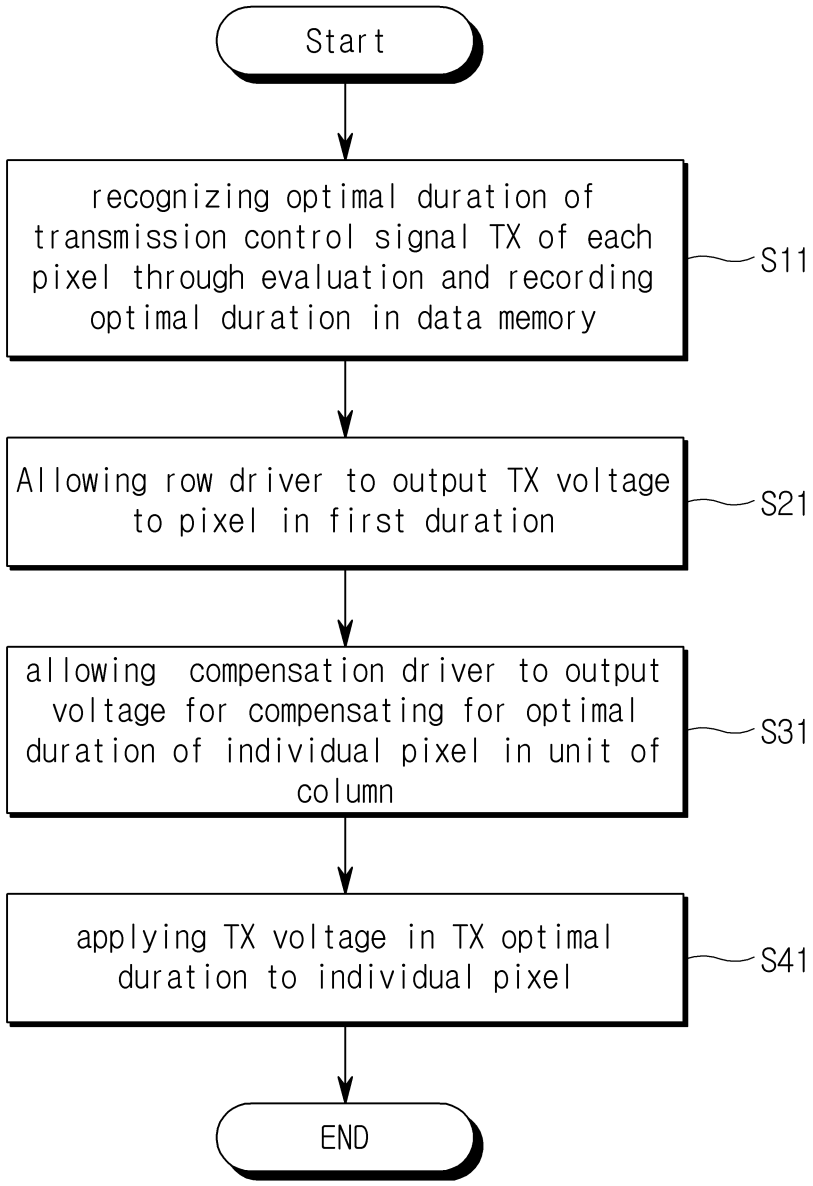
Start
recognizing optimal duration of transmission control signal TX of each pixel through evaluation and recording optimal duration in data memory
S11
Allowing row driver to output TX voltage to pixel in first duration
S21
allowing compensation driver to output voltage for compensating for optimal duration of individual pixel in unit of column
S31
applying TX voltage in TX optimal duration to individual pixel
S41
END

FIG. 10

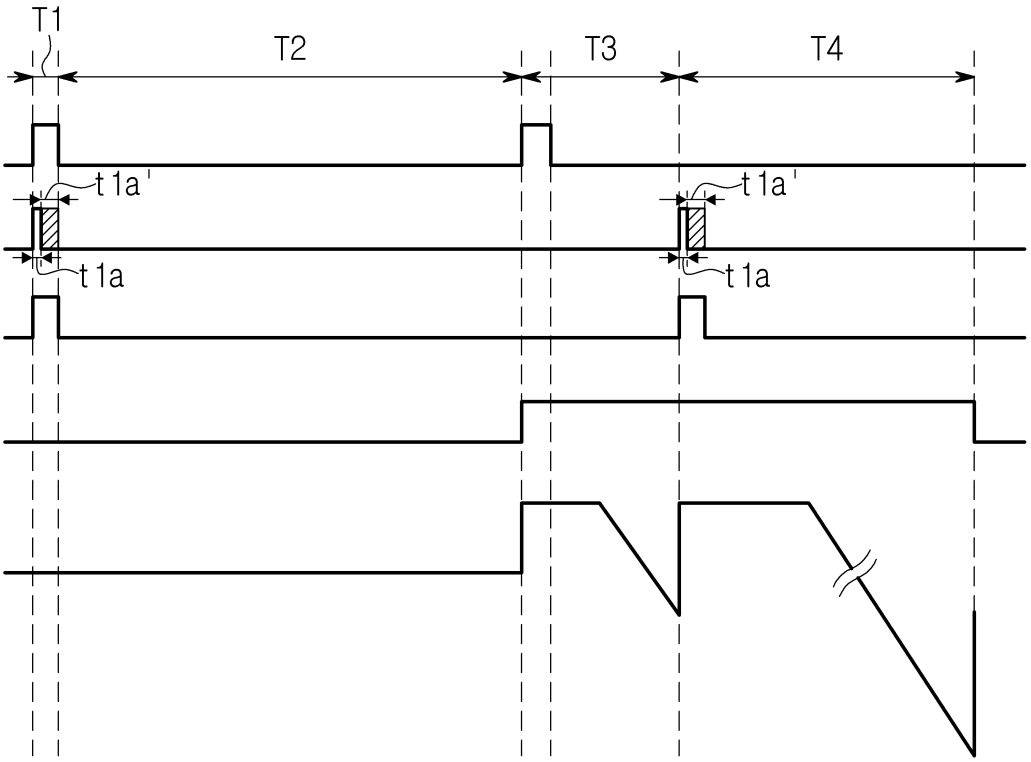

FIG. 11

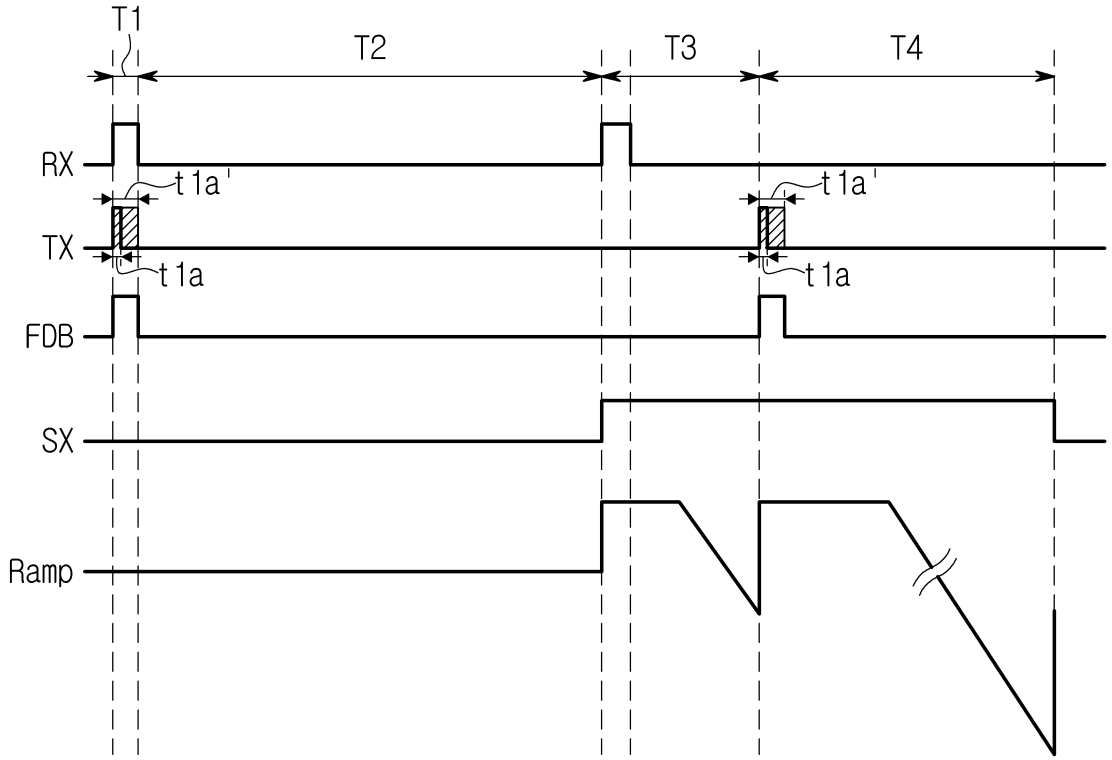

FIG. 12

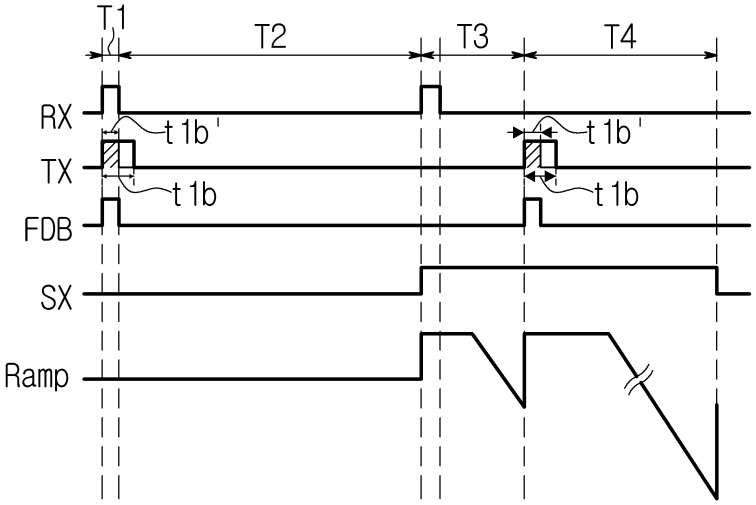

FIG. 13

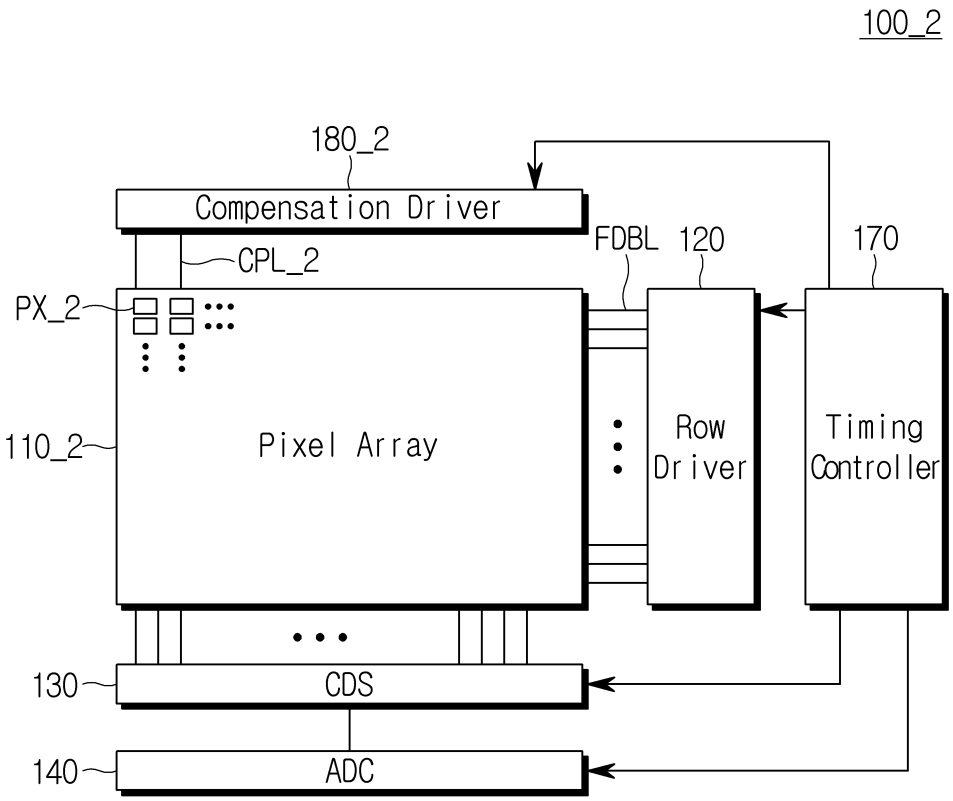
100_2
180_2
Compensation Driver
CPL_2
FDBL
120
170
PX_2
110_2
Pixel Array
Row Driver
Timing Controller
130
CDS
140
ADC

FIG. 14

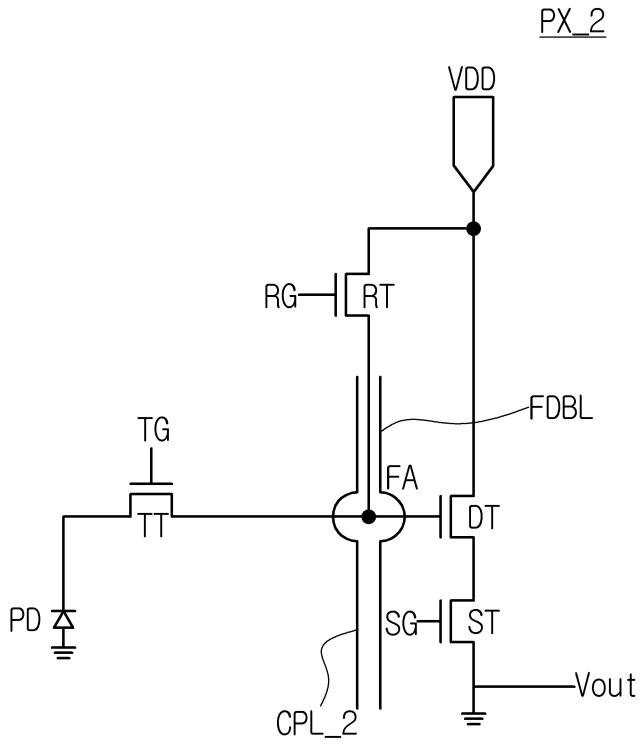

FIG. 15

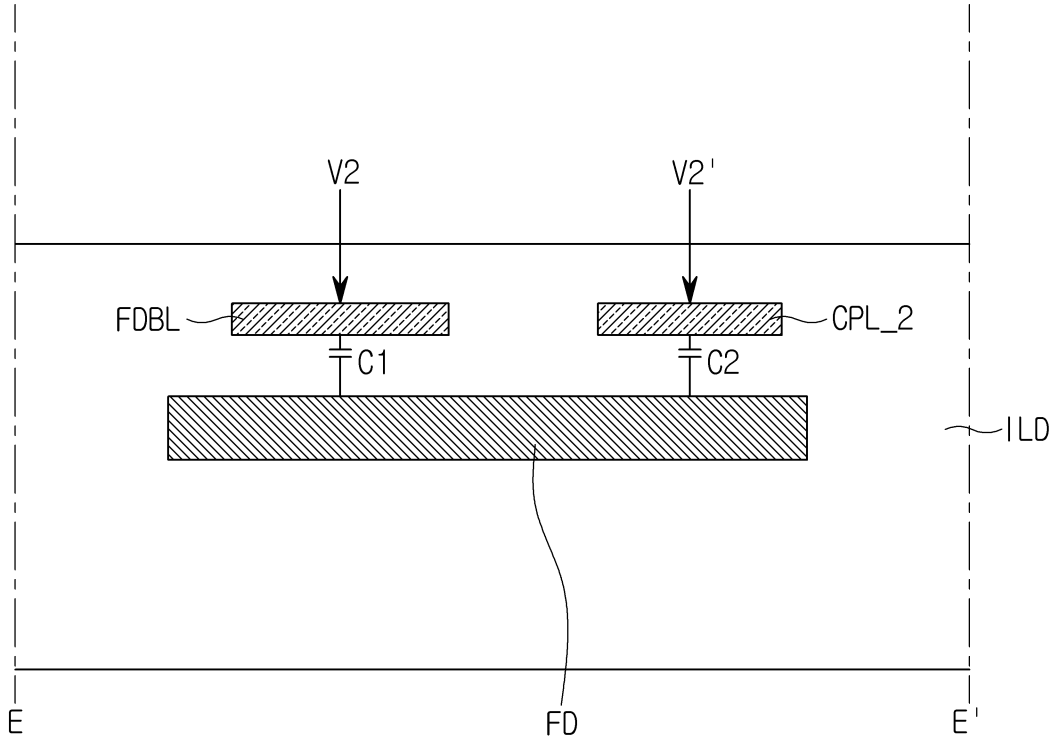

FIG. 16

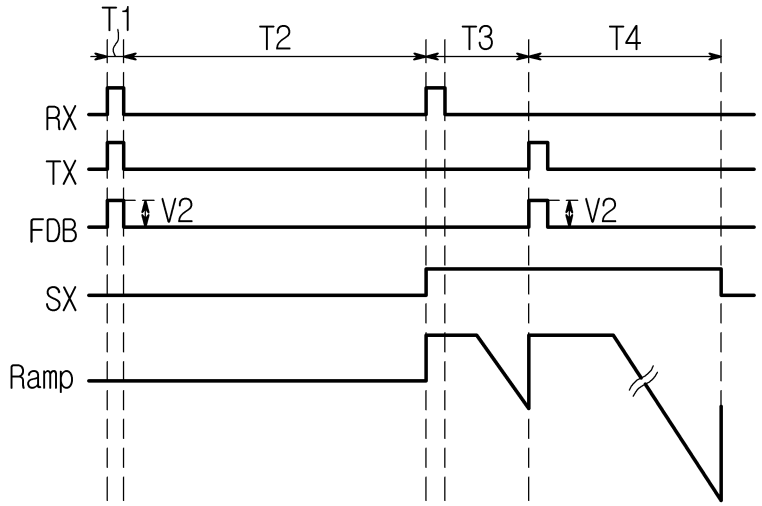

FIG. 17

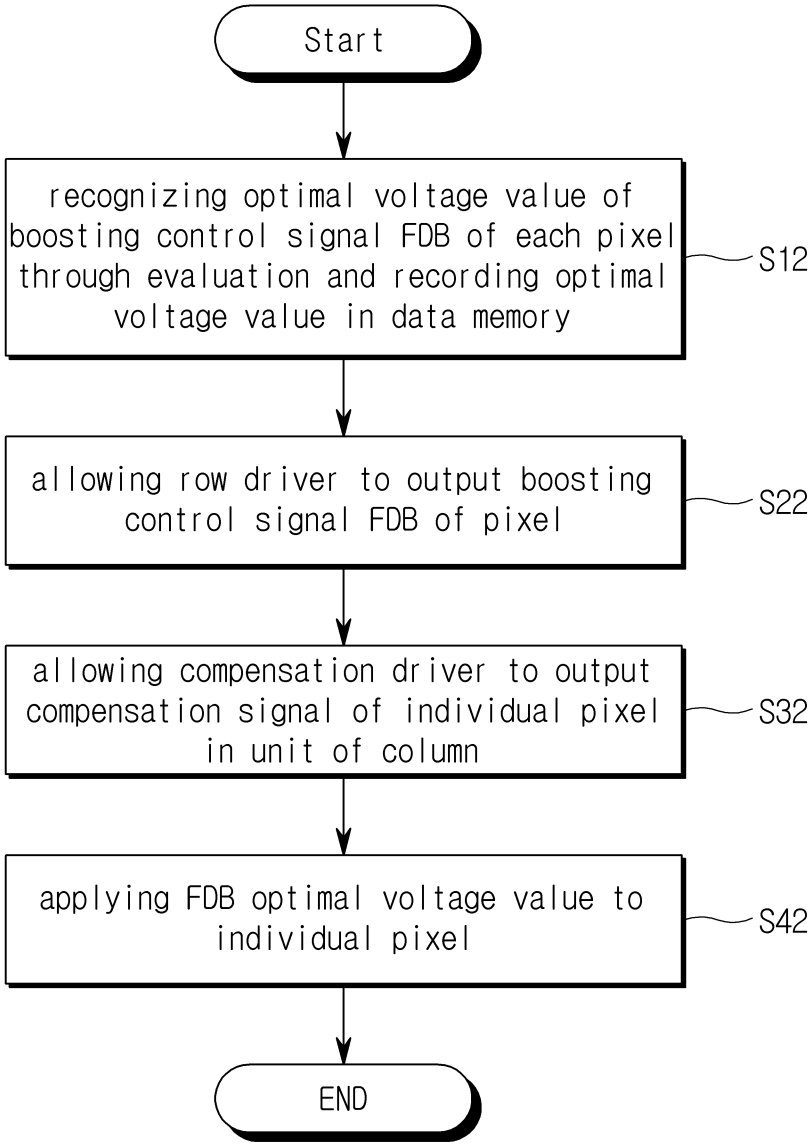
Start
recognizing optimal voltage value of boosting control signal FDB of each pixel through evaluation and recording optimal voltage value in data memory
S12
allowing row driver to output boosting control signal FDB of pixel
S22
allowing compensation driver to output compensation signal of individual pixel in unit of column
S32
applying FDB optimal voltage value to individual pixel
S42
END

FIG. 18

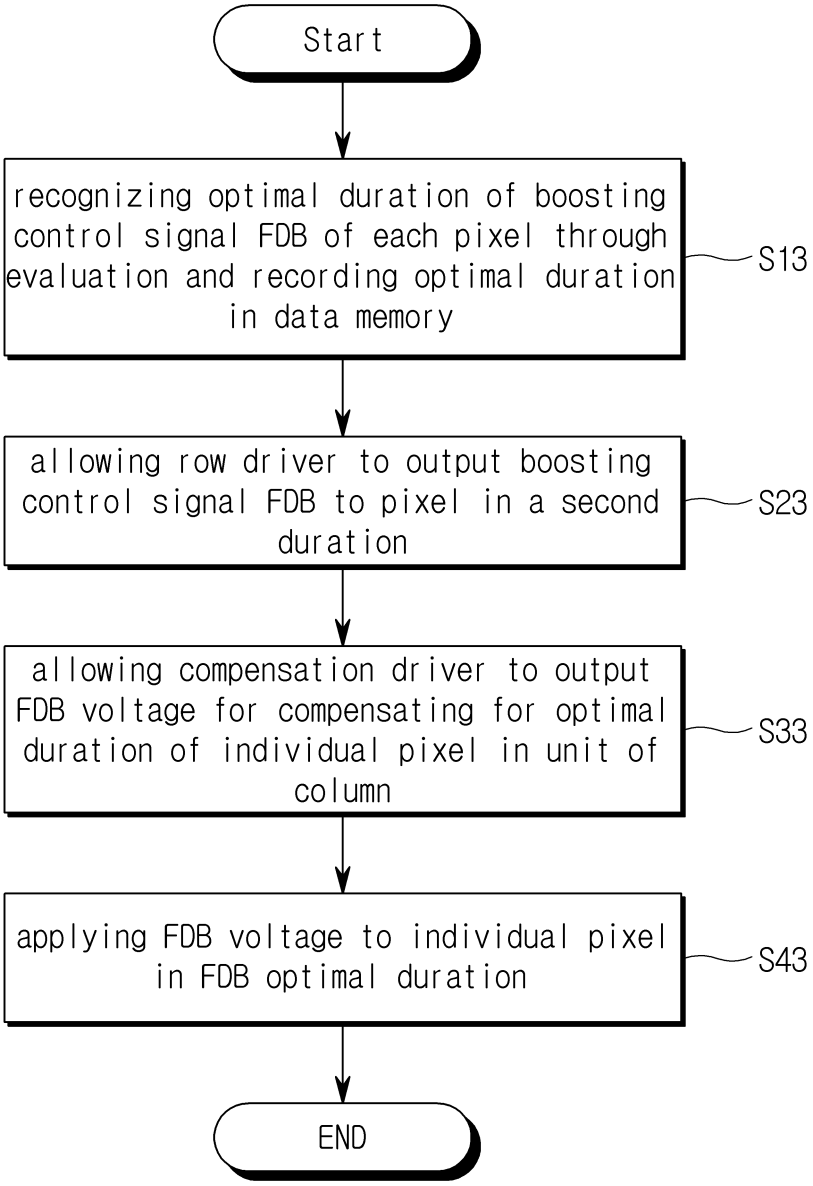
Start
recognizing optimal duration of boosting control signal FDB of each pixel through evaluation and recording optimal duration in data memory
S13
allowing row driver to output boosting control signal FDB to pixel in a second duration
S23
allowing compensation driver to output FDB voltage for compensating for optimal duration of individual pixel in unit of column
S33
applying FDB voltage to individual pixel in FDB optimal duration
S43
END

FIG. 19

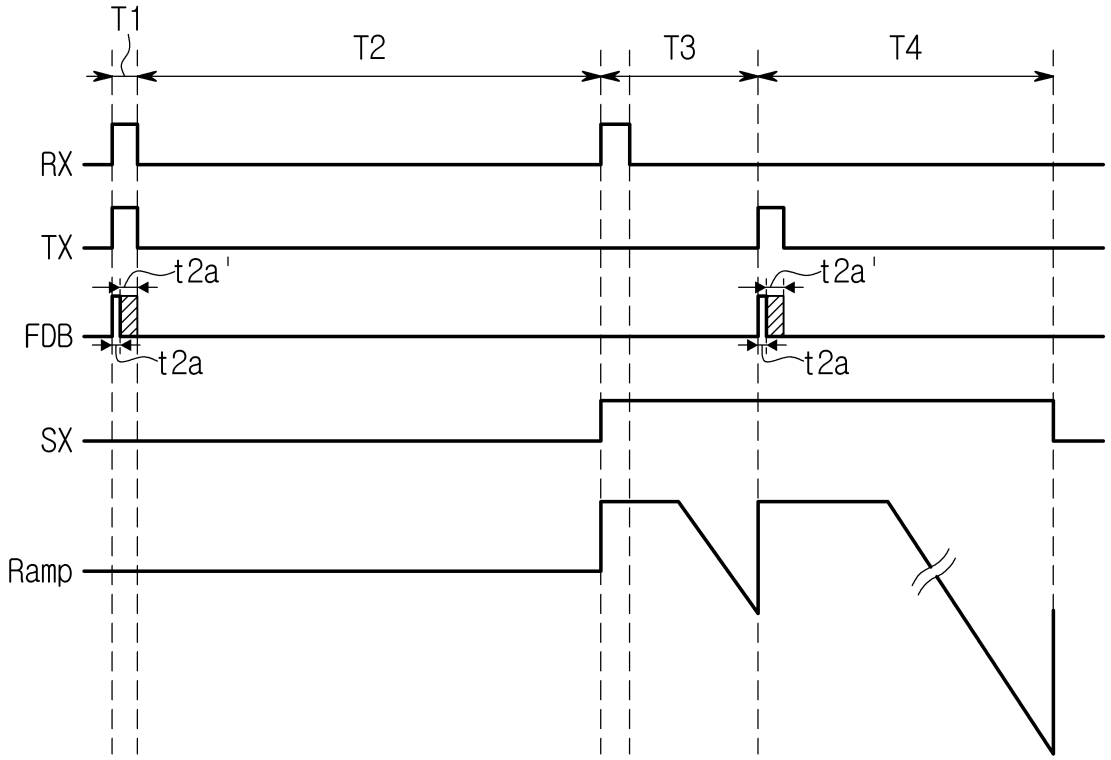

FIG. 20

