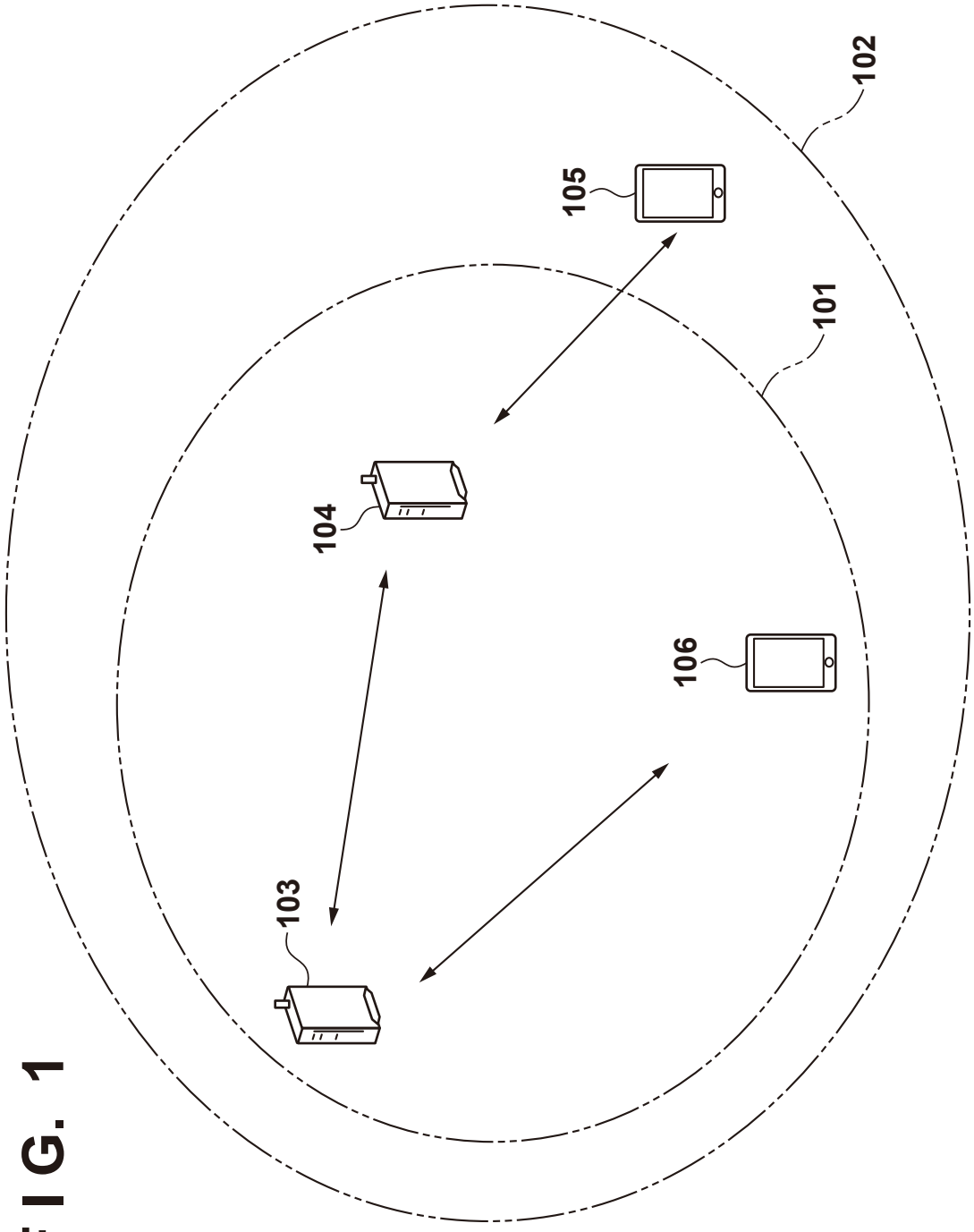

FIG. 1

FIG. 2

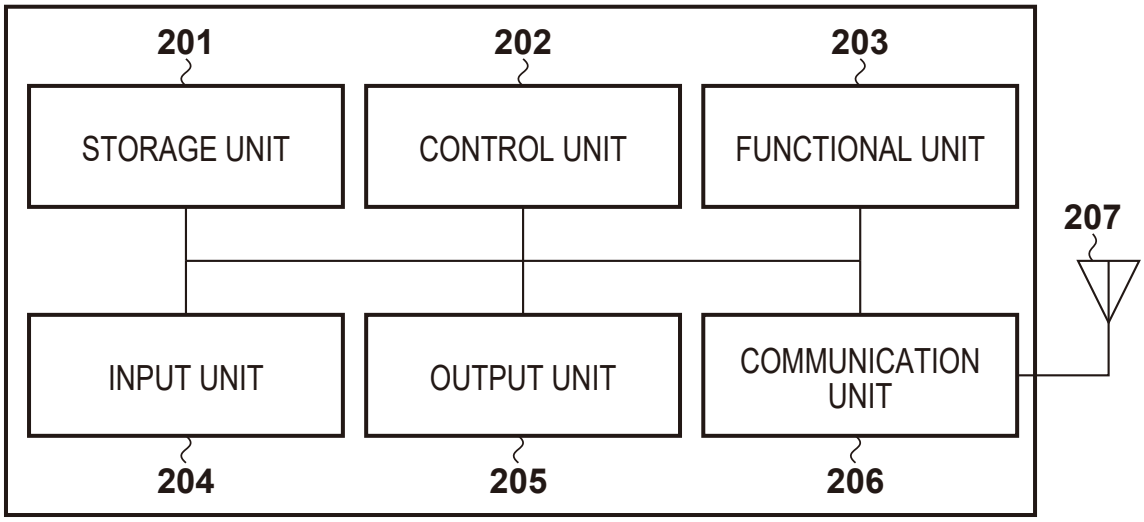
201
202
203
STORAGE UNIT
CONTROL UNIT
FUNCTIONAL UNIT
207
INPUT UNIT
OUTPUT UNIT
COMMUNICATION UNIT
204
205
206

FIG. 3

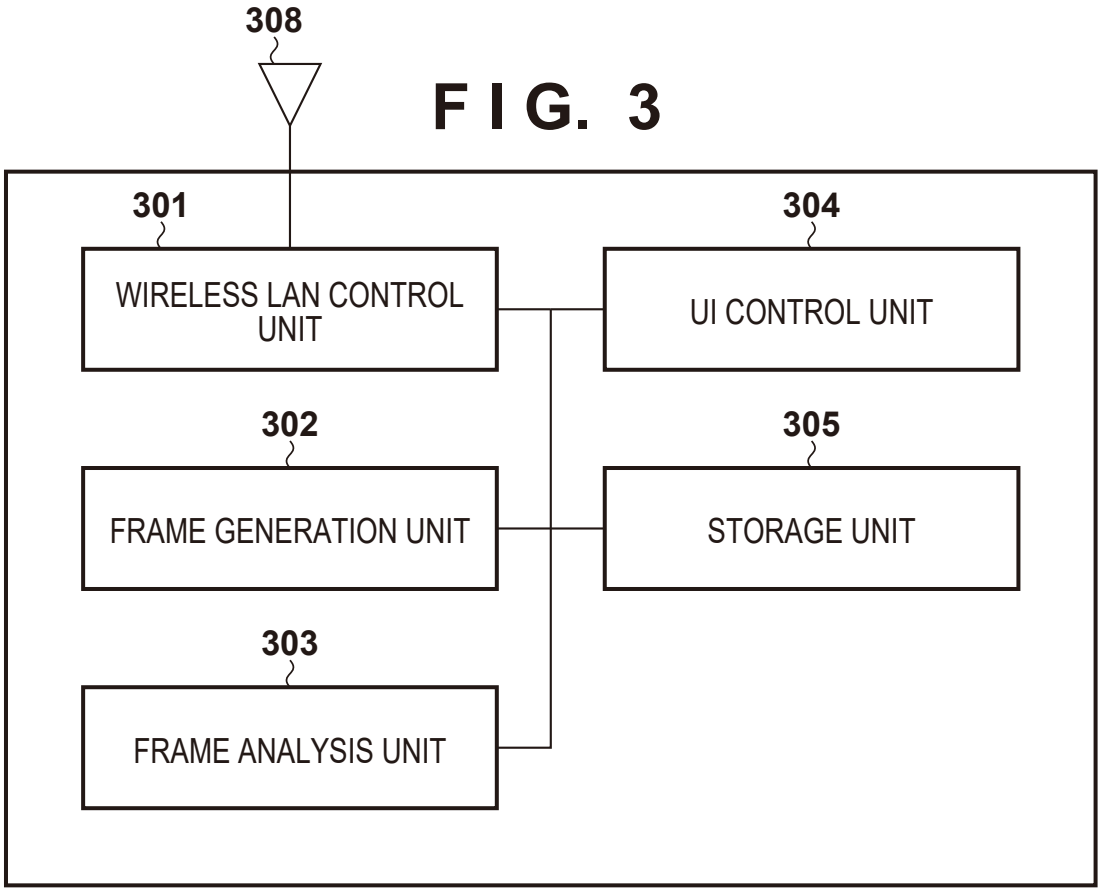
308
301
304
WIRELESS LAN CONTROL UNIT
UI CONTROL UNIT
302
305
FRAME GENERATION UNIT
STORAGE UNIT
303
FRAME ANALYSIS UNIT

FIG. 4

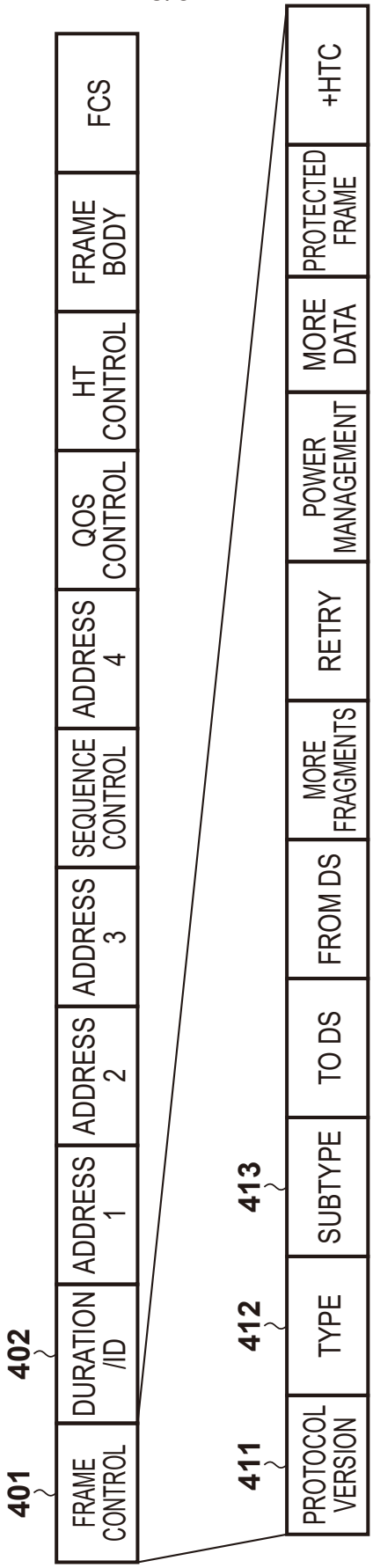
401
402
411
412
413
FRAME CONTROL
DURATION /ID
ADDRESS 1
ADDRESS 2
ADDRESS 3
SEQUENCE CONTROL
ADDRESS 4
QOS CONTROL
HT CONTROL
FRAME BODY
FCS
PROTOCOL VERSION
TYPE
SUBTYPE
TO DS
FROM DS
MORE FRAGMENTS
RETRY
POWER MANAGEMENT
MORE DATA
PROTECTED FRAME
+HTC

FIG. 5A

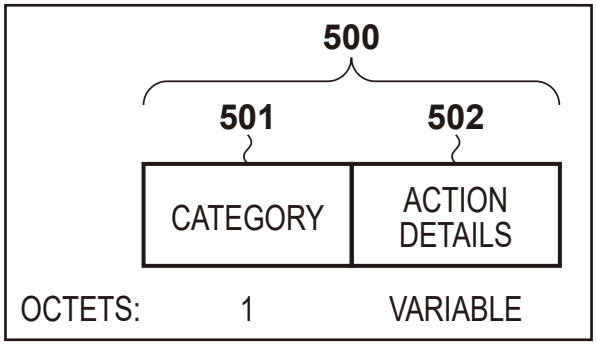

FIG. 5B

ACTION DETAILS

ORDER	INFORMATION	
0	CATEGORY(=38)	501
1	C-TDMA ACTION(=0)	511
2	PROVISIONAL TXOP NOTIFICATION ELEMENT	512

502

FIG. 5C

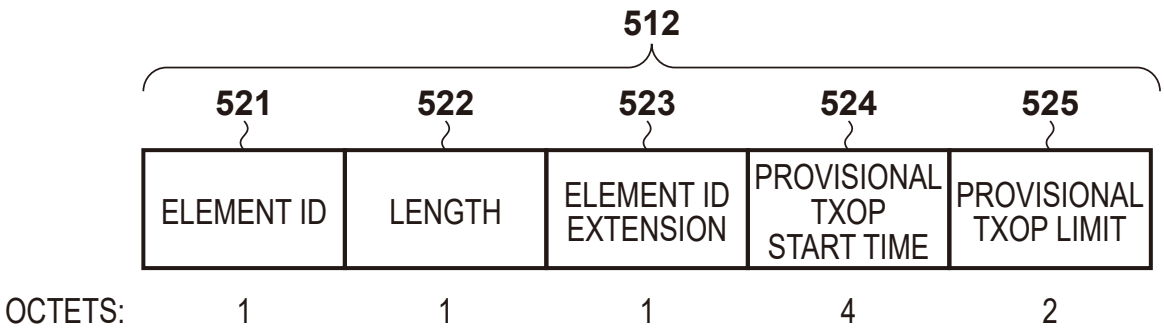

FIG. 6

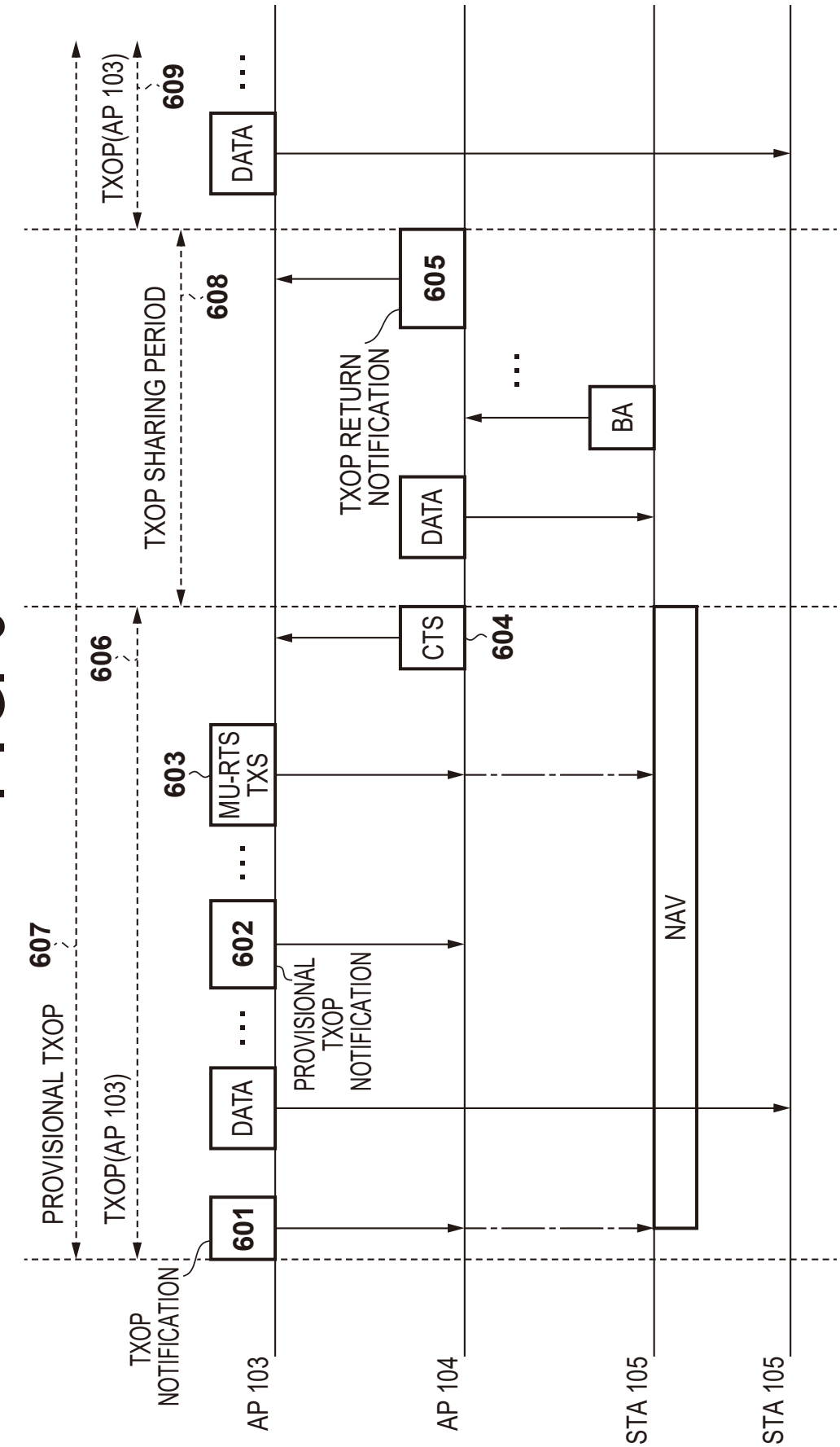
PROVISIONAL TXOP
607
TXOP(AP 103)
606
TXOP SHARING PERIOD
608
TXOP(AP 103)
609
TXOP NOTIFICATION
601
DATA
602
PROVISIONAL TXOP NOTIFICATION
MU-RTS TXS
603
CTS
604
DATA
605
TXOP RETURN NOTIFICATION
BA
DATA
NAV
AP 103
AP 104
STA 105
STA 105

FIG. 7

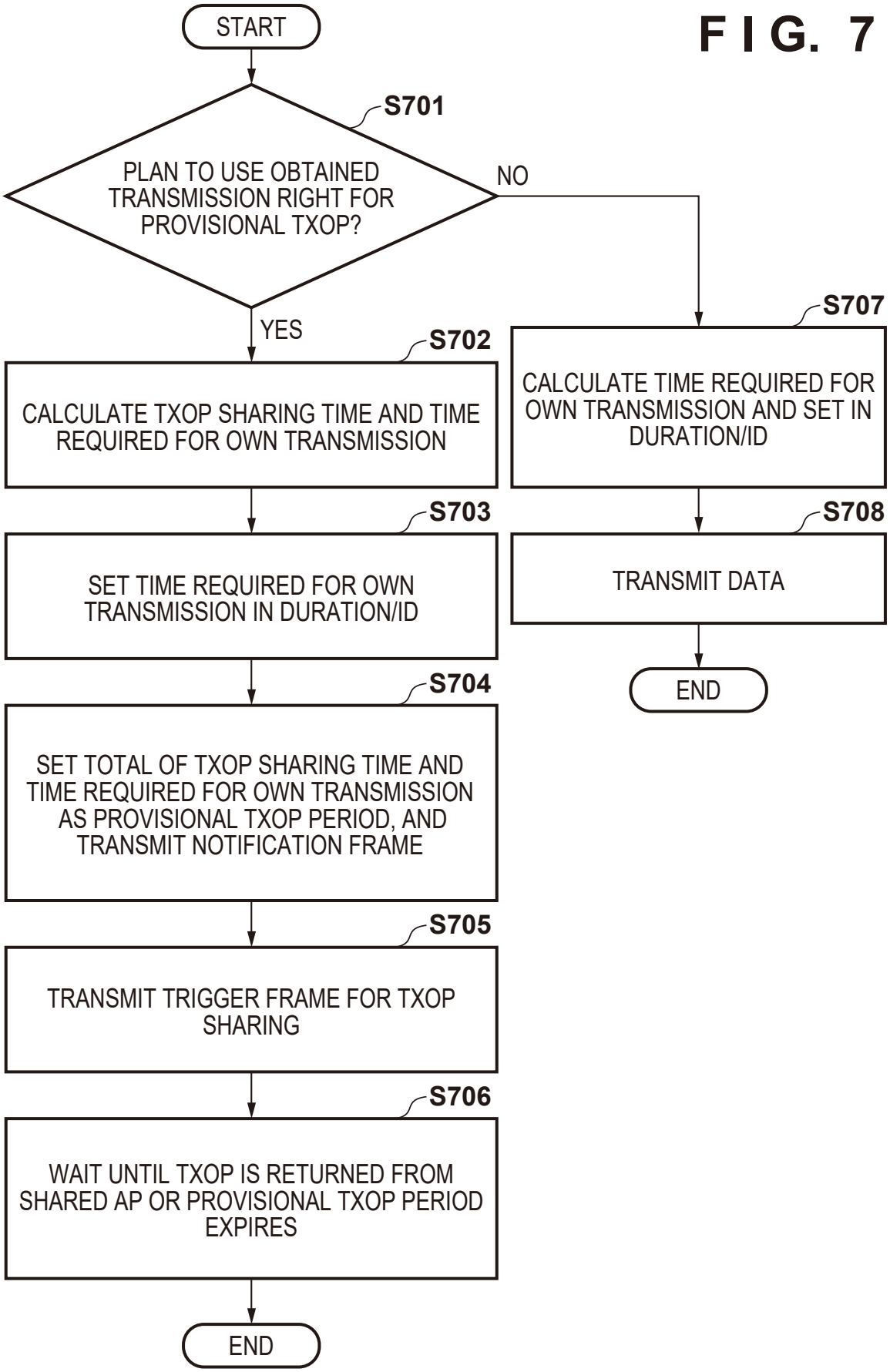
START
S701
PLAN TO USE OBTAINED TRANSMISSION RIGHT FOR PROVISIONAL TXOP?
NO
YES
S702
CALCULATE TXOP SHARING TIME AND TIME REQUIRED FOR OWN TRANSMISSION
S703
SET TIME REQUIRED FOR OWN TRANSMISSION IN DURATION/ID
S704
SET TOTAL OF TXOP SHARING TIME AND TIME REQUIRED FOR OWN TRANSMISSION AS PROVISIONAL TXOP PERIOD, AND TRANSMIT NOTIFICATION FRAME
S705
TRANSMIT TRIGGER FRAME FOR TXOP SHARING
S706
WAIT UNTIL TXOP IS RETURNED FROM SHARED AP OR PROVISIONAL TXOP PERIOD EXPIRES
END
S707
CALCULATE TIME REQUIRED FOR OWN TRANSMISSION AND SET IN DURATION/ID
S708
TRANSMIT DATA
END

FIG. 8

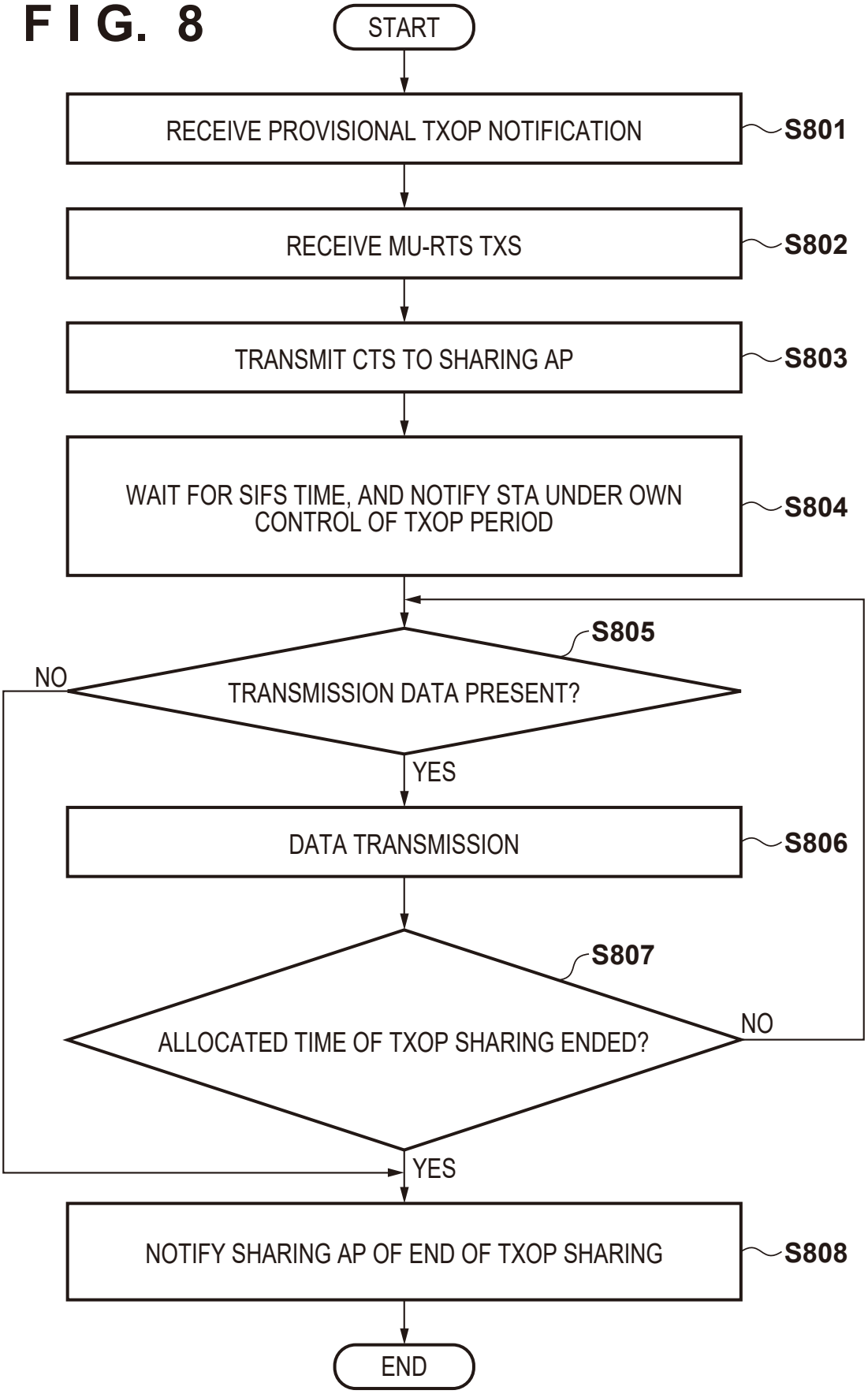
START
RECEIVE PROVISIONAL TXOP NOTIFICATION
S801
RECEIVE MU-RTS TXS
S802
TRANSMIT CTS TO SHARING AP
S803
WAIT FOR SIFS TIME, AND NOTIFY STA UNDER OWN CONTROL OF TXOP PERIOD
S804
S805
TRANSMISSION DATA PRESENT?
NO
YES
DATA TRANSMISSION
S806
S807
ALLOCATED TIME OF TXOP SHARING ENDED?
NO
YES
NOTIFY SHARING AP OF END OF TXOP SHARING
S808
END

FIG. 9A

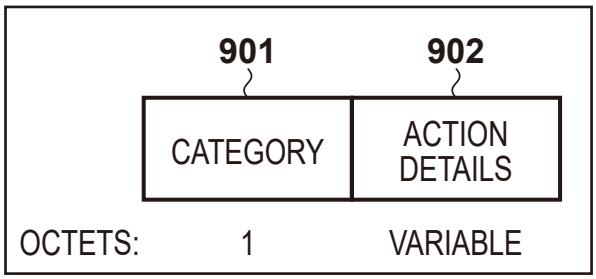

FIG. 9B

ORDER	INFORMATION	
0	CATEGORY(=1)	901
1	QOS ACTION(=9)	911
2	PROVISIONAL TXOP INFORMATION	912

902

FIG. 9C

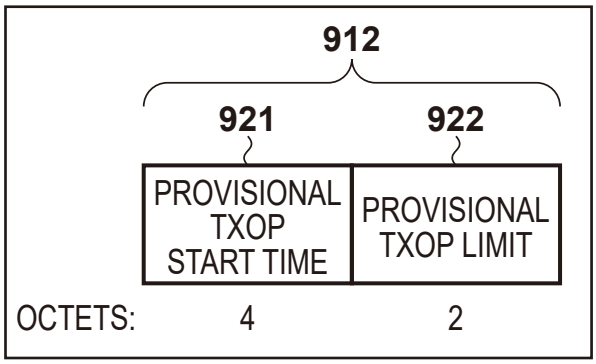

FIG. 10A

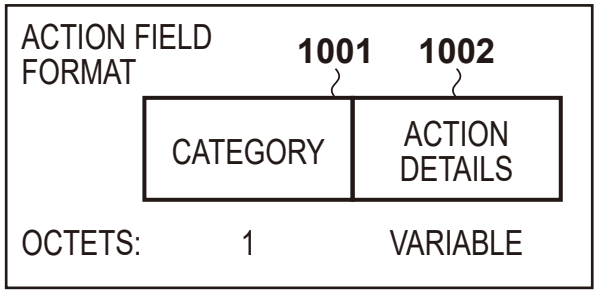

FIG. 10B

ACTION DETAILS

ORDER	INFORMATION
0	CATEGORY(=38)
1	C-TDMA ACTION(=1)