(12) INTERNATIONAL APPLICATION PUBLISHED UNDER THE PATENT COOPERATION TREATY (PCT)

CORRECTED VERSION

(19) World Intellectual Property Organization
International Bureau

(43) International Publication Date
16 August 2007 (16.08.2007)

PCT

(10) International Publication Number
WO 2007/092853 A3

(51) International Patent Classification:
A61F 2/14 (2006.01) *A61F 9/01* (2006.01)
A61F 2/16 (2006.01)

(21) International Application Number:
PCT/US2007/061702

(22) International Filing Date: 6 February 2007 (06.02.2007)

(25) Filing Language: English

(26) Publication Language: English

(30) Priority Data:
11/349,295 7 February 2006 (07.02.2006) US

(71) Applicant *(for all designated States except US)*: **VISION CRC LIMITED** [AU/AU]; Gate 14, Barker Street, University of New South Wales, Level 4, Rupert Myers Building, Sydney, New South Wales 2052 (AU).

(72) Inventor: **GREEMAN, Nelson** (deceased).

(72) Inventors; and

(75) Inventors/Applicants *(for US only)*: **SMITH, Earl, Leo, III** [US/US]; 2009 Harvard Street, Houston, Texas 77008 (US). **HO, Arthur** [AU/AU]; Unit 12, 50 Fern Street, Clovelly, New South Wales 2031 (AU). **HOLDEN, Brien, Anthony** [AU/AU]; 19 Leonard Avenue, Kingsford, New South Wales 2032 (AU). **GREEMAN, Patsy** [US/US]; 6 Nakita Drive, San Antonio, Texas 78248 (US).

(74) Agents: **PRATT, John, S.** et al.; Kilpatrick Stockton Llp, 1100 Peachtree Street, Suite 2800, Atlanta, Georgia 30309 (US).

(81) Designated States *(unless otherwise indicated, for every kind of national protection available)*: AE, AG, AL, AM, AT, AU, AZ, BA, BB, BG, BR, BW, BY, BZ, CA, CH, CN, CO, CR, CU, CZ, DE, DK, DM, DZ, EC, EE, EG, ES, FI, GB, GD, GE, GH, GM, GT, HN, HR, HU, ID, IL, IN, IS, JP, KE, KG, KM, KN, KP, KR, KZ, LA, LC, LK, LR, LS, LT, LU, LV, LY, MA, MD, MG, MK, MN, MW, MX, MY, MZ, NA, NG, NI, NO, NZ, OM, PG, PH, PL, PT, RO, RS, RU, SC, SD, SE, SG, SK, SL, SM, SV, SY, TJ, TM, TN, TR, TT, TZ, UA, UG, US, UZ, VC, VN, ZA, ZM, ZW.

(84) Designated States *(unless otherwise indicated, for every kind of regional protection available)*: ARIPO (BW, GH, GM, KE, LS, MW, MZ, NA, SD, SL, SZ, TZ, UG, ZM, ZW), Eurasian (AM, AZ, BY, KG, KZ, MD, RU, TJ, TM), European (AT, BE, BG, CH, CY, CZ, DE, DK, EE, ES, FI, FR, GB, GR, HU, IE, IS, IT, LT, LU, LV, MC, NL, PL, PT, RO, SE, SI, SK, TR), OAPI (BF, BJ, CF, CG, CI, CM, GA, GN, GQ, GW, ML, MR, NE, SN, TD, TG).

Published:
— *with international search report*

[Continued on next page]

(54) Title: METHODS AND APPARATUSES FOR ALTERING RELATIVE CURVATURE OF FIELD AND POSITIONS OF PERIPHERAL, OFF-AXIS FOCAL POSITIONS

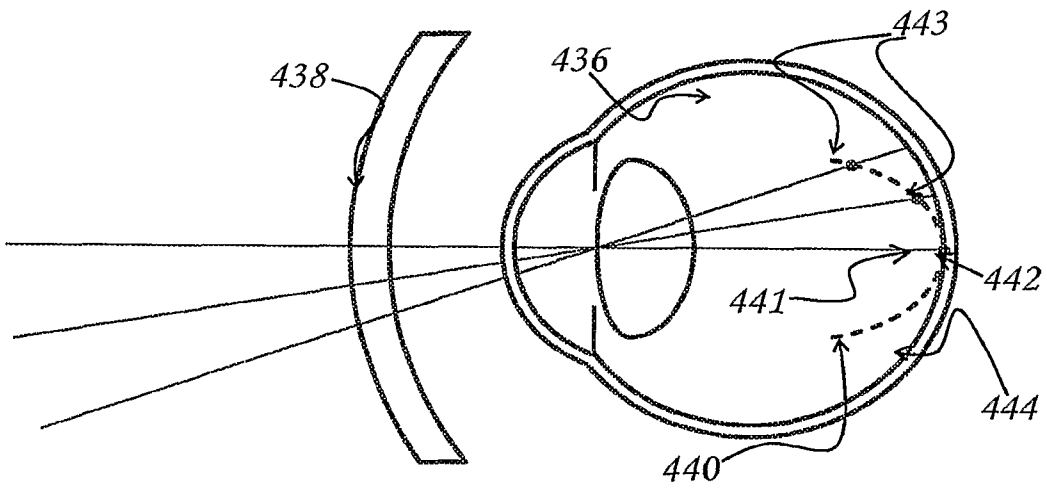

(57) Abstract: A method and apparatus are disclosed for controlling optical aberrations to alter relative curvature of field by providing ocular apparatuses, systems and methods comprising a predetermined corrective factor to produce at least one substantially corrective stimulus for repositioning peripheral, off-axis, focal points relative to the central, on-axis or axial focal point while maintaining the positioning of the central, on-axis or axial focal point on the retina. The invention will be used to provide continuous, useful clear visual images while simultaneously retarding or abating the progression of myopia or hypermetropia.

WO 2007/092853 A3

(88) Date of publication of the international search report:
4 October 2007

(48) Date of publication of this corrected version:
22 November 2007

(15) Information about Correction:
see PCT Gazette No. 47/2007 of 22 November 2007

For two-letter codes and other abbreviations, refer to the "Guidance Notes on Codes and Abbreviations" appearing at the beginning of each regular issue of the PCT Gazette.