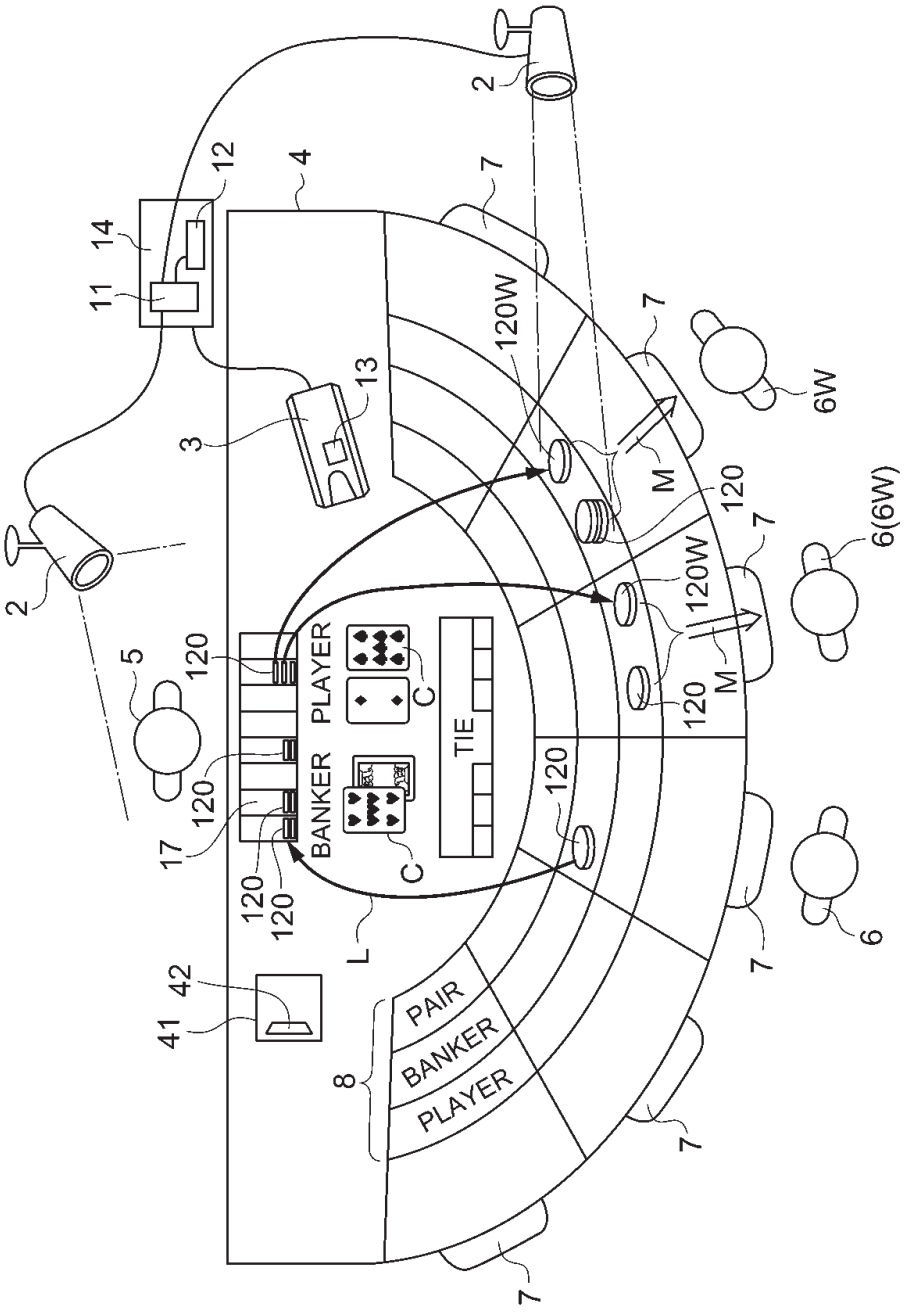
2
4
12
14
11
7
120W
13
3
6W
M
120
6(6W)
5
PLAYER
BANKER
TIE
C
17
L
6
42
41
8
PAIR
BANKER
PLAYER

Fig.1

Fig.2A

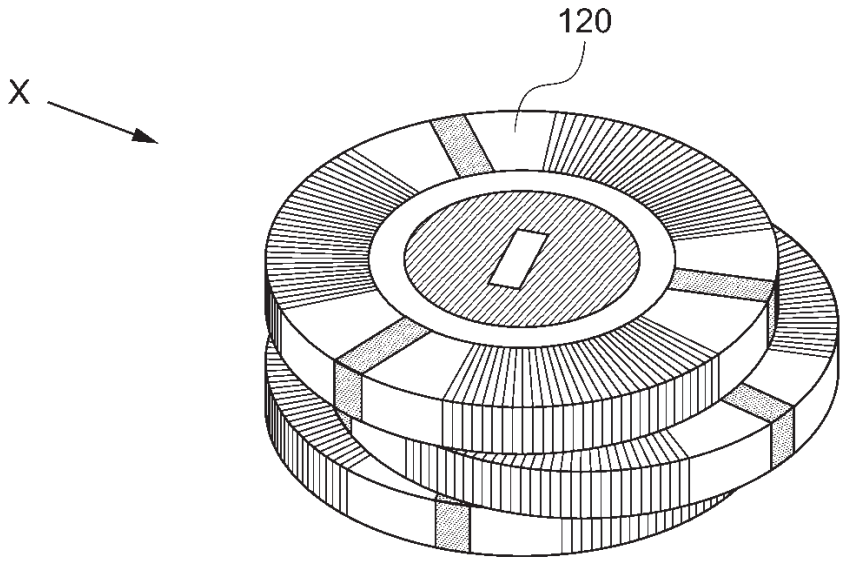

Fig.2B

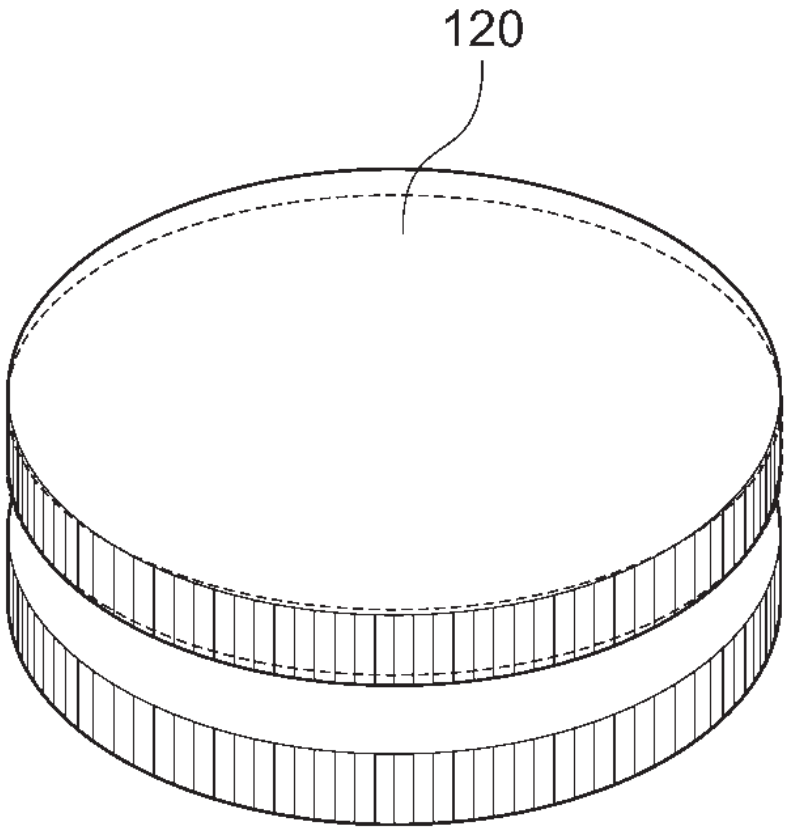

Fig.3



Fig.4A

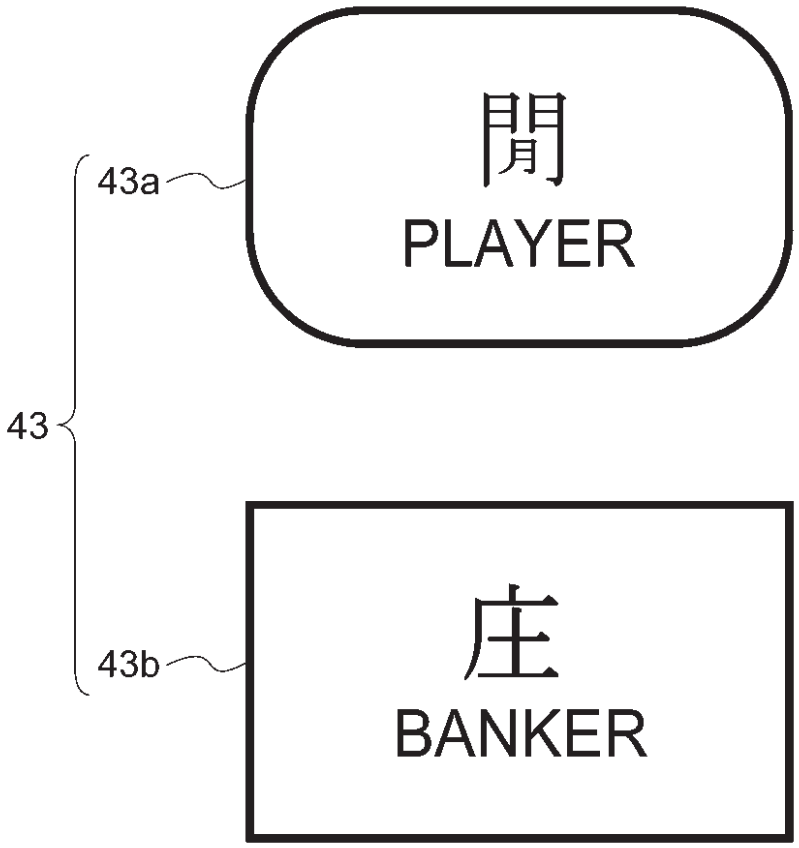

Fig.4B

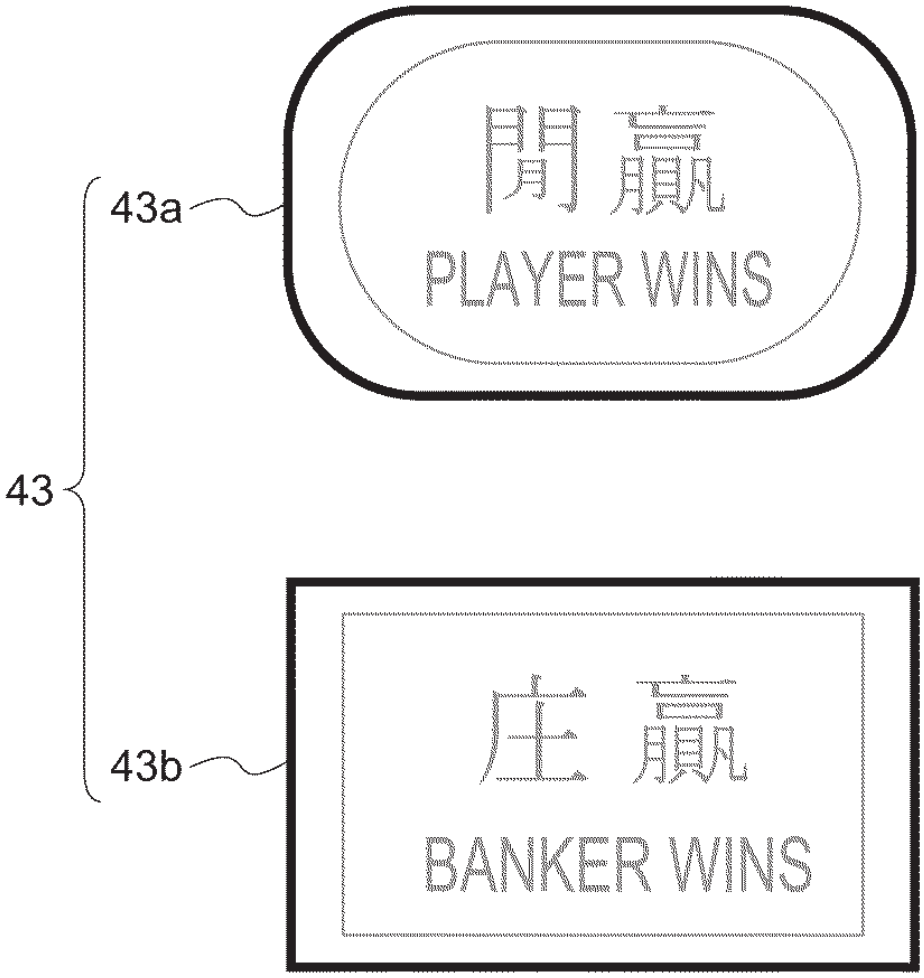

Fig.5

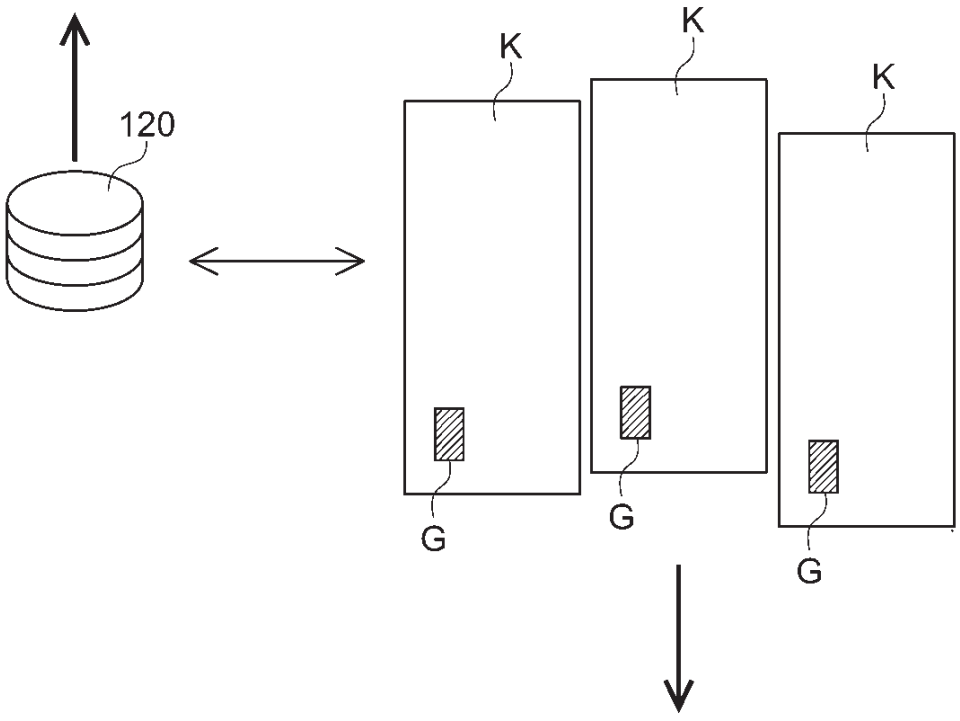

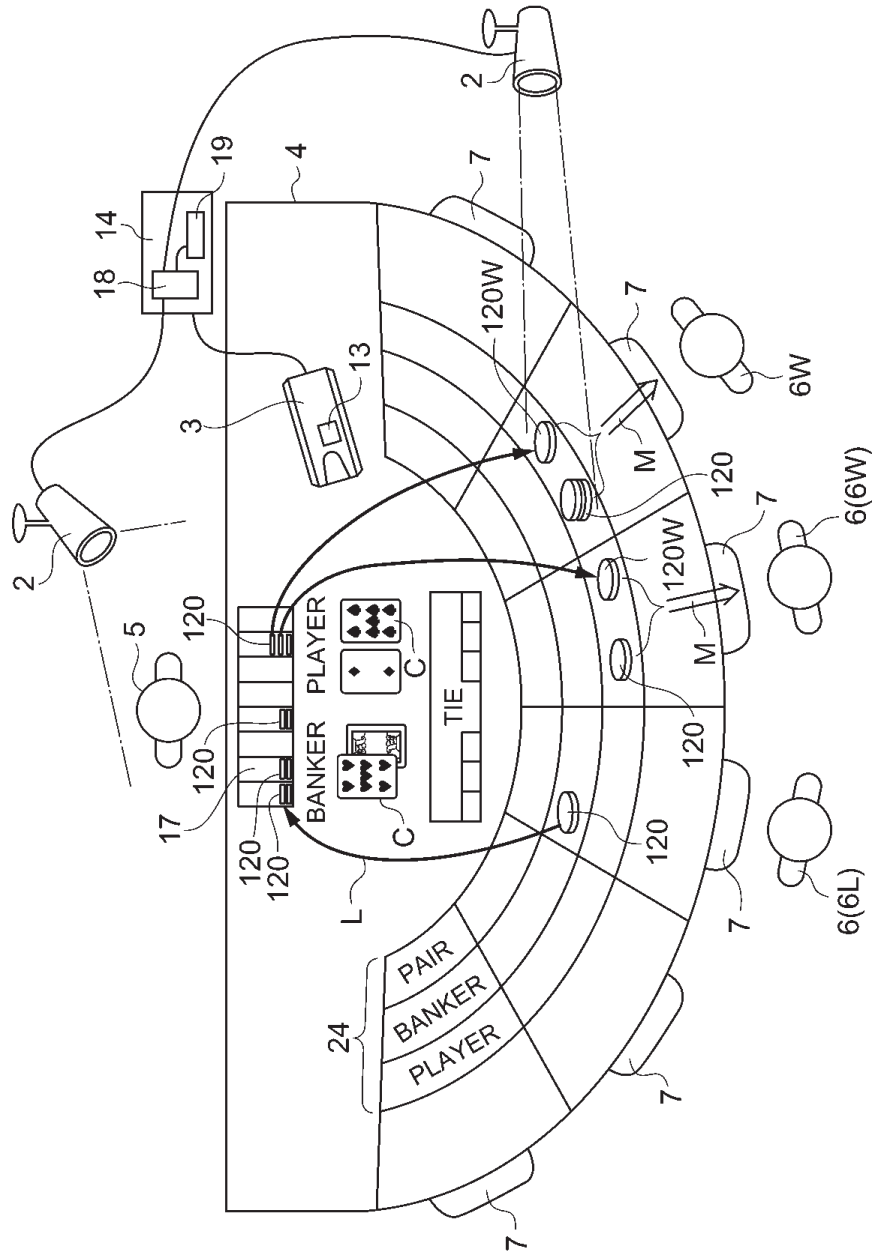
2
19
4
7
14
18
120W
7
13
3
6W
M
120
2
7
6(6W)
120W
5
120
PLAYER
C
M
TIE
120
BANKER
120
17
C
120
120
120
L
7
6(6L)
PAIR
BANKER
24
PLAYER
7
7

Fig.6

Fig.7

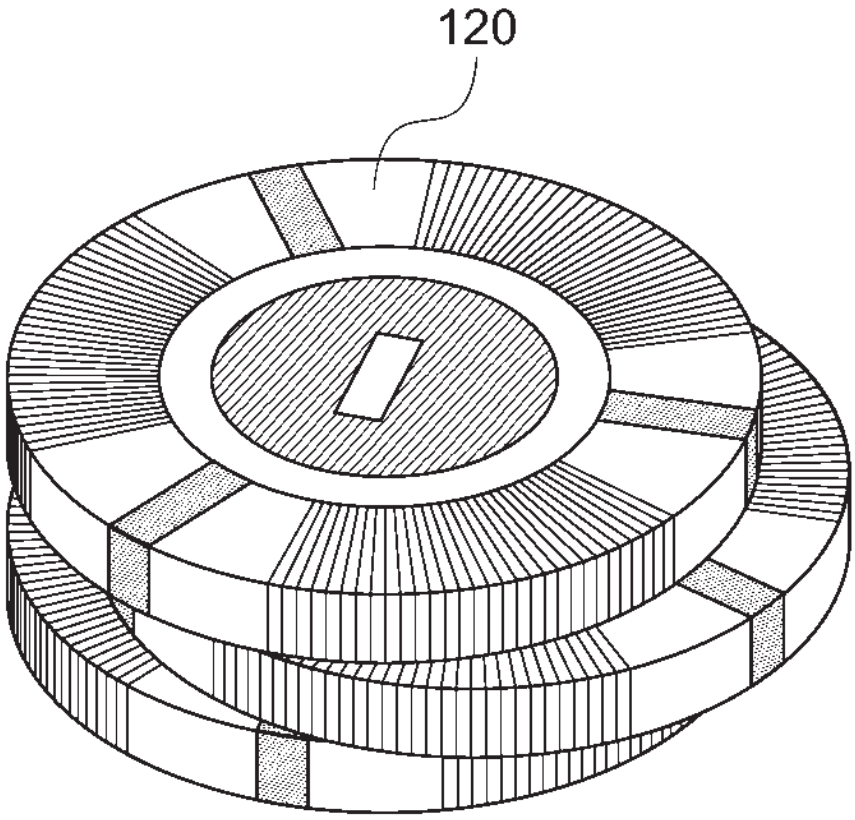

Fig.8

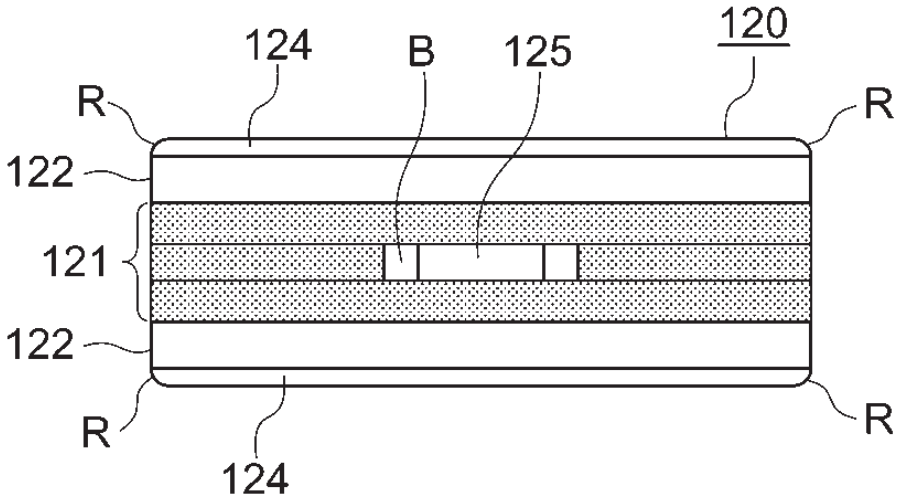

Fig.9A

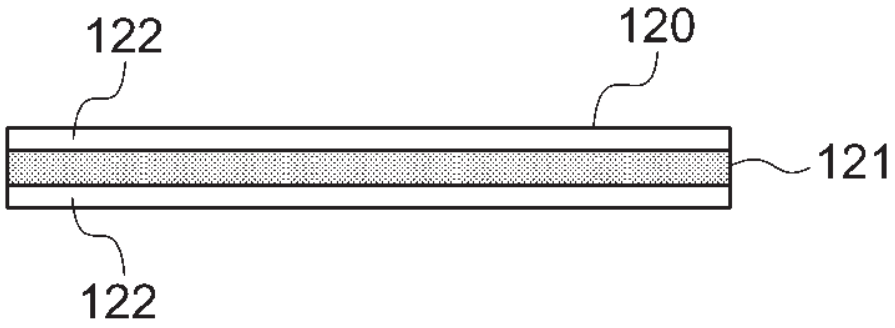

Fig.9B

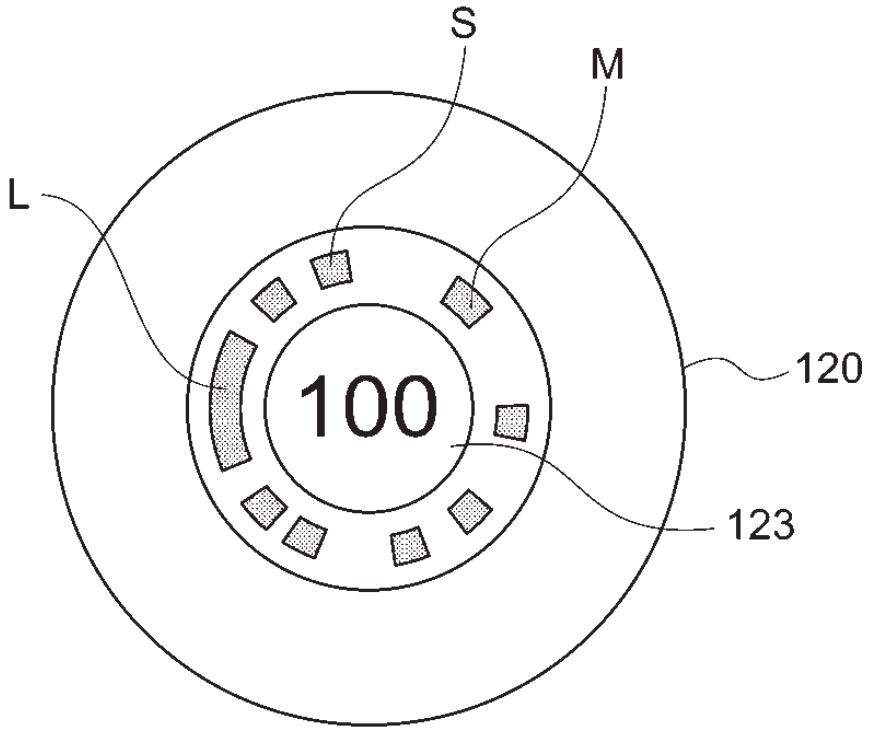

Fig.10A

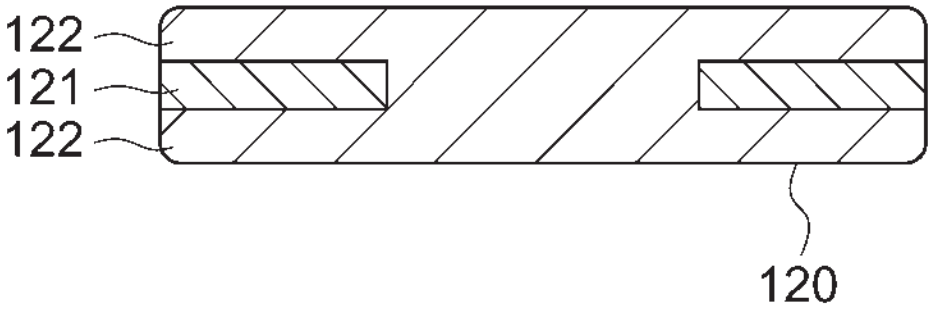

Fig.10B

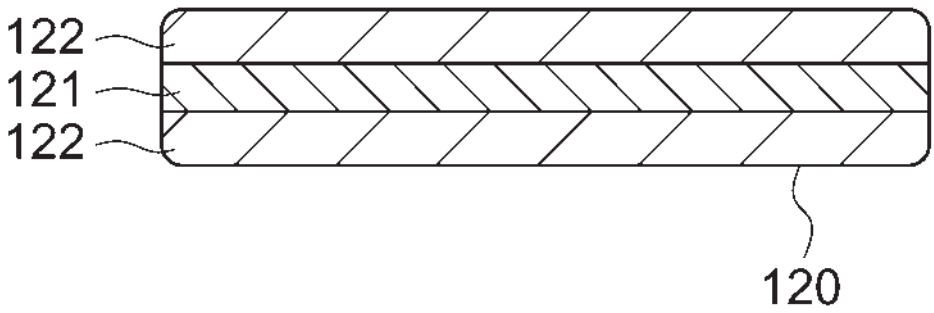

Fig.11

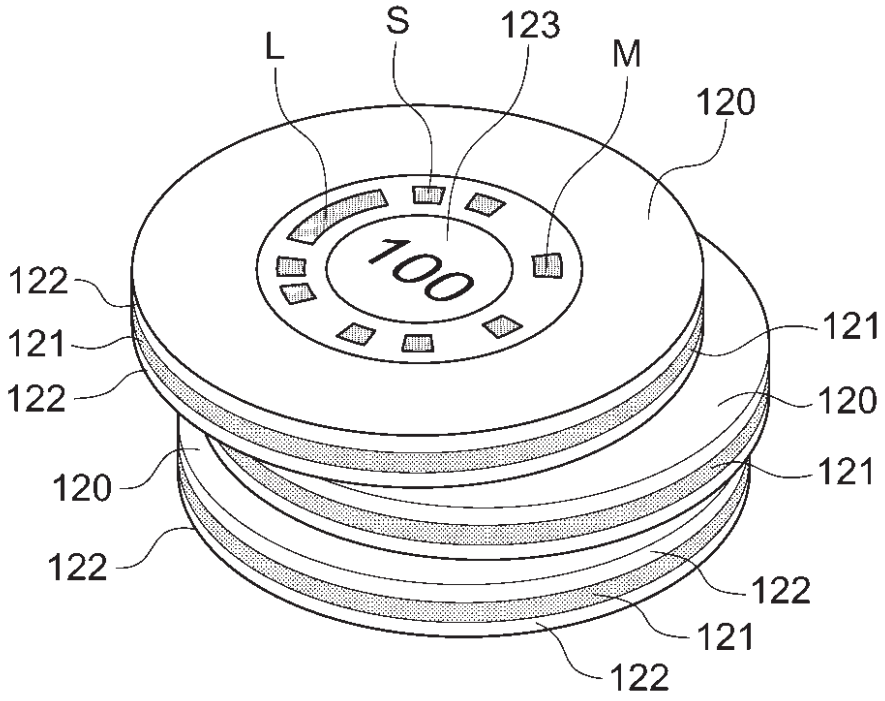

Fig.12

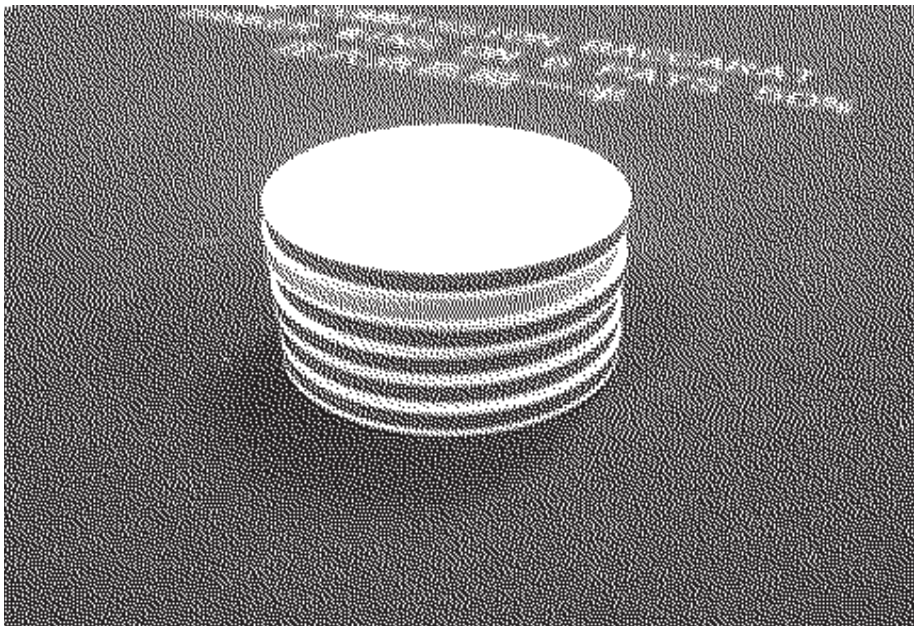

Fig.13A

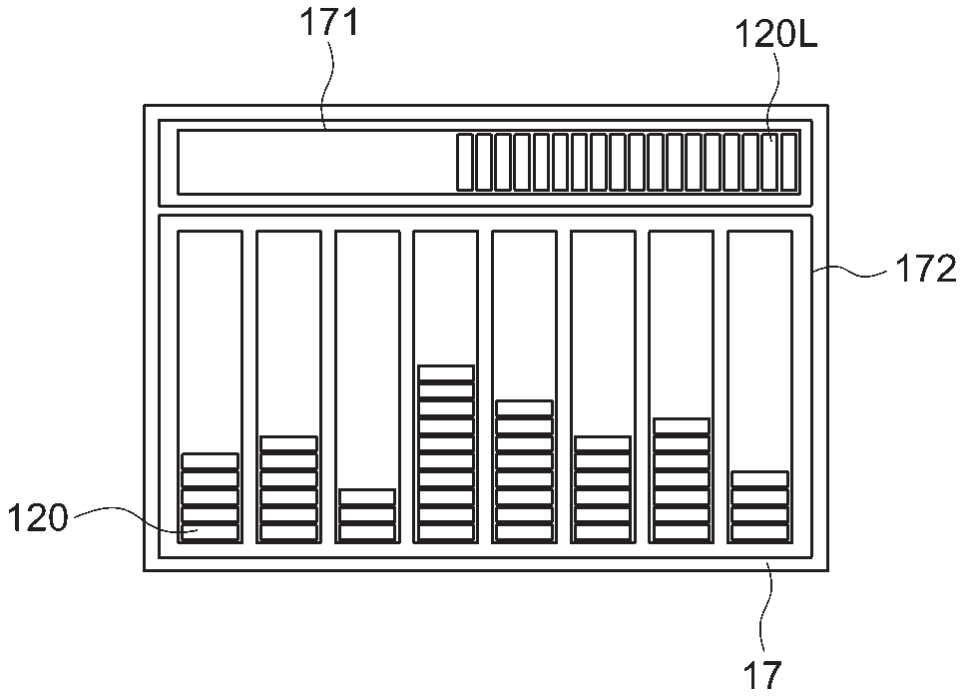

Fig.13B

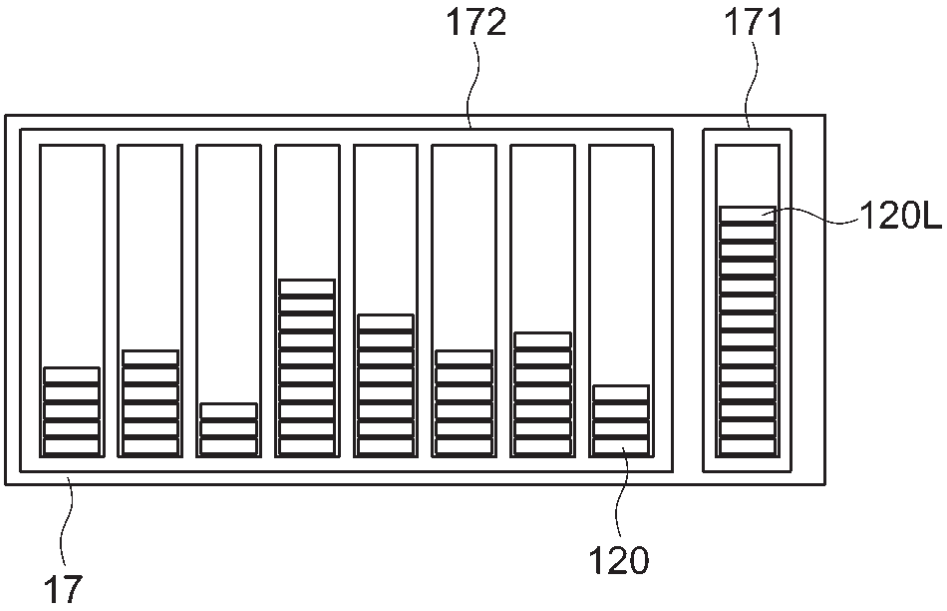

Fig.14A

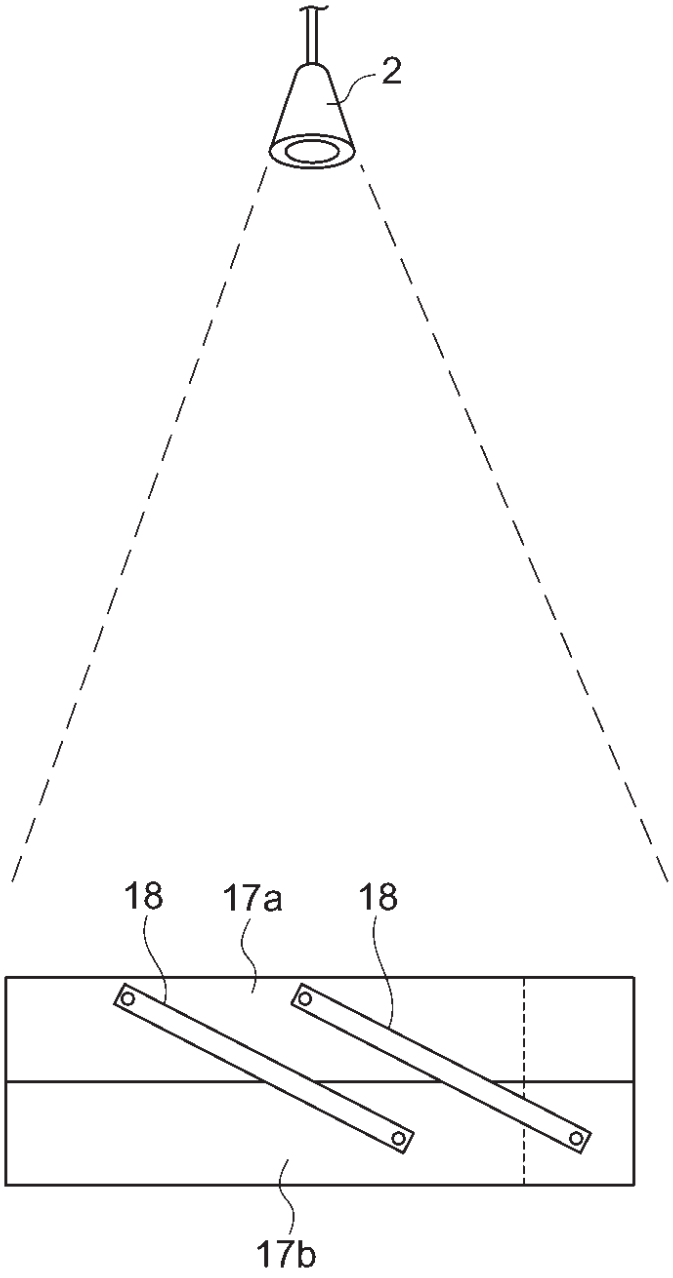

Fig.14B

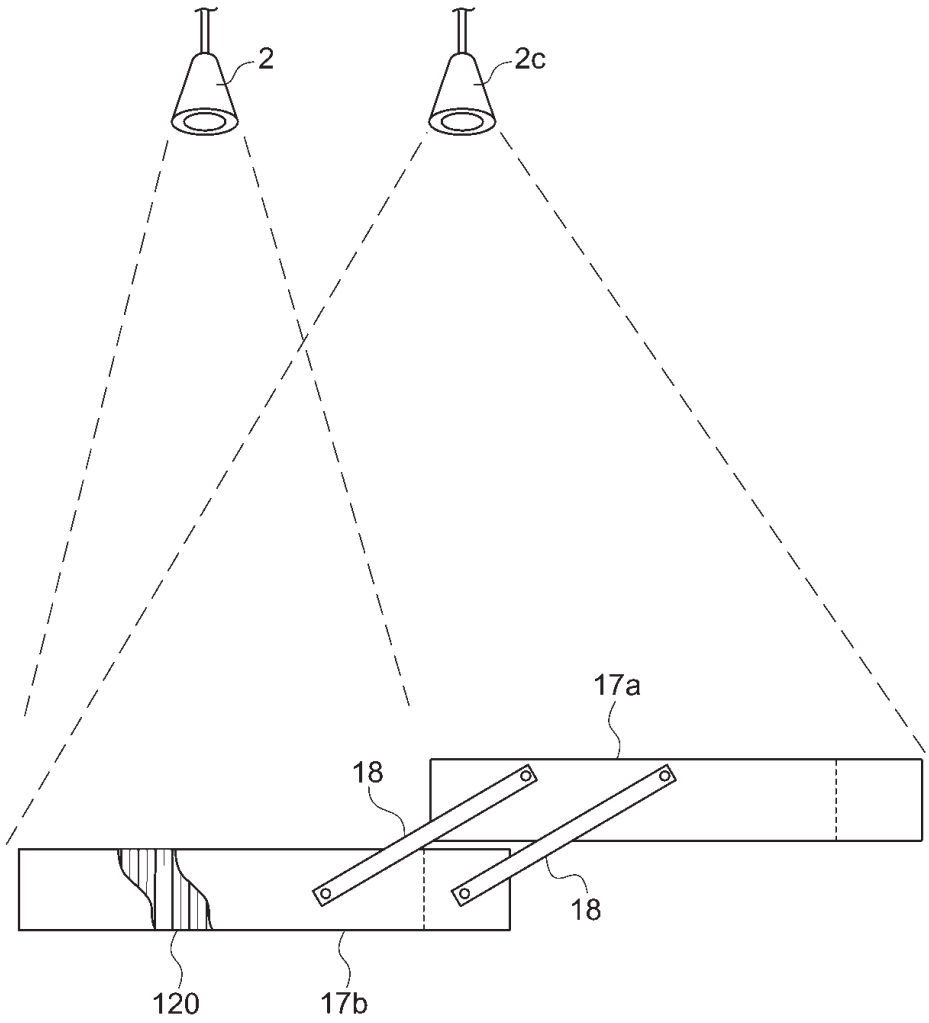

Fig.15

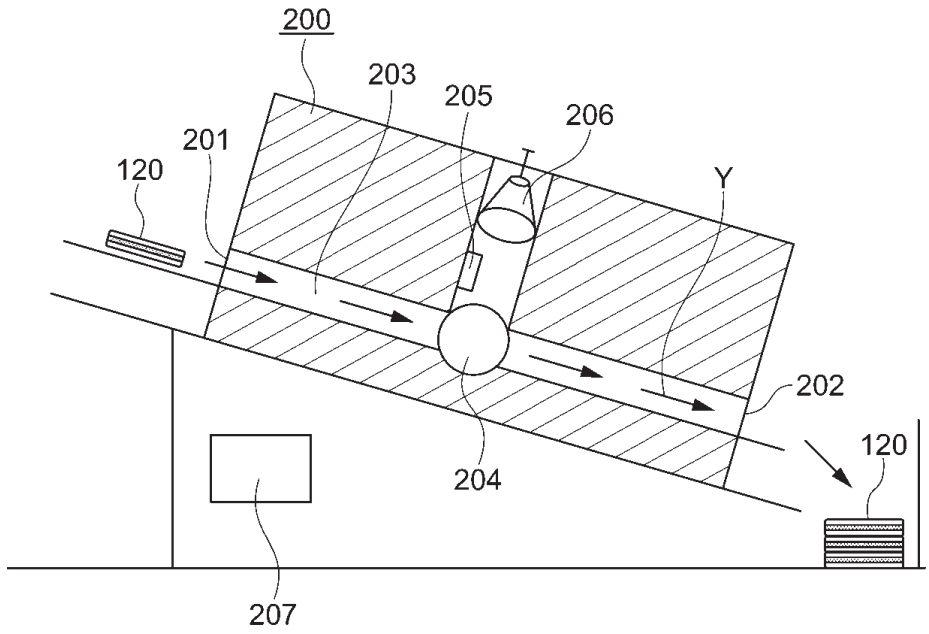

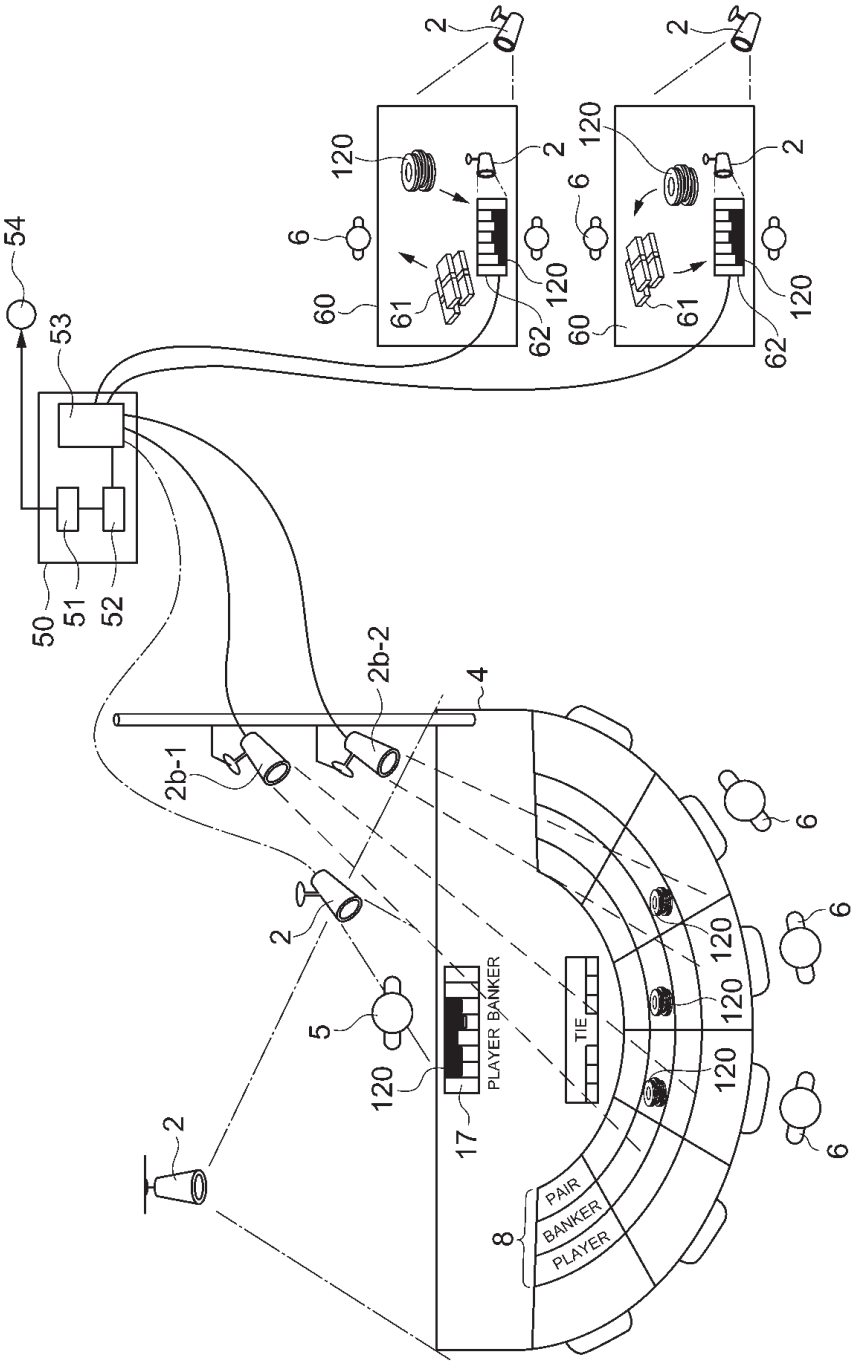
54
53
50
51
52
2b-1
2b-2
4
2
5
120
17
PLAYER
BANKER
TIE
PAIR
BANKER
PLAYER
8
6
60
61
62

Fig.16

Fig.17

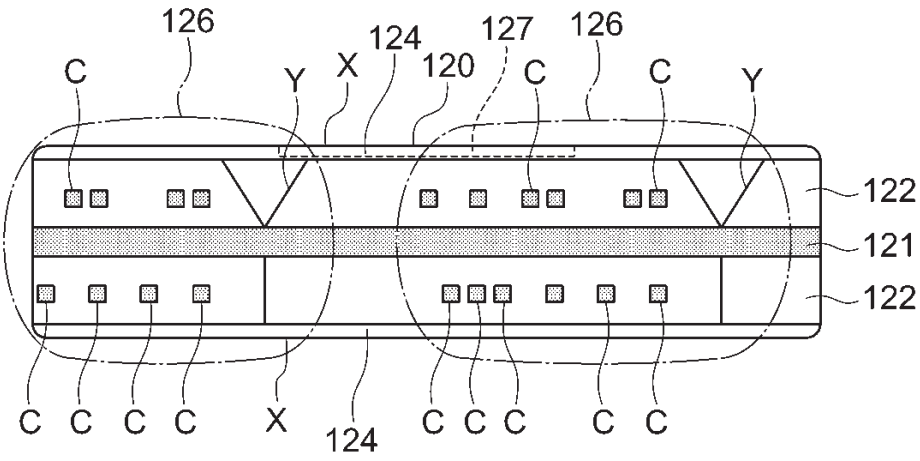

Fig.18

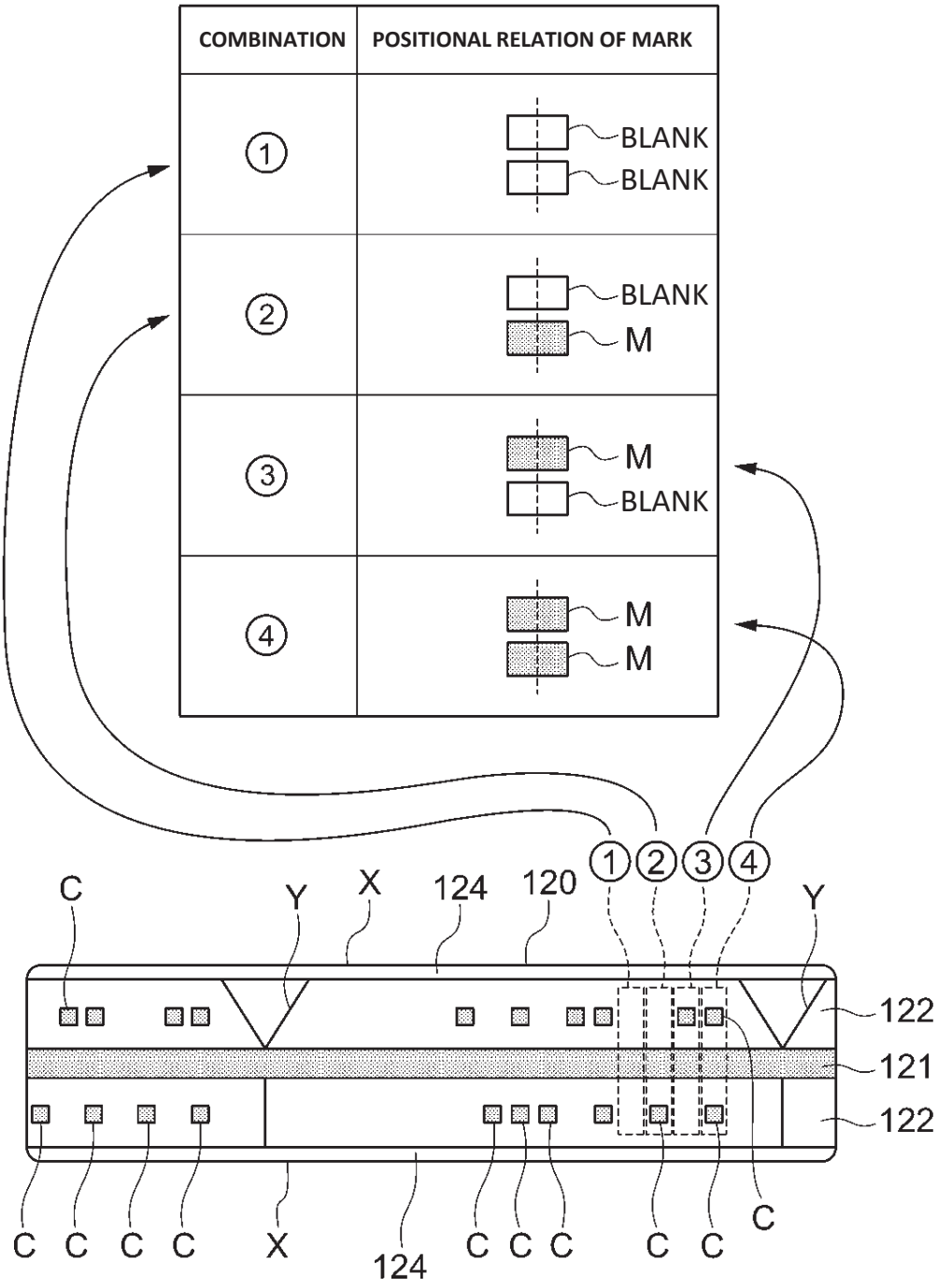
COMBINATION
POSITIONAL RELATION OF MARK
①
BLANK
BLANK
②
BLANK
M
③
M
BLANK
④
M
M
1 2 3 4
C
Y
X
124
120
Y
122
121
122
C C C C X 124 C C C C C C C

Fig.19

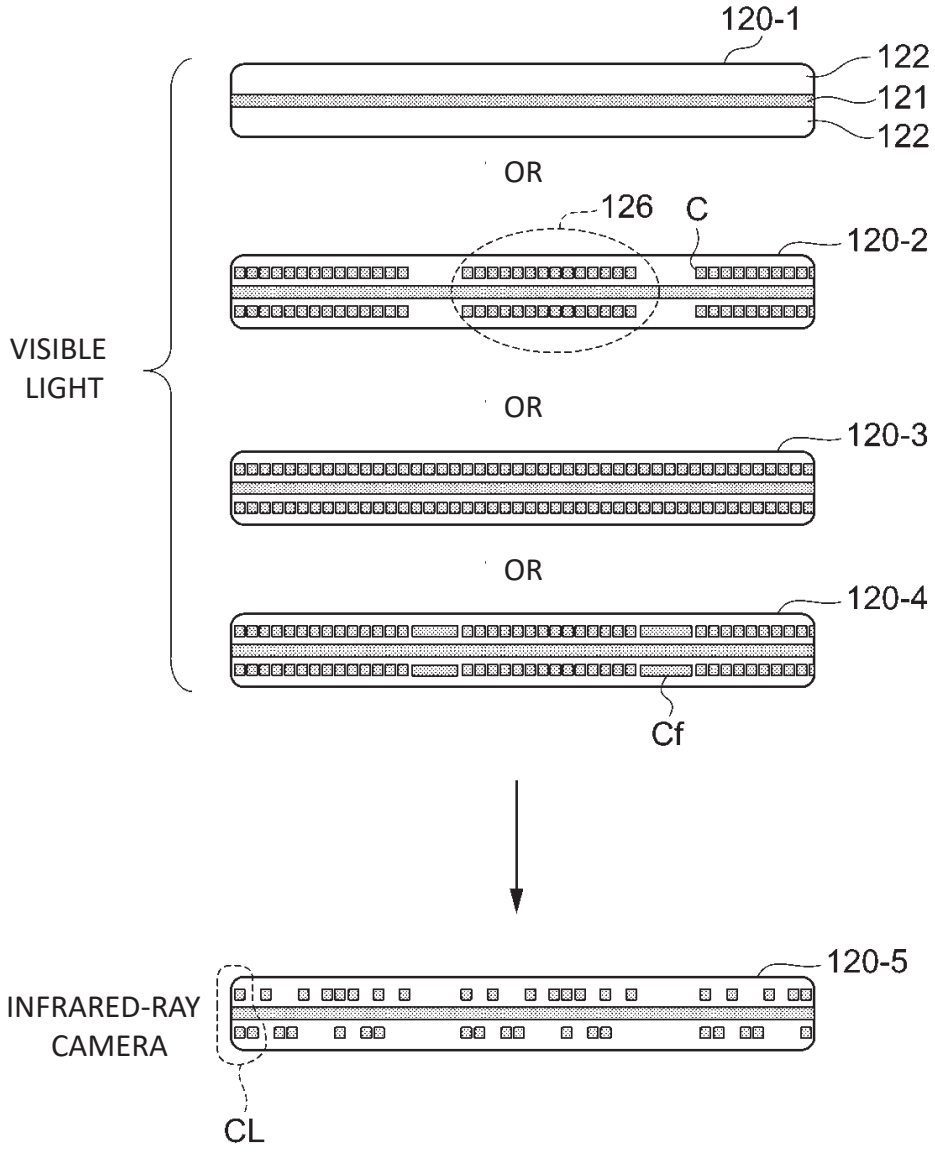
120-1
122
121
122
OR
126
C
120-2
VISIBLE
LIGHT
OR
120-3
OR
120-4
Cf
120-5
INFRARED-RAY
CAMERA
CL

Fig.20A

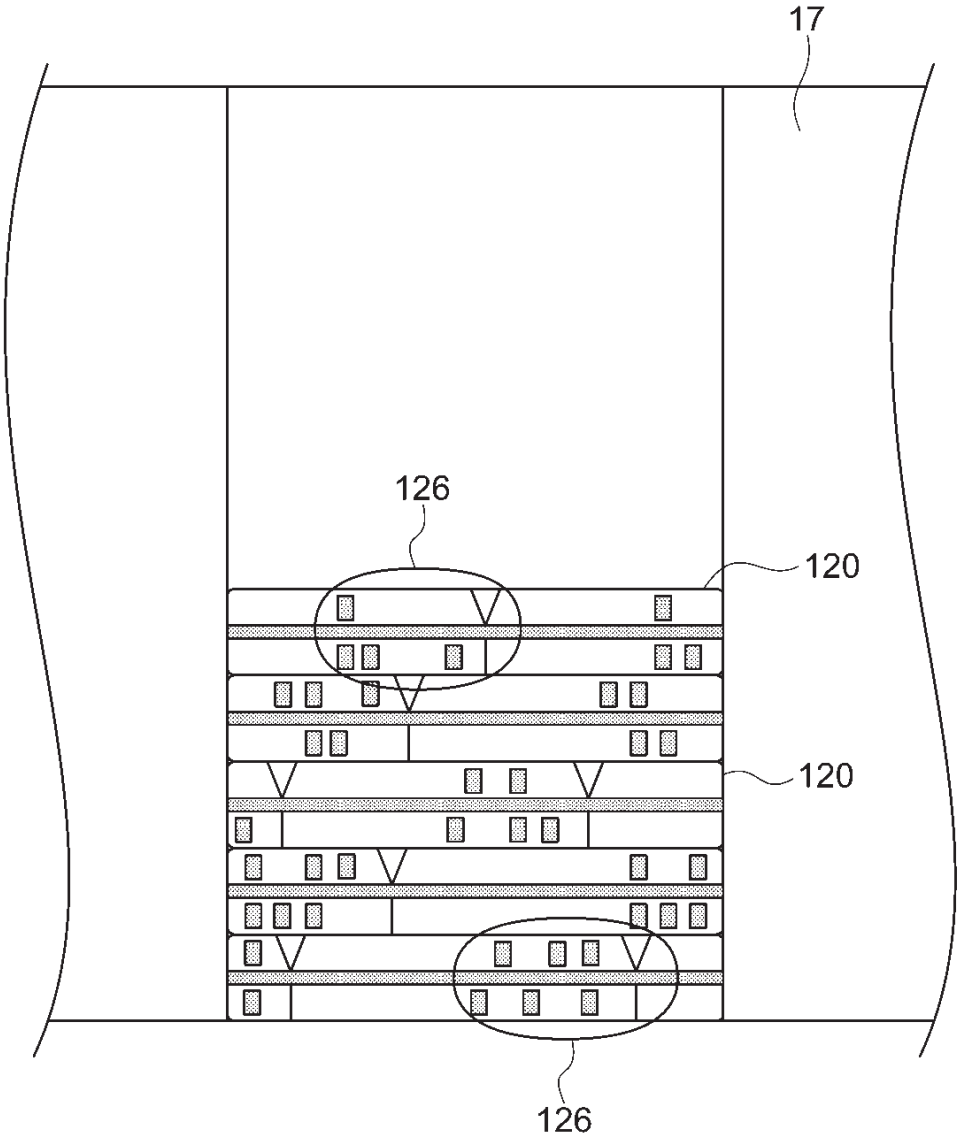

Fig.20B

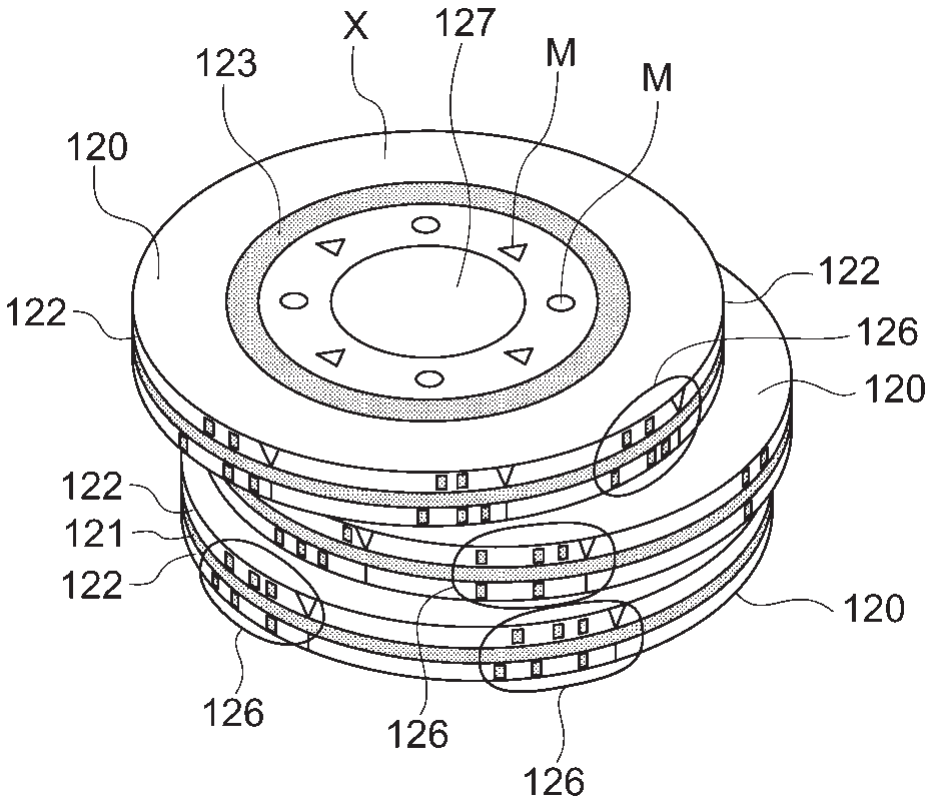

Fig.21

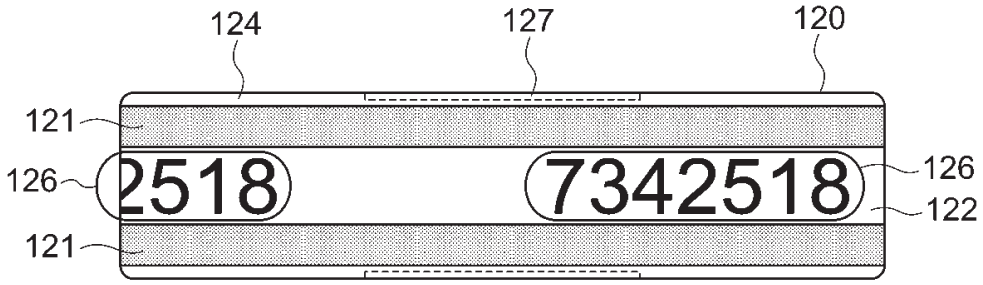

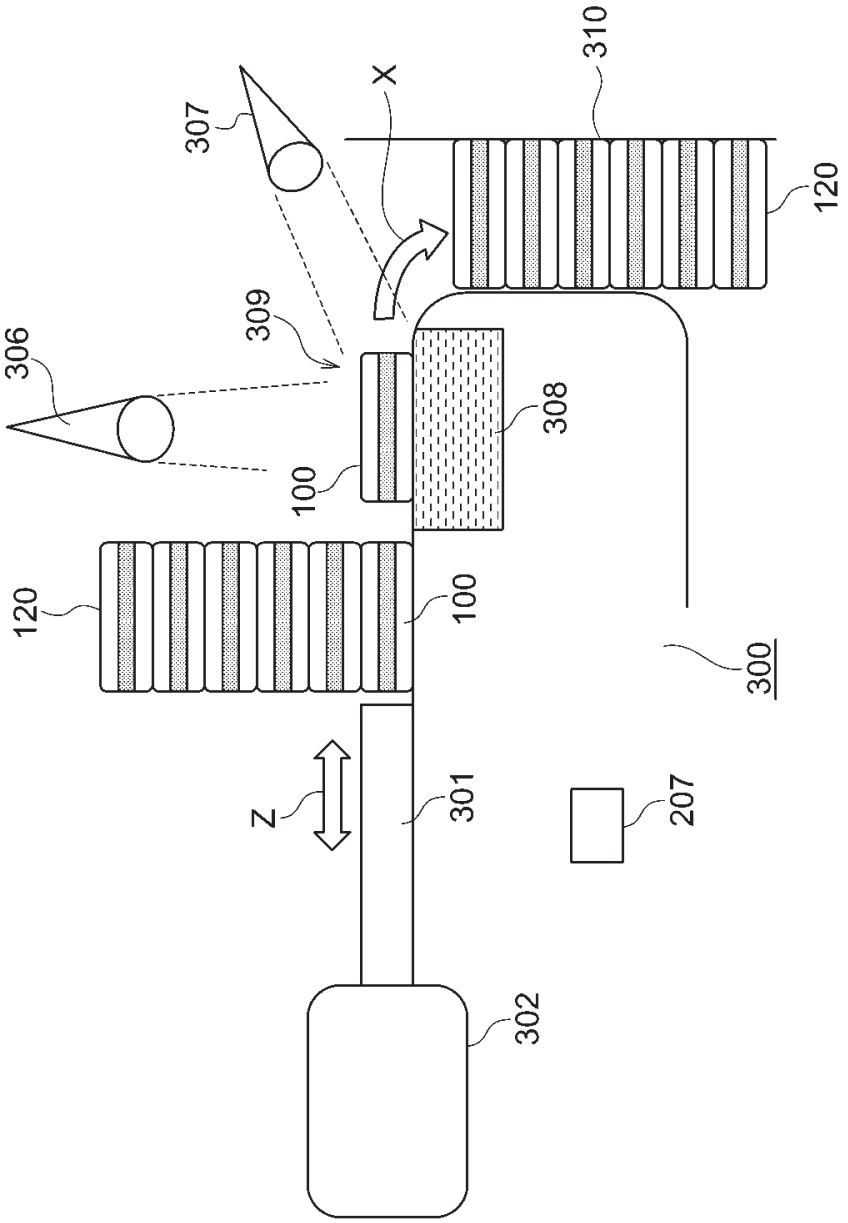

Fig.22

Fig.23

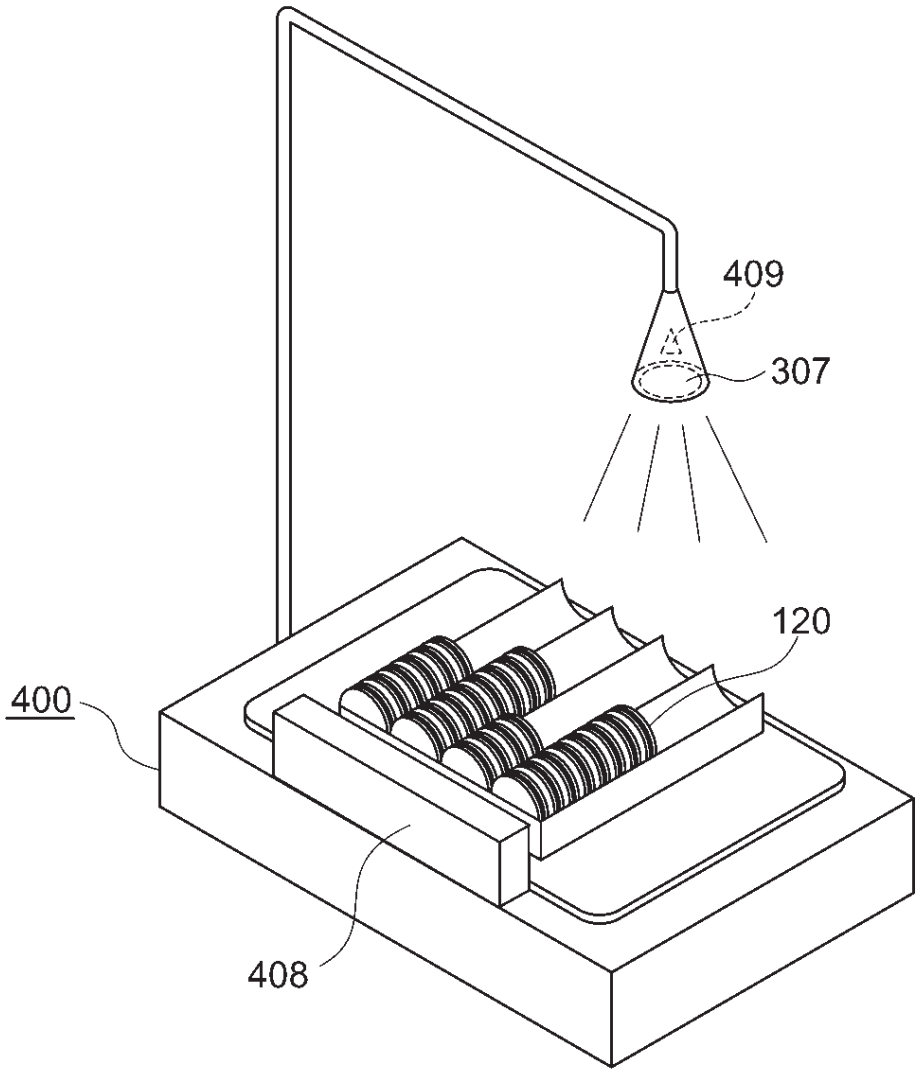

Fig.24

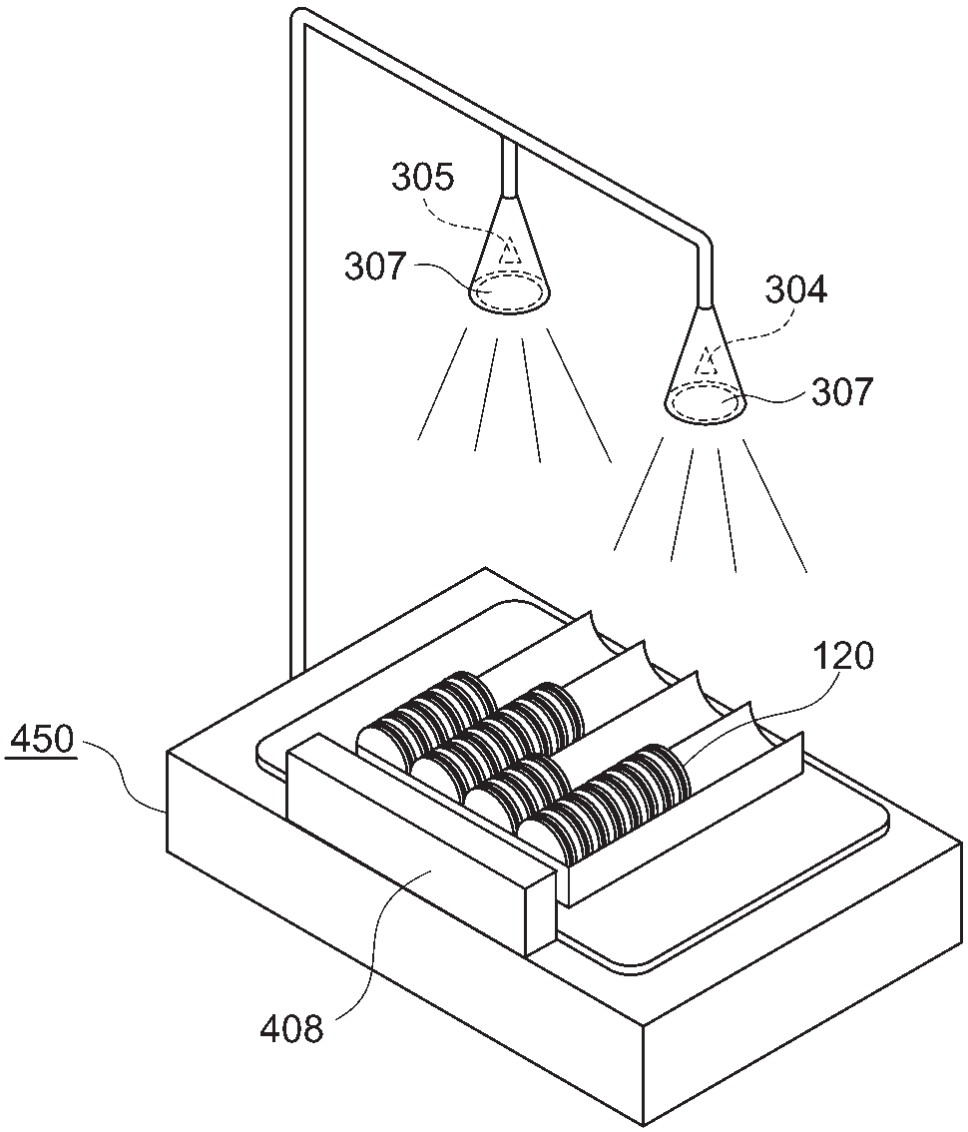

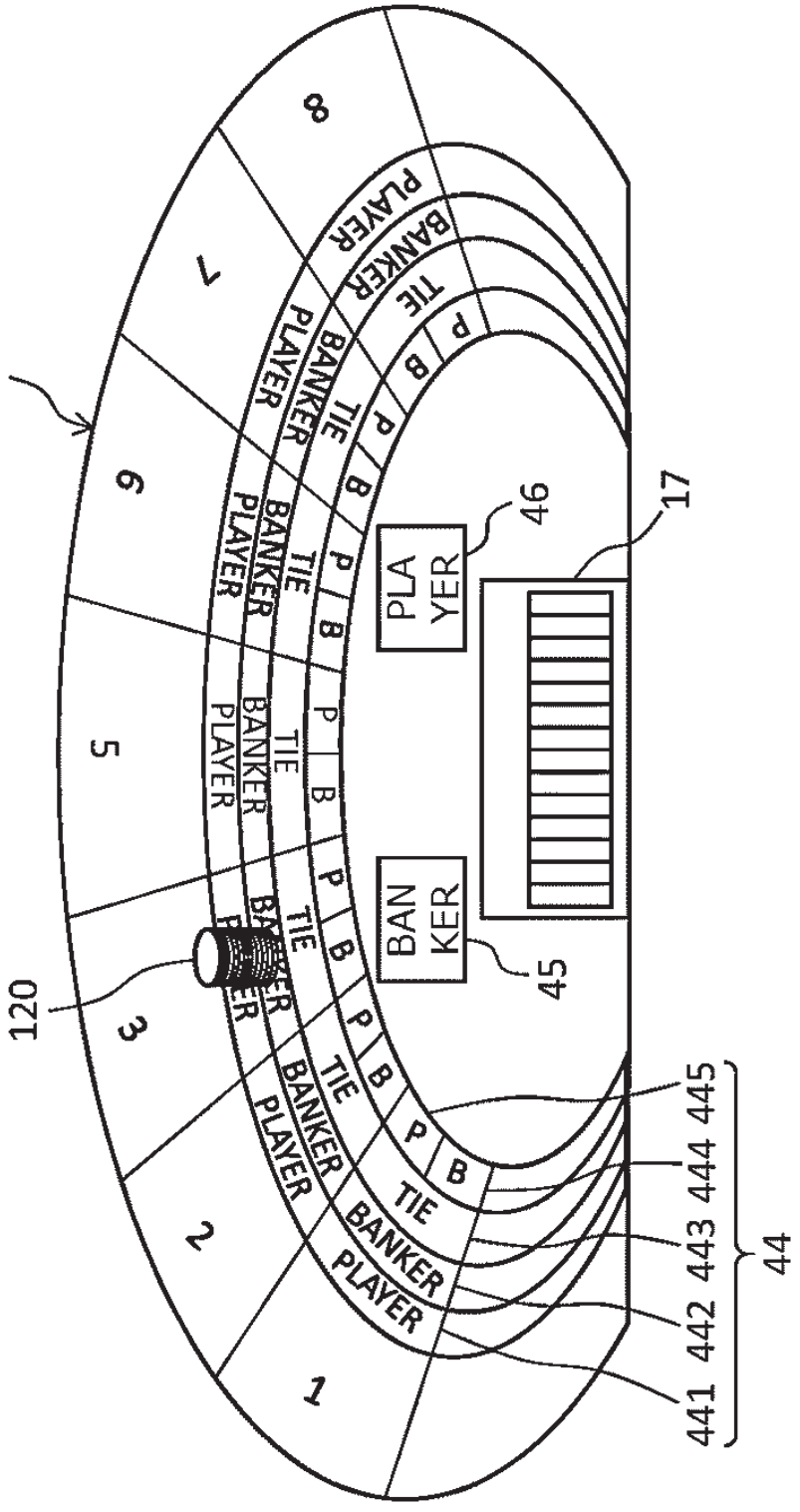
4
8
7
6
5
3
2
1
PLAYER
BANKER
TIE
P
B
PLA
YER
46
17
BAN
KER
45
120
445
444
443
442
441
44

Fig.25

Fig.26

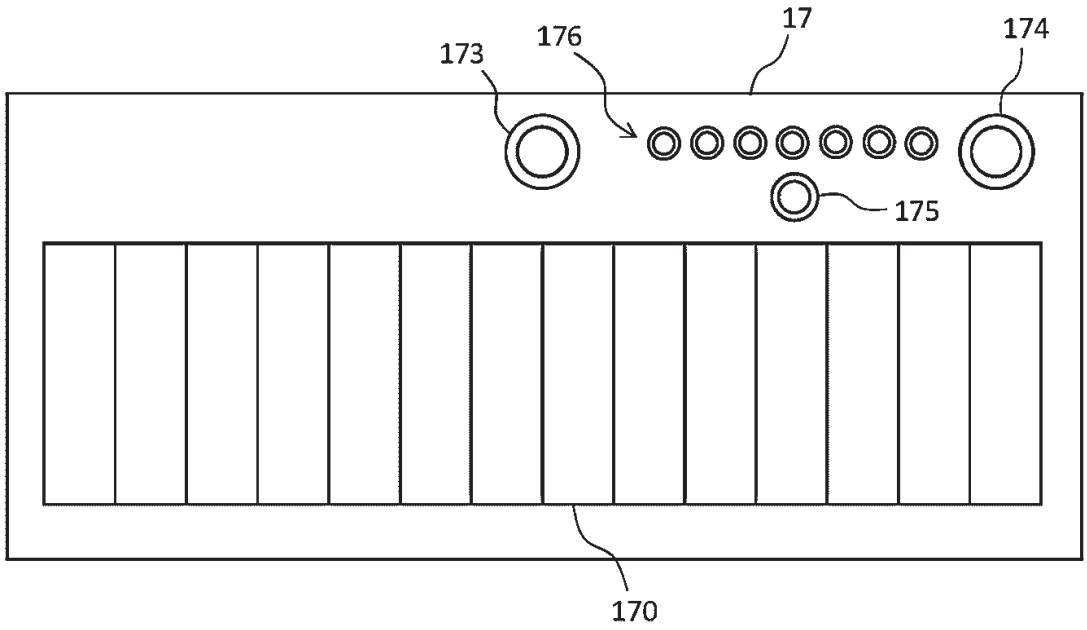

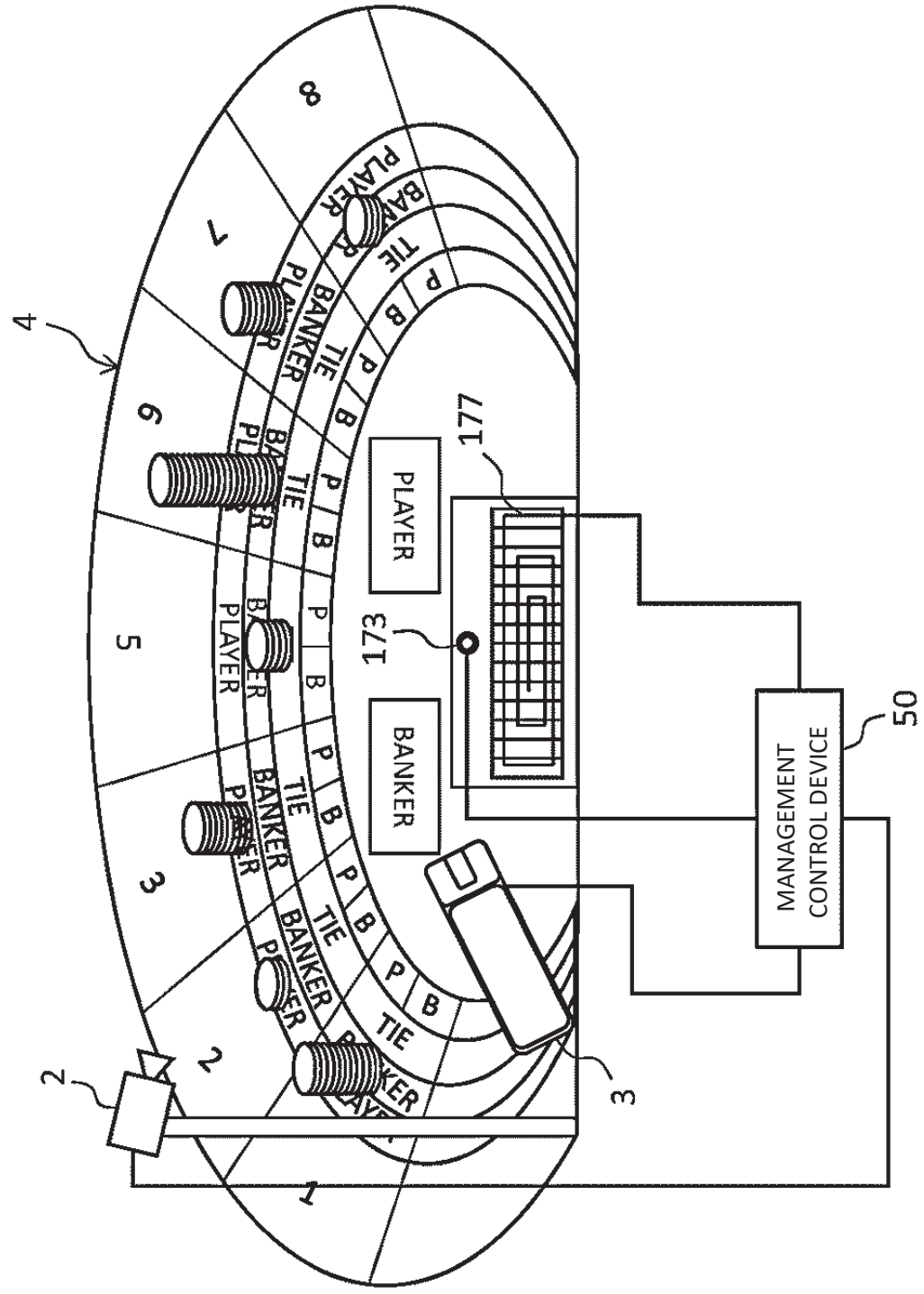
4
1
2
3
5
6
7
8
9
PLAYER
BANKER
TIE
P
B
PLAYER
BANKER
TIE
177
173
PLAYER
BANKER
MANAGEMENT CONTROL DEVICE
50

Fig.27

Fig.28

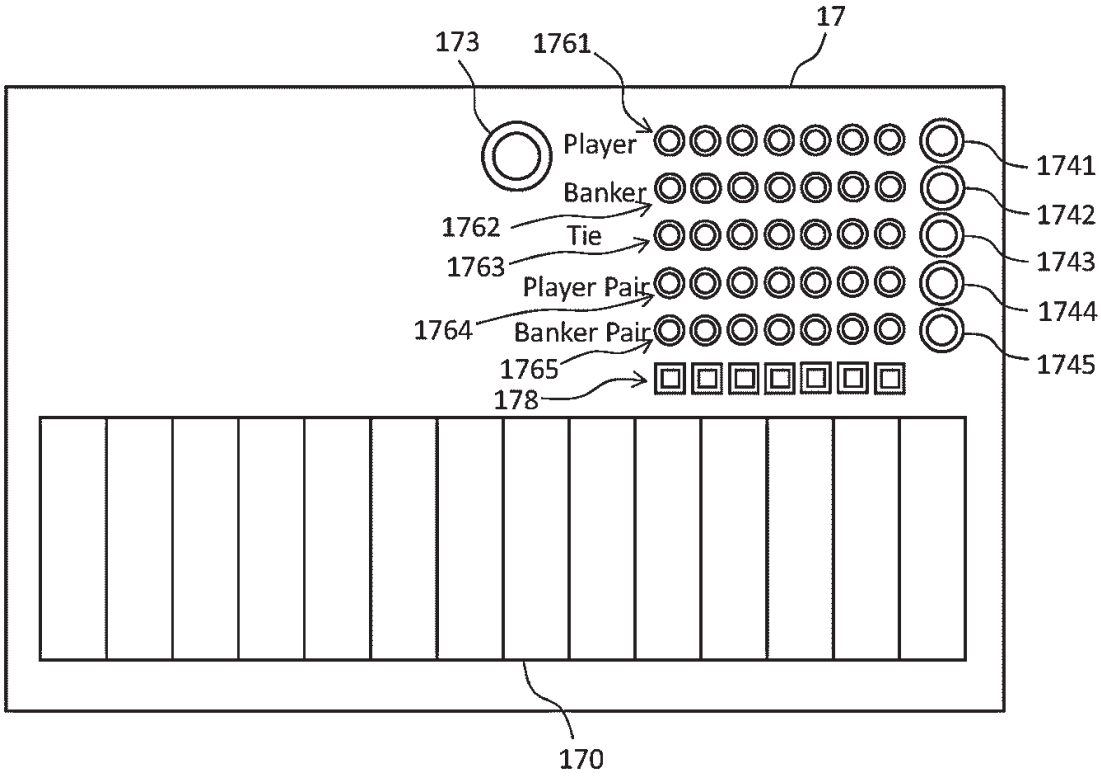
17
173
1761
Player
Banker
Tie
Player Pair
Banker Pair
1762
1763
1764
1765
178
1741
1742
1743
1744
1745
170

Fig.29

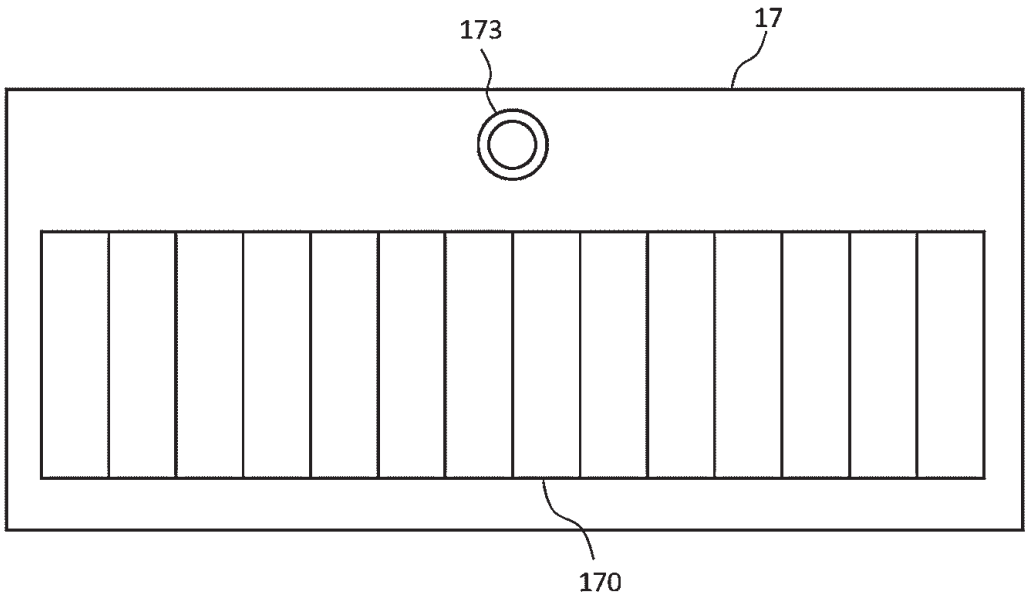

Fig.30

