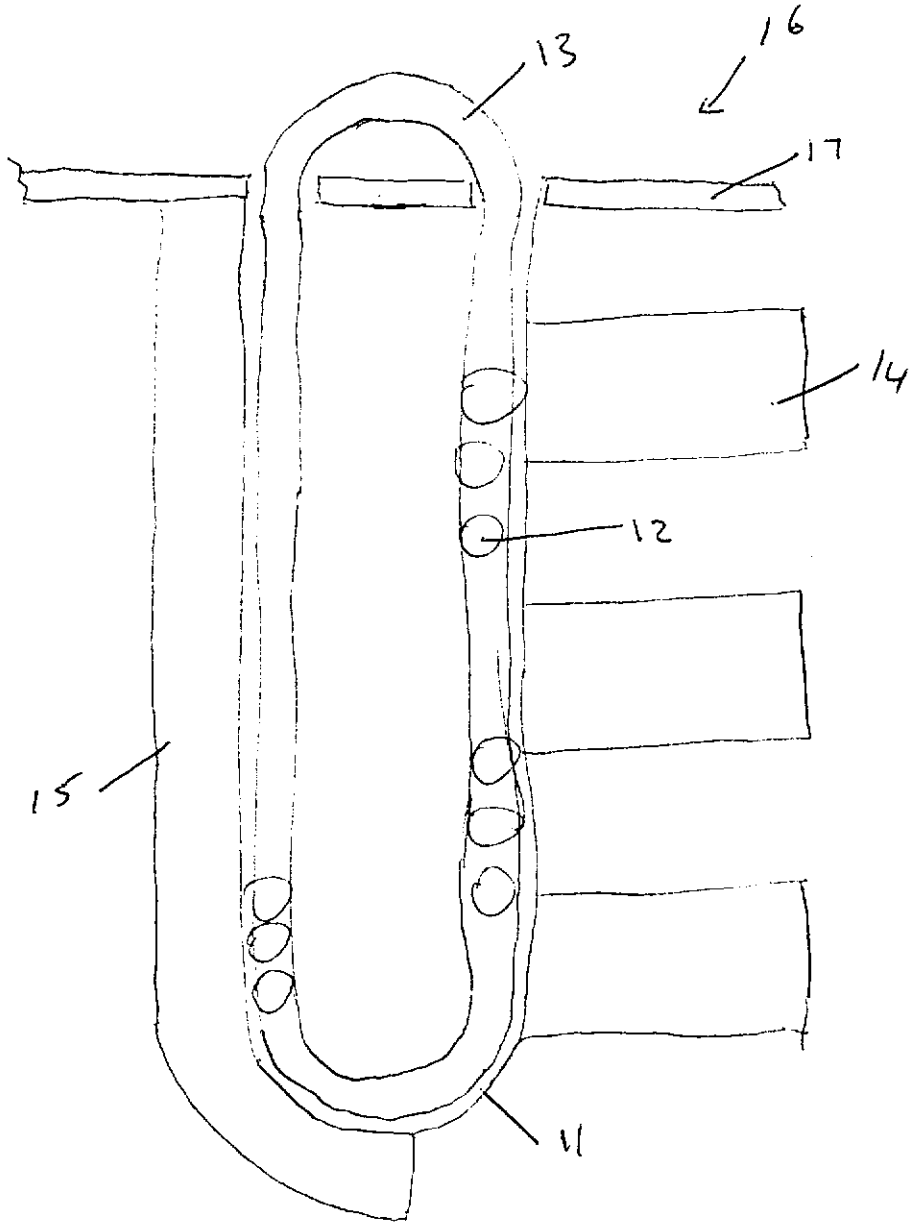

Figure 1

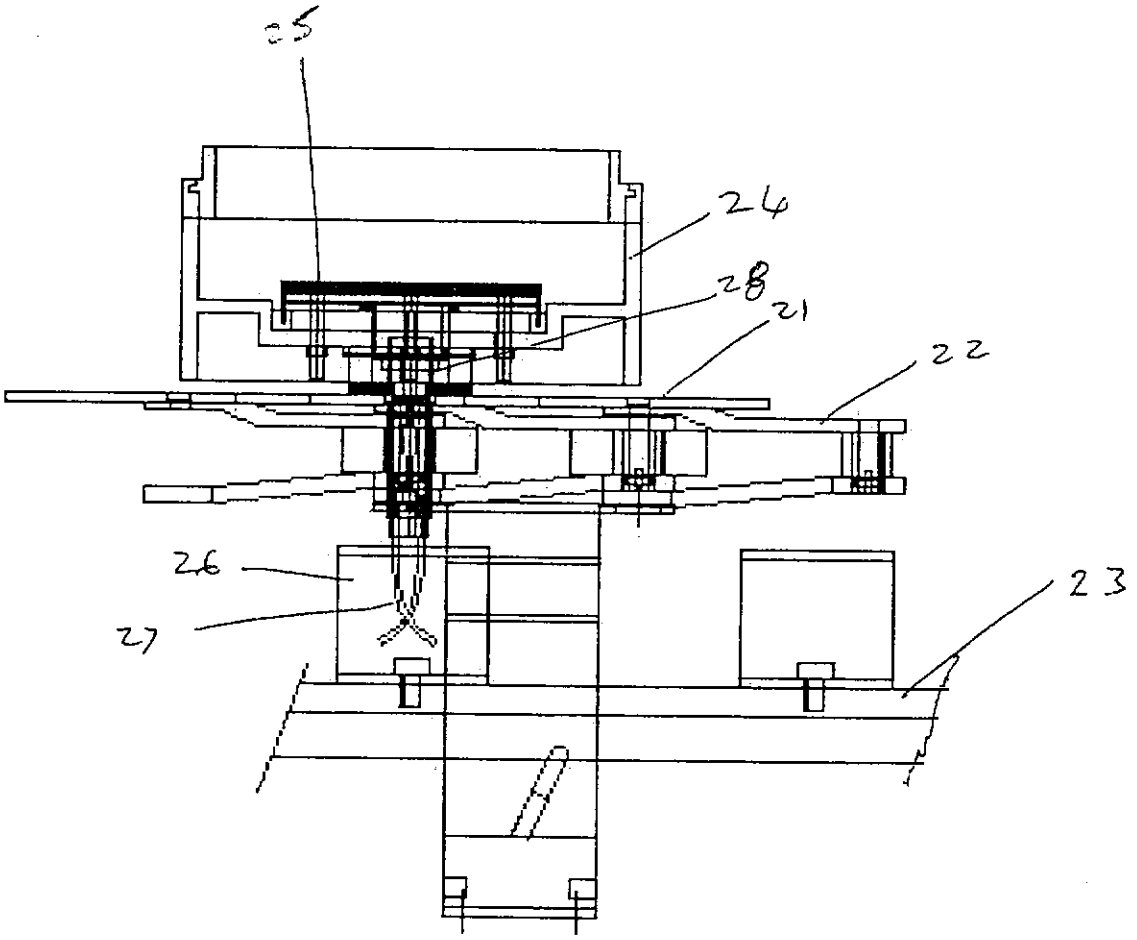

Figure 2.

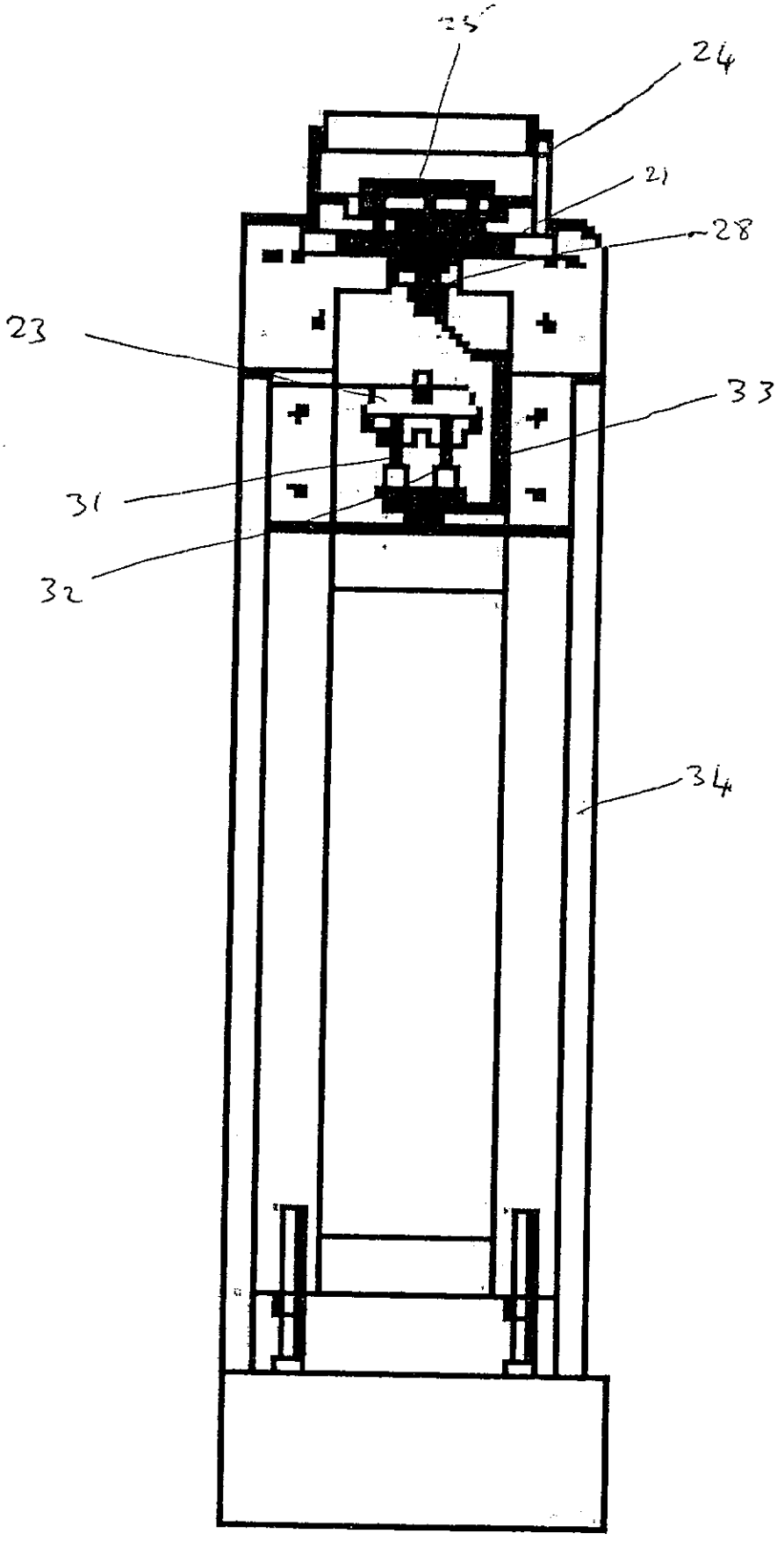

Figure 3

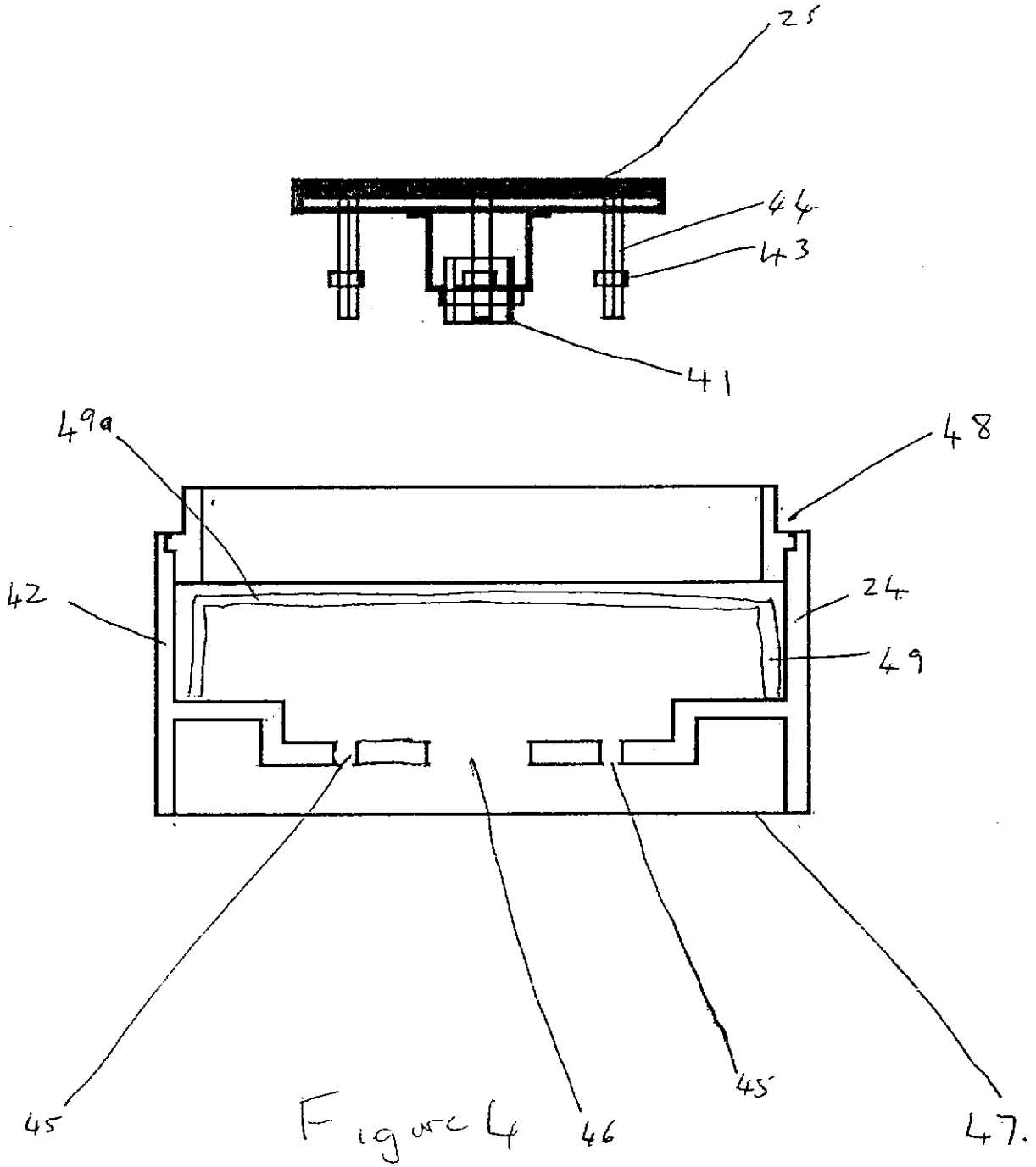

Figure 4

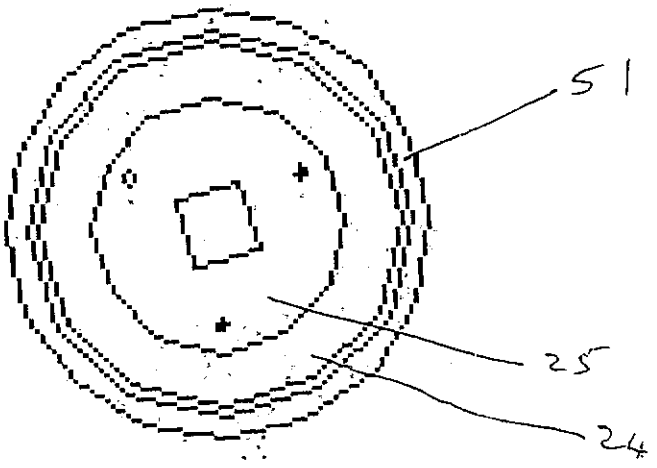

Figure 5