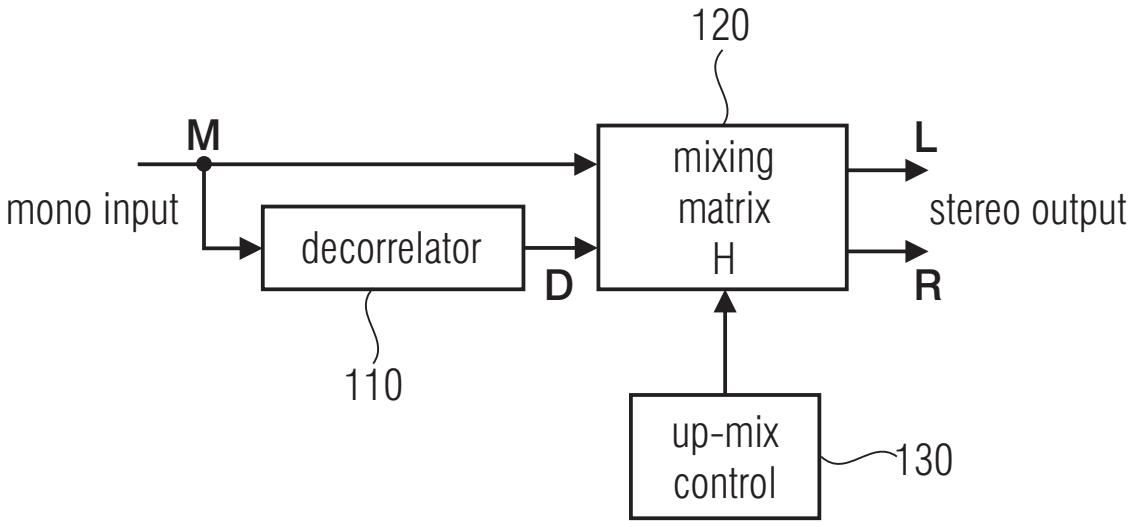


FIG 1
(STATE OF THE ART)

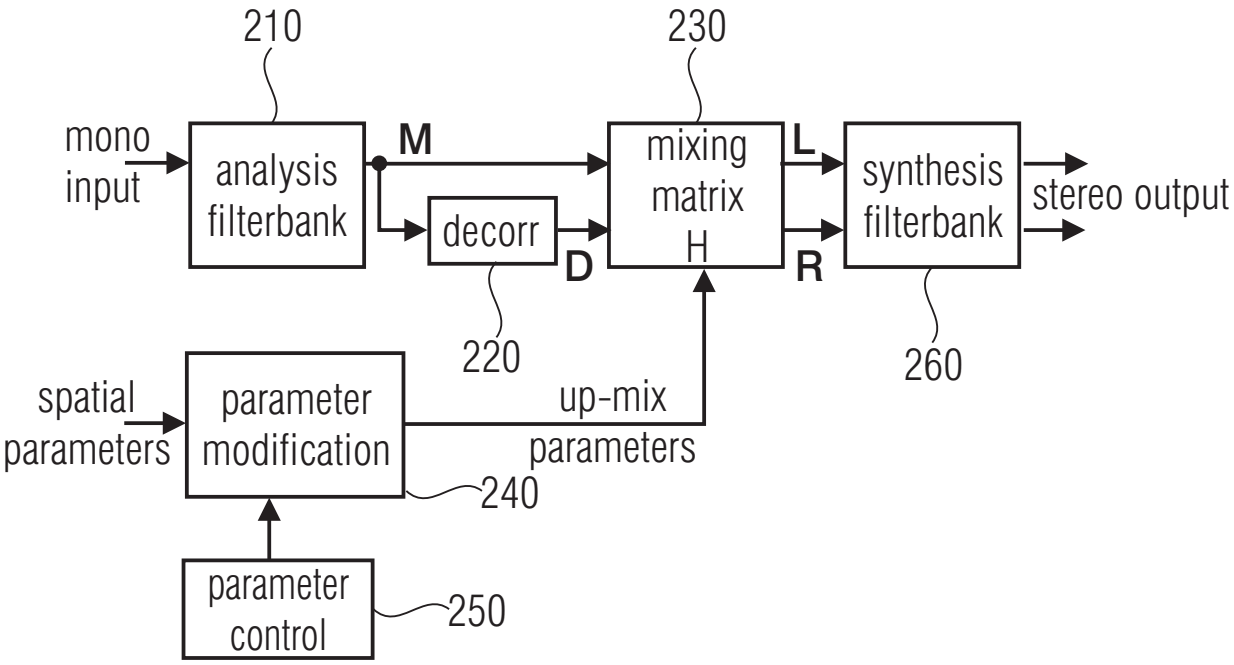


FIG 2
(STATE OF THE ART)

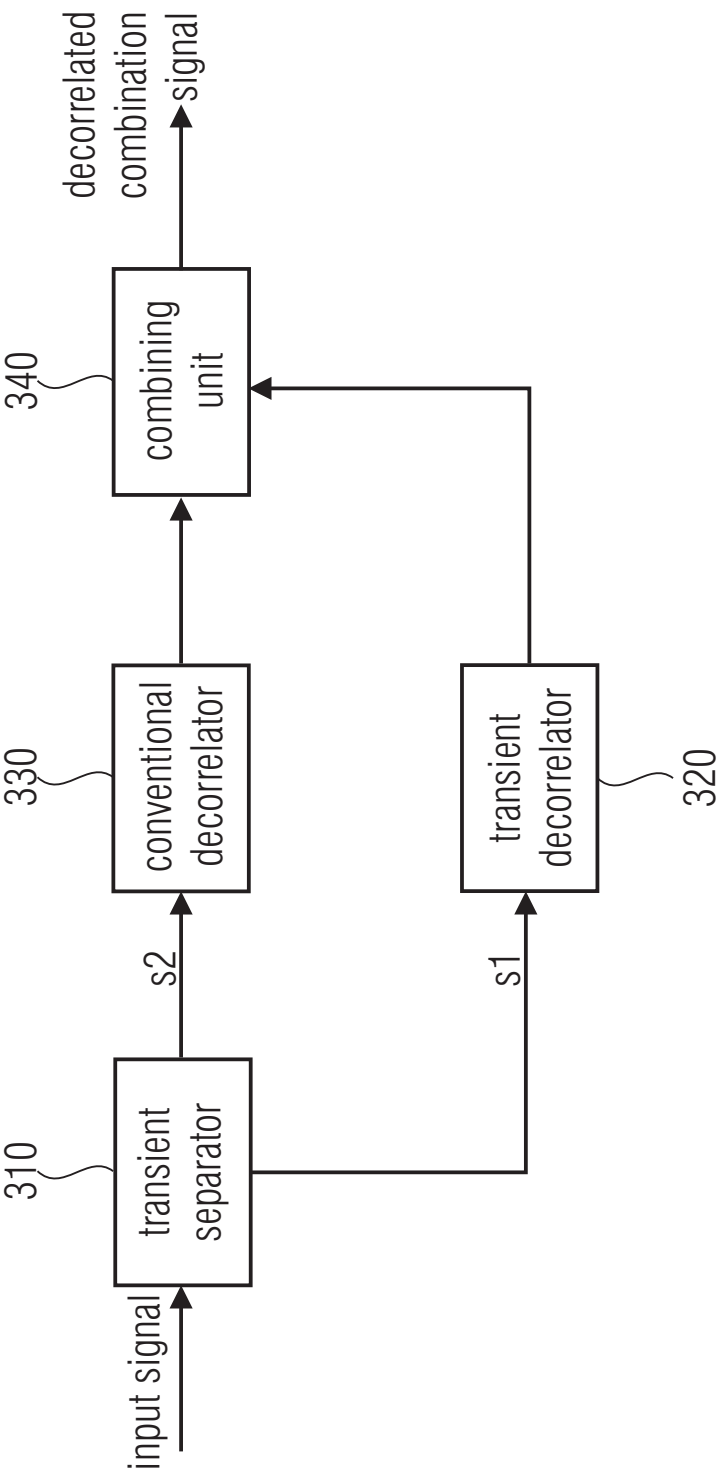
input signal
310
transient separator
s2
s1
330
conventional decorrelator
transient decorrelator
320
340
combining unit
decorrelated combination signal

FIG 3

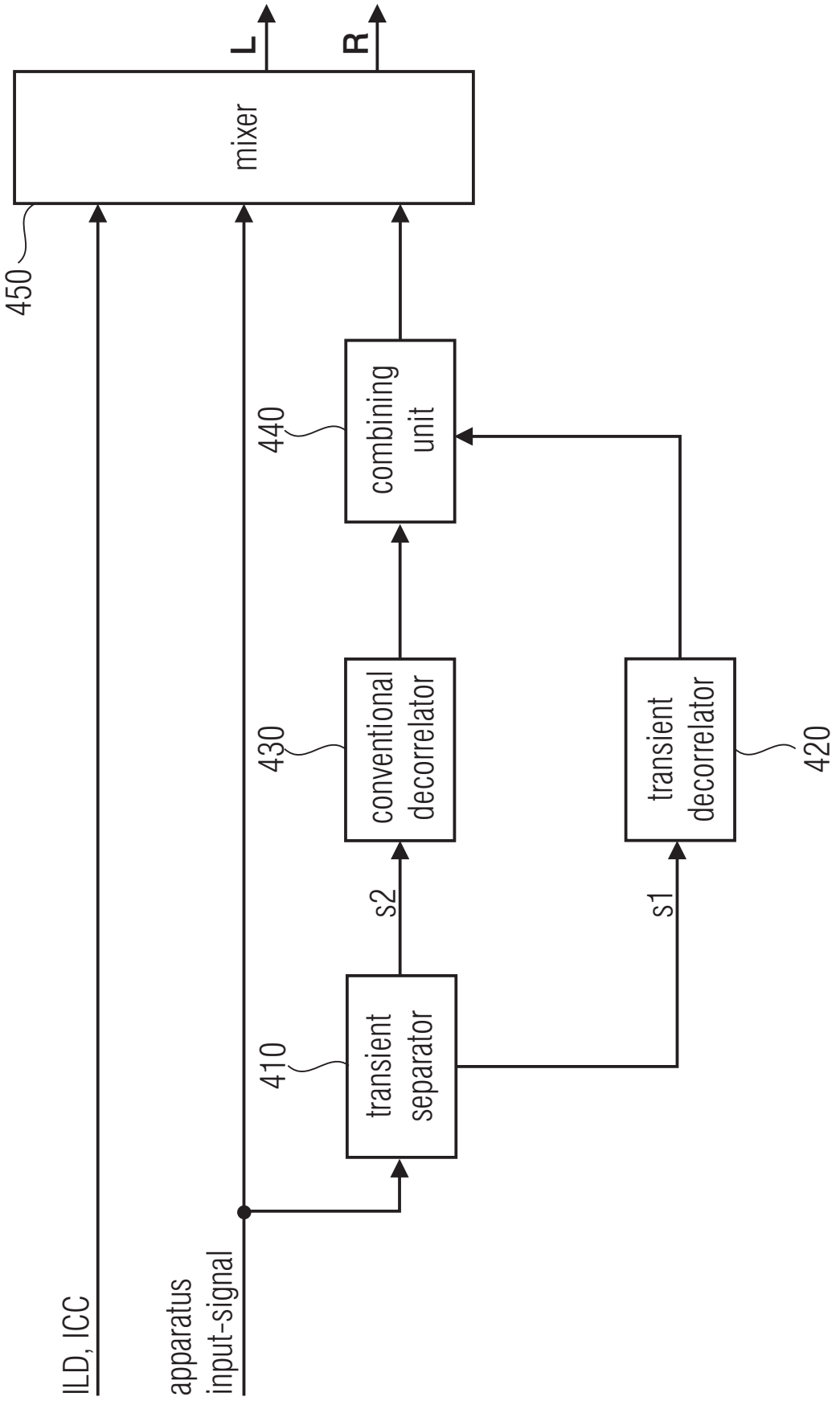
L
R
mixer
450
440
combining unit
430
conventional decorrelator
420
transient decorrelator
410
transient separator
s2
s1
ILD, ICC
apparatus input-signal

FIG 4

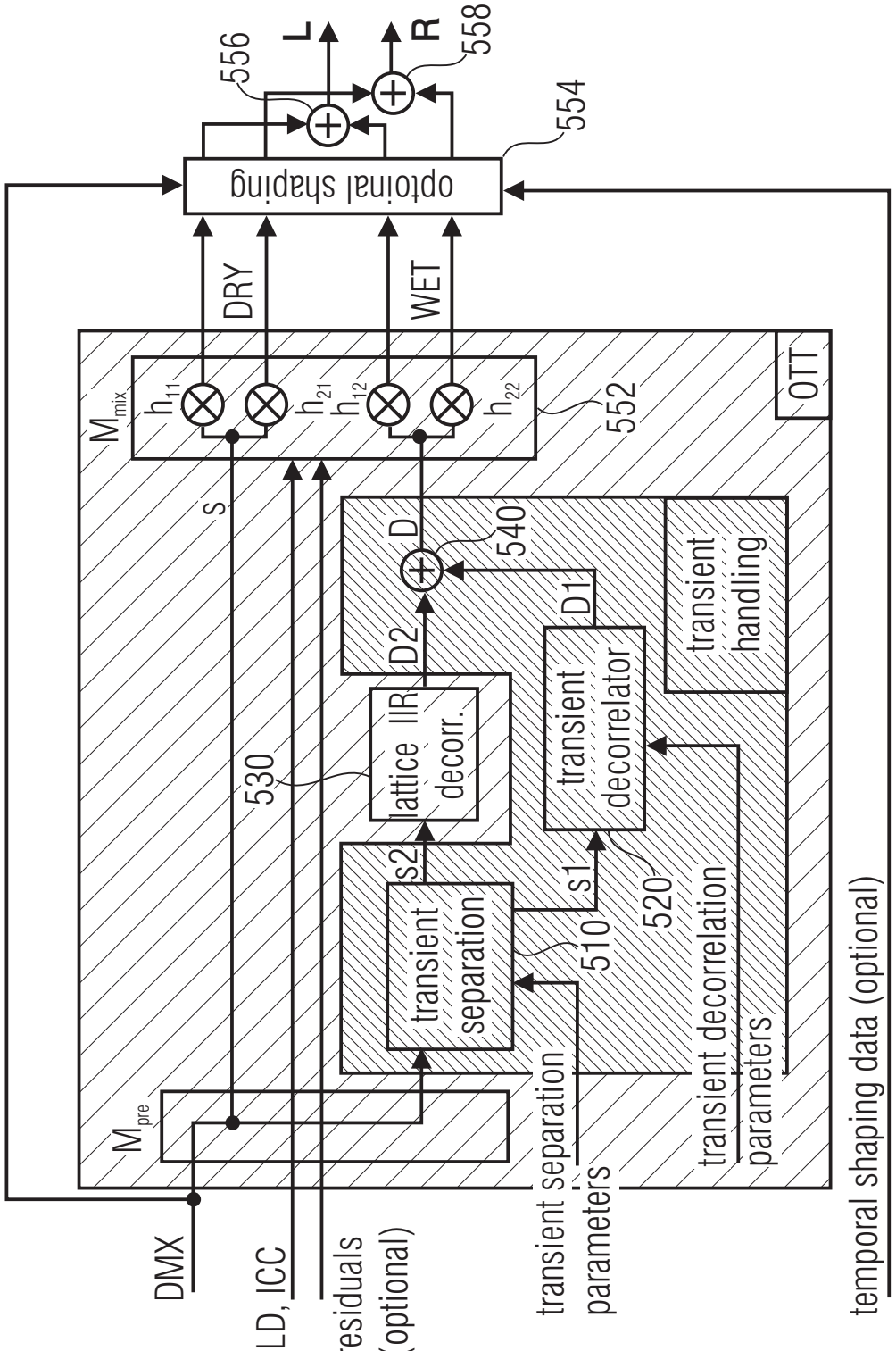
DMX
ILD, ICC
residuals (optional)
transient separation parameters
temporal shaping data (optional)
$M_{pre}$
$M_{mix}$
$h_{11}$
$h_{21}$
$h_{12}$
$h_{22}$
552
OTT
DRY
WET
optional shaping
554
556
L
R
558
s
530
lattice IIR decorr.
transient separation
s2
s1
510
520
transient decorrelation parameters
transient decorrelator
D1
D2
D
540
transient handling

FIG 5

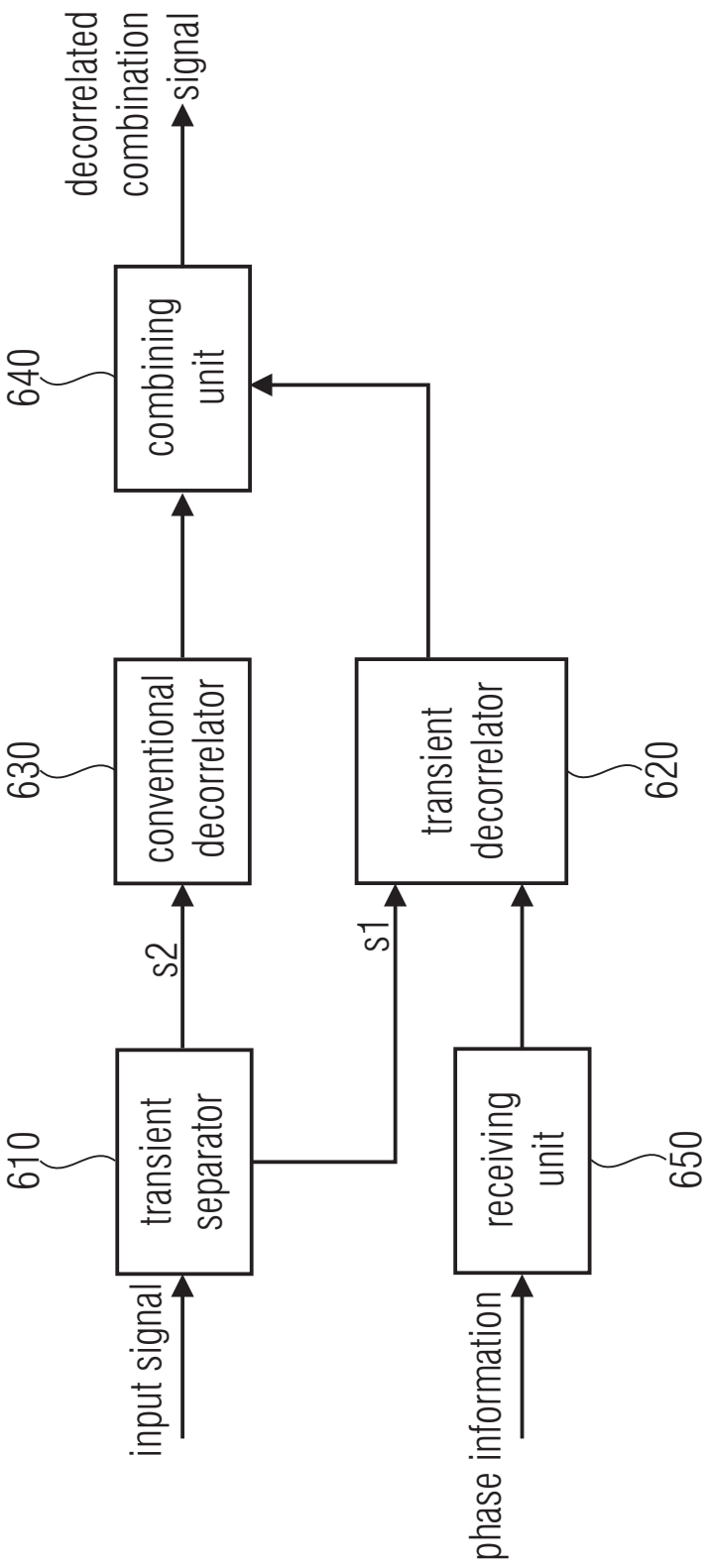
decorrelated combination signal
640
combining unit
630
conventional decorrelator
620
transient decorrelator
s2
s1
610
transient separator
650
receiving unit
input signal
phase information

FIG 6

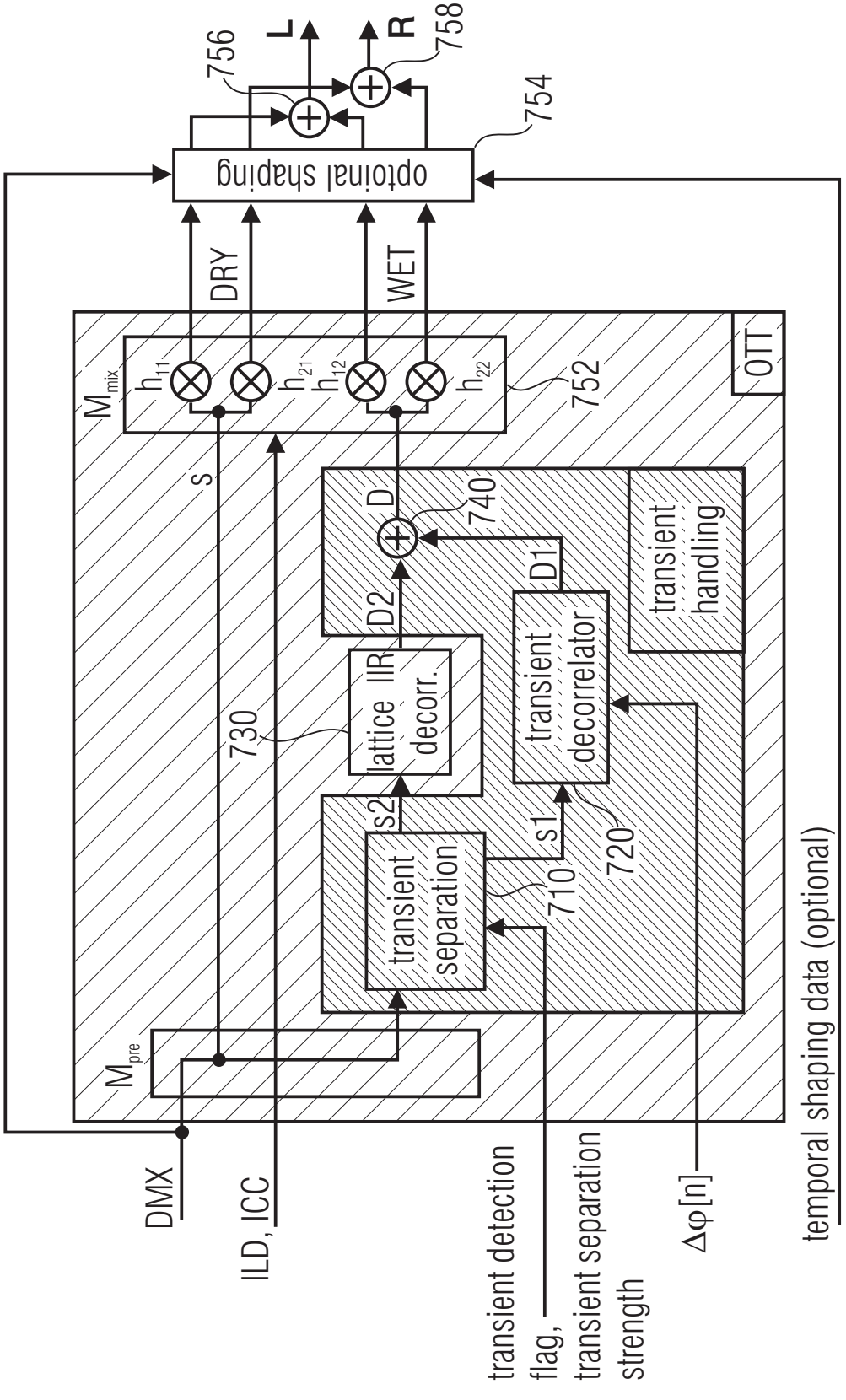
DMX
ILD, ICC
transient detection flag, transient separation strength
Δφ[n]
temporal shaping data (optional)
M_pre
M_mix
h11
h21
h12
h22
752
DRY
WET
optional shaping
754
L
R
756
758
OTT
s
730
lattice IIR decorr.
D2
D
740
D1
transient decorrelator
transient handling
s2
s1
transient separation
710
720

FIG 7

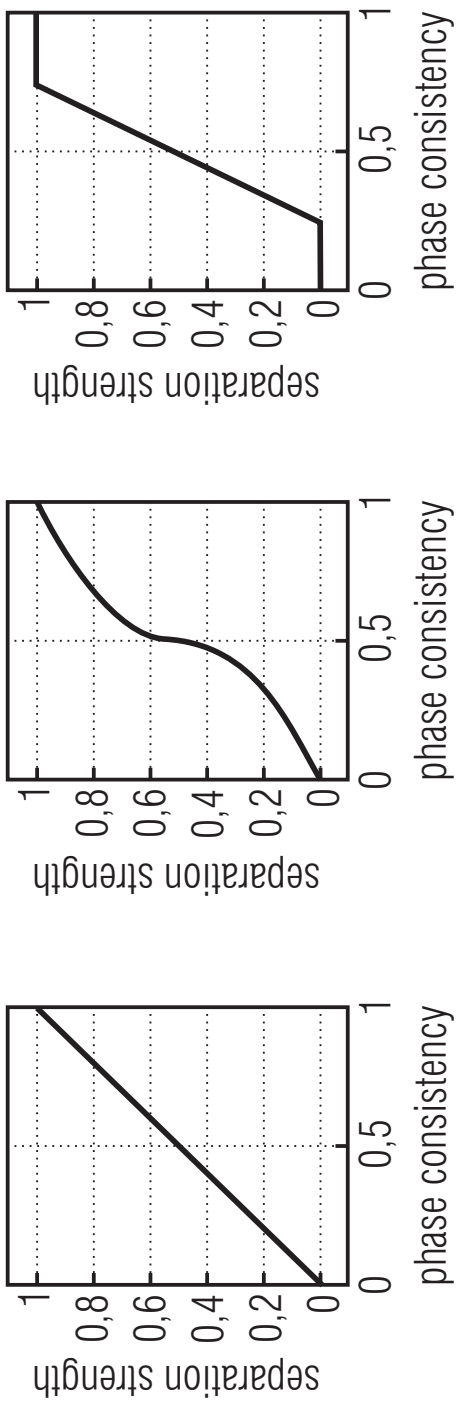
separation strength
0
0,2
0,4
0,6
0,8
1
0
0,5
1
phase consistency
separation strength
0
0,2
0,4
0,6
0,8
1
0
0,5
1
phase consistency
separation strength
0
0,2
0,4
0,6
0,8
1
0
0,5
1
phase consistency

FIG 8

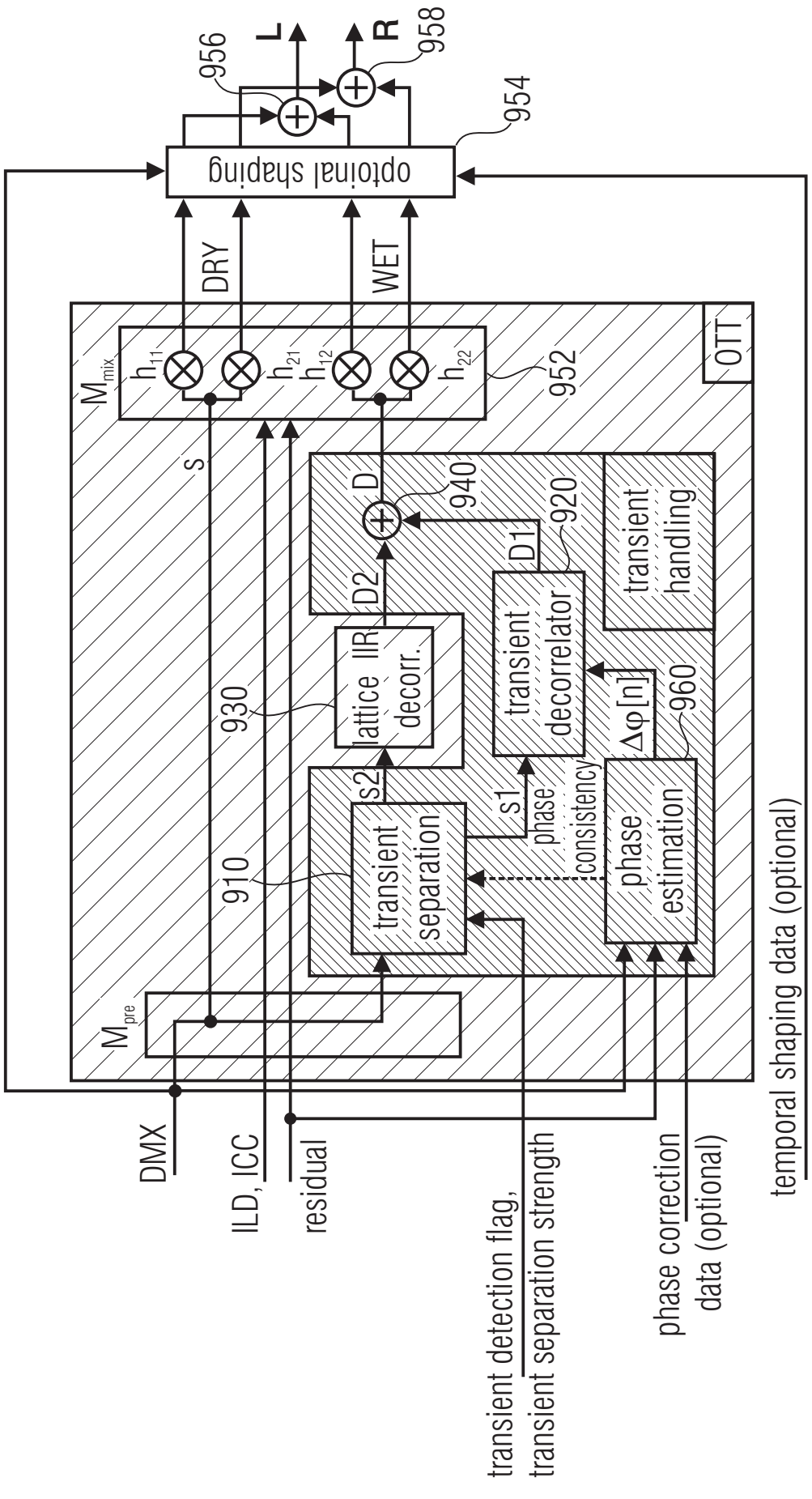
optional shaping
954
956
958
L
R
DRY
WET
OTT
952
$M_{mix}$
$h_{11}$
$h_{21}$
$h_{12}$
$h_{22}$
s
930
910
940
D
D2
D1
920
lattice IIR decorr.
transient separation
s2
s1
phase consistency
transient decorrelator
transient handling
$\Delta\varphi[n]$
960
phase estimation
$M_{pre}$
DMX
ILD, ICC
residual
transient detection flag,
transient separation strength
phase correction data (optional)
temporal shaping data (optional)

FIG 9

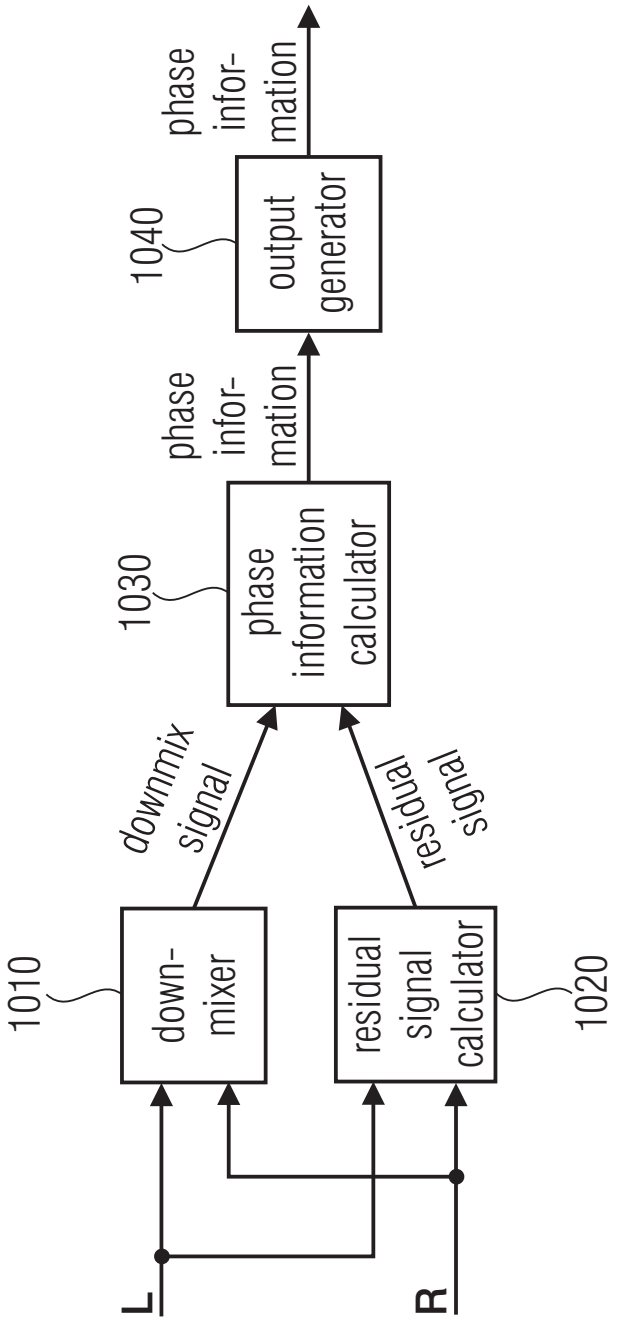
L
R
1010
down-mixer
1020
residual signal calculator
downmix signal
residual signal
1030
phase information calculator
phase infor-mation
1040
output generator
phase infor-mation

FIG 10