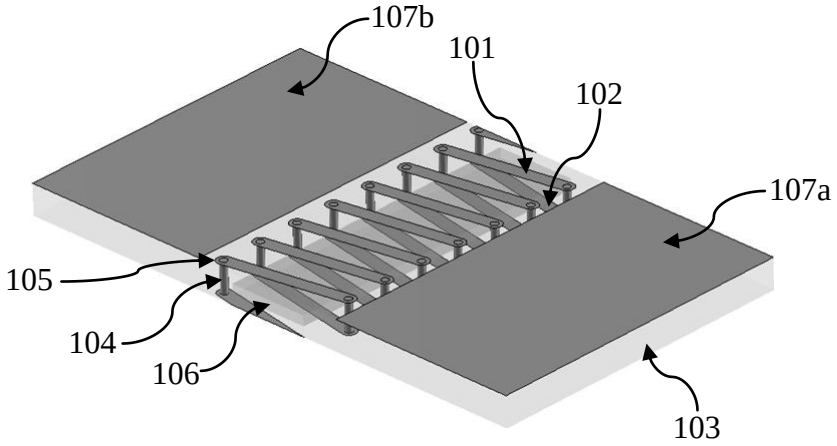

Perspective view of the planar helix with straight-edge connections.

FIG. 1

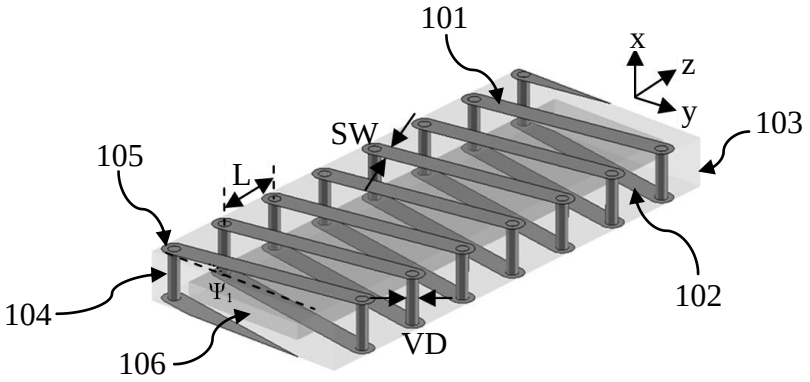

Enlarged view of the planar helix with straight-edge connections.

FIG. 2

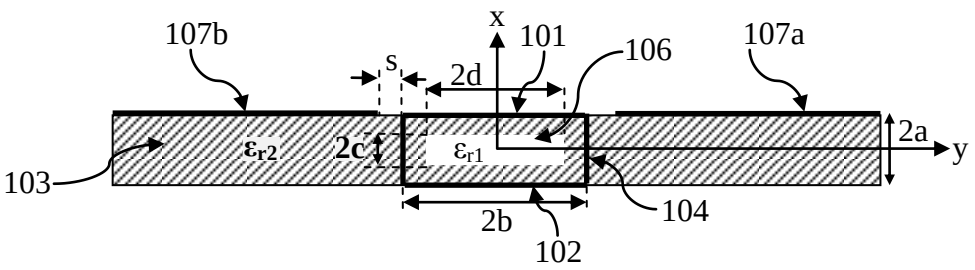

Cross section view of the planar helix with straight-edge connections.

FIG. 3

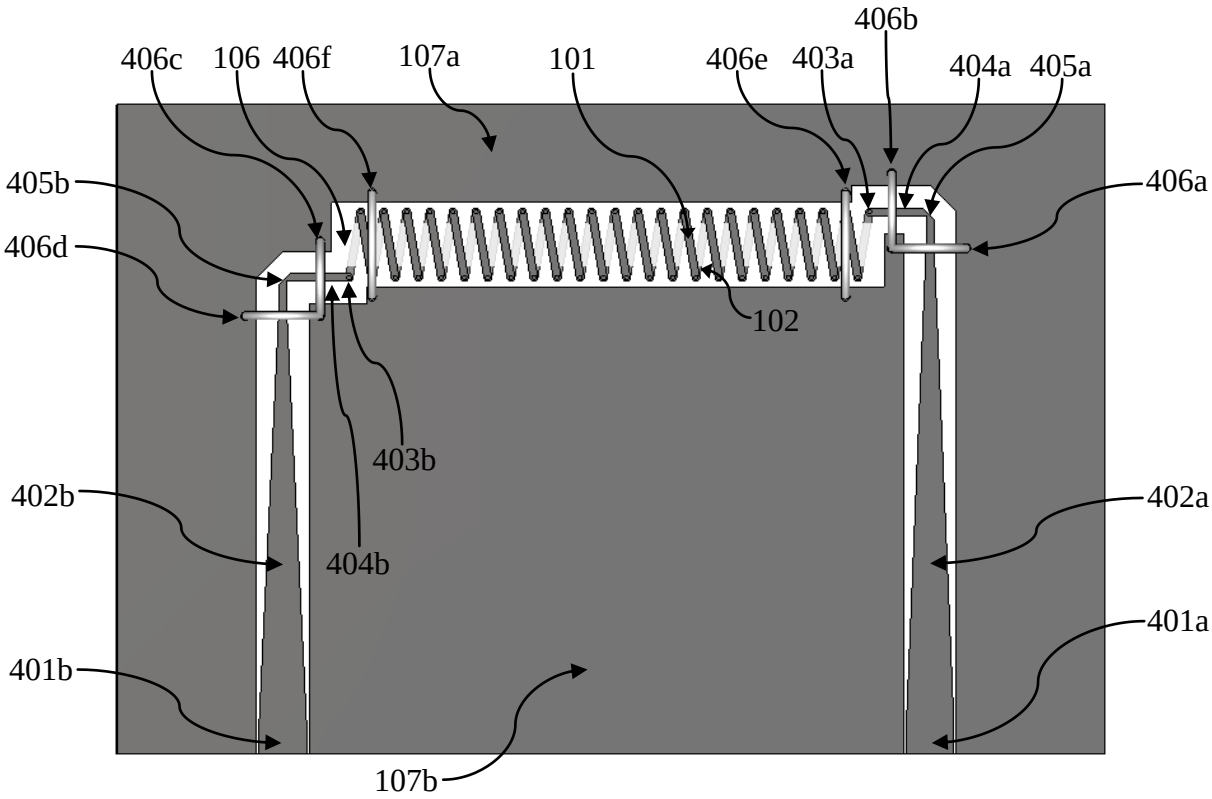

Top view of the proposed structure integrated with coplanar waveguide (CPW) feed.

FIG. 4

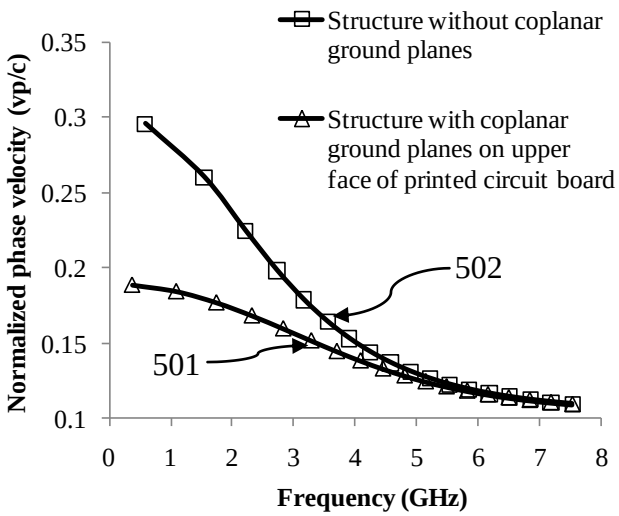

Simulated phase velocity for the embodiment with coplanar ground planes on the top face of the printed circuit board and without coplanar ground planes.

FIG. 5A

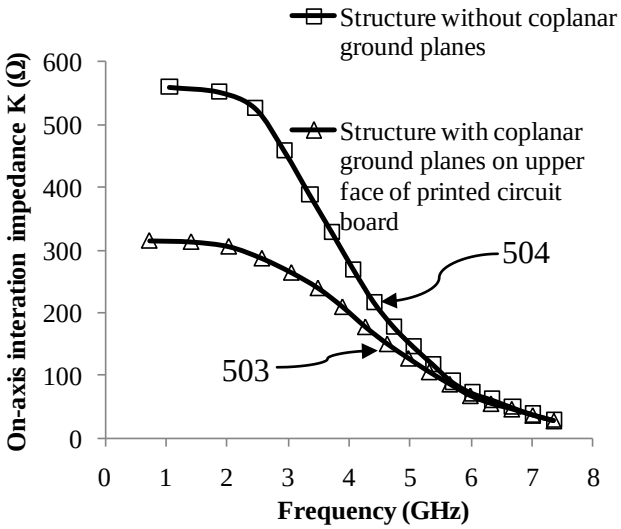

Simulated on-axis interaction impedance for the embodiment with coplanar ground planes on the top face of the printed circuit board and without coplanar ground planes.

FIG. 5B

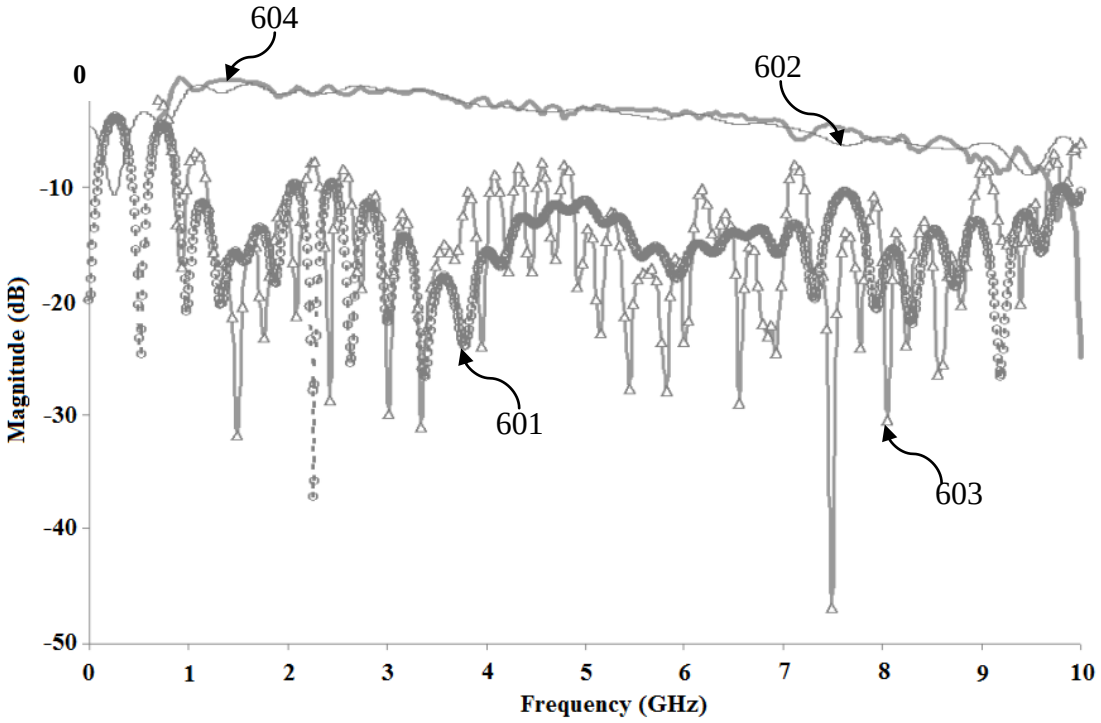

Measured and simulated S parameters of the embodiment with coplanar ground planes on the top face of the printed circuit board integrated with 50Ω CPW feed.

FIG. 6

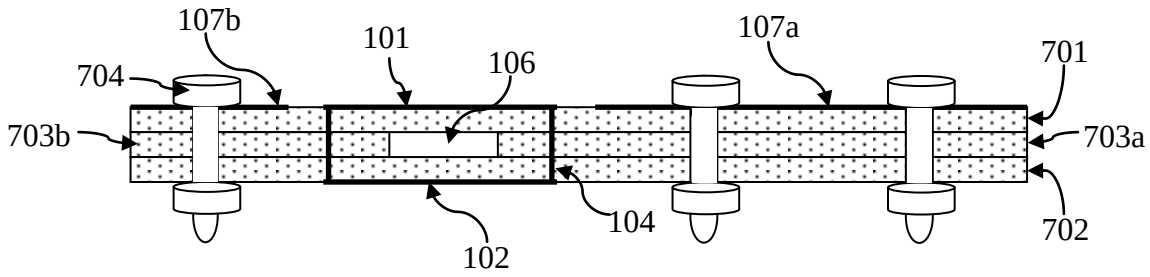

Cross section view of the fabricated embodiment.

FIG. 7

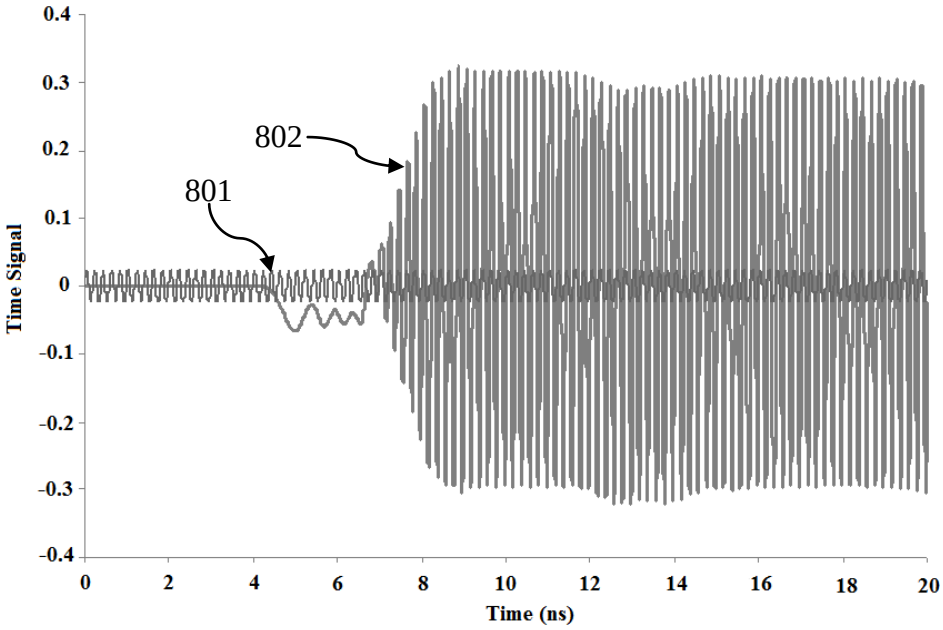

Evidence of traveling wave amplification at 5GHz → Input and output signals vs. time.

FIG. 8