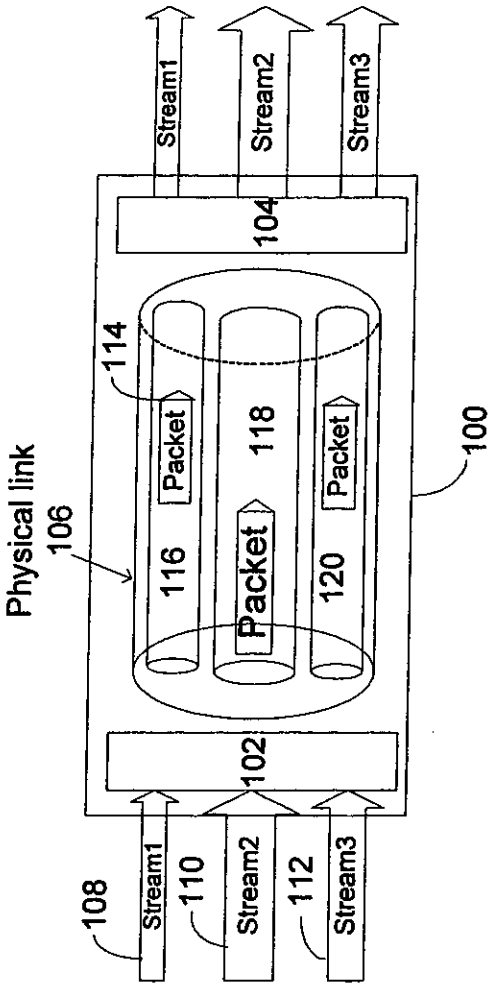
Stream1
Stream2
Stream3
104
114
Packet
118
Packet
Packet
116
120
100
Physical link
106
102
108
Stream1
110
Stream2
112
Stream3

Fig. 1

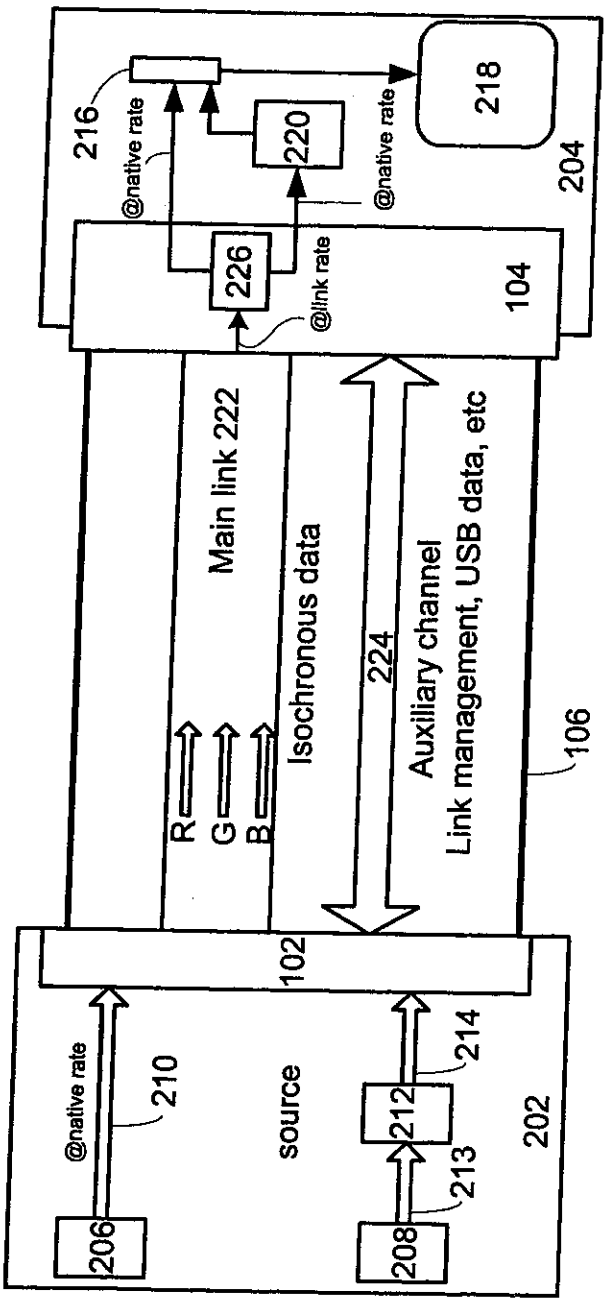
216
@native rate
220
@native rate
218
204
226
@link rate
104
Main link 222
Isochronous data
224
Auxiliary channel
Link management, USB data, etc
106
R
G
B
102
@native rate
210
source
212
214
213
202
206
208

200

Fig. 2A

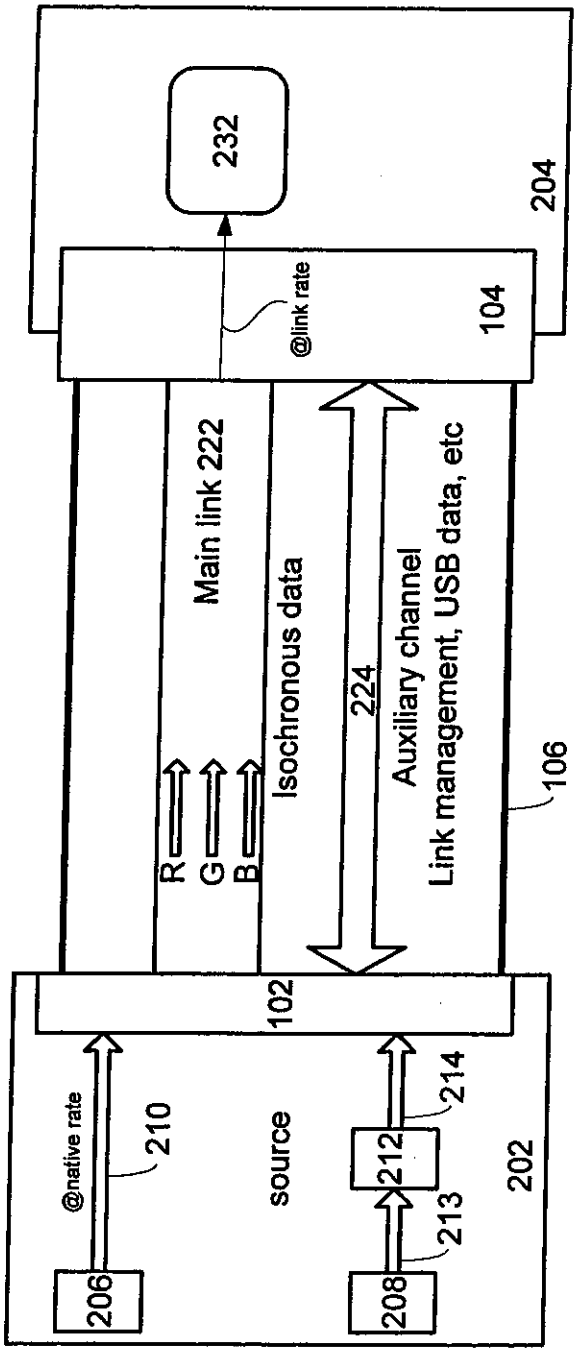
232
204
@link rate
104
Main link 222
Isochronous data
224
Auxiliary channel
Link management, USB data, etc
106
R
G
B
102
@native rate
210
source
212
214
213
202
206
208

230

Fig. 2B

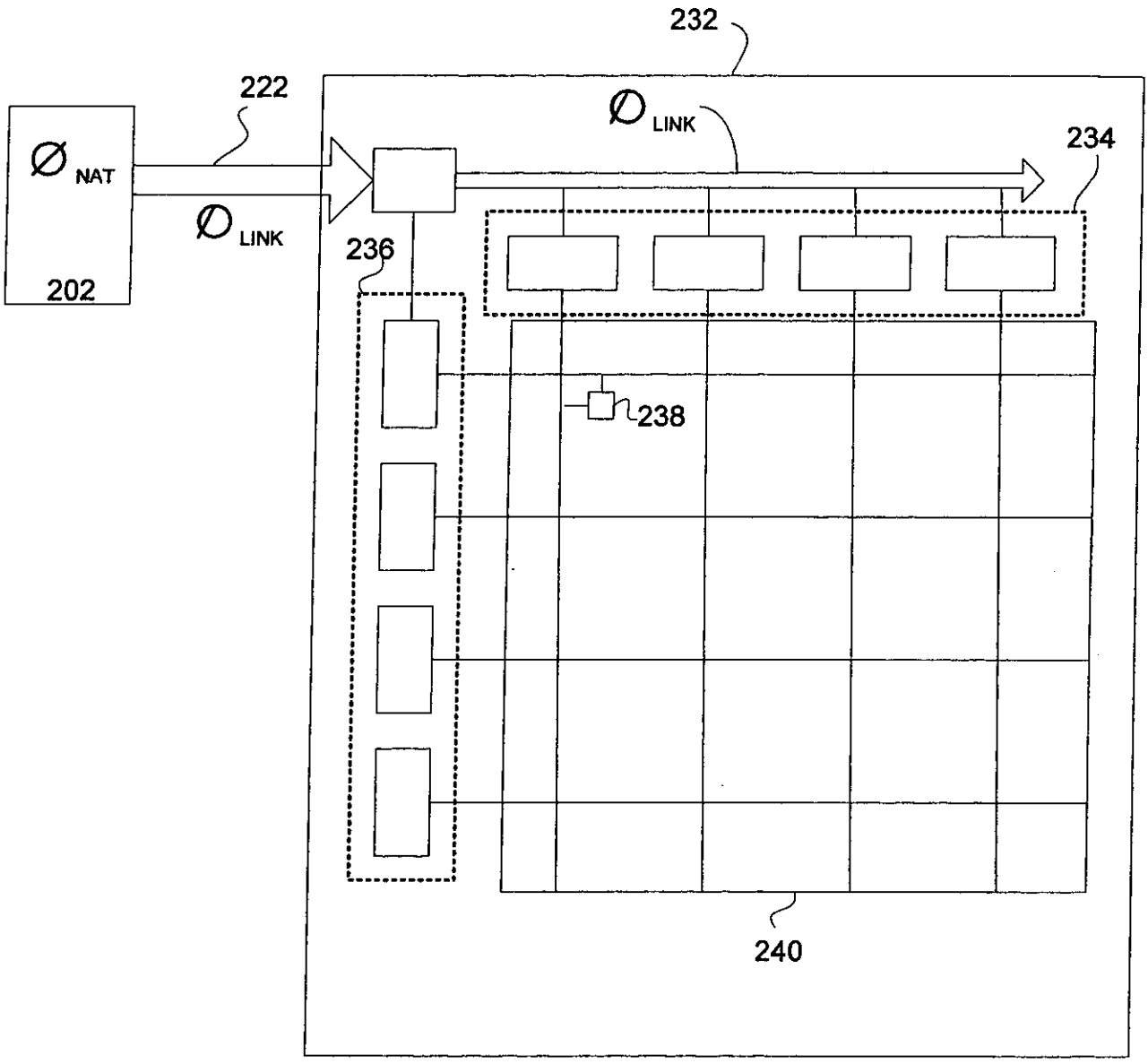

Fig. 2C

Main Link Data Rates

Nominal Baud Rate per channel (Gbits/second)	Actual Baud Rate per channel (Gbits/second)	Clock Multiplication Factor from 24-MHz crystal
1.0	0.960	x40
1.35	1.344	x56
1.7	1.728	x72
2.1	2.112	x88
2.5	2.496	x104

Fig. 3

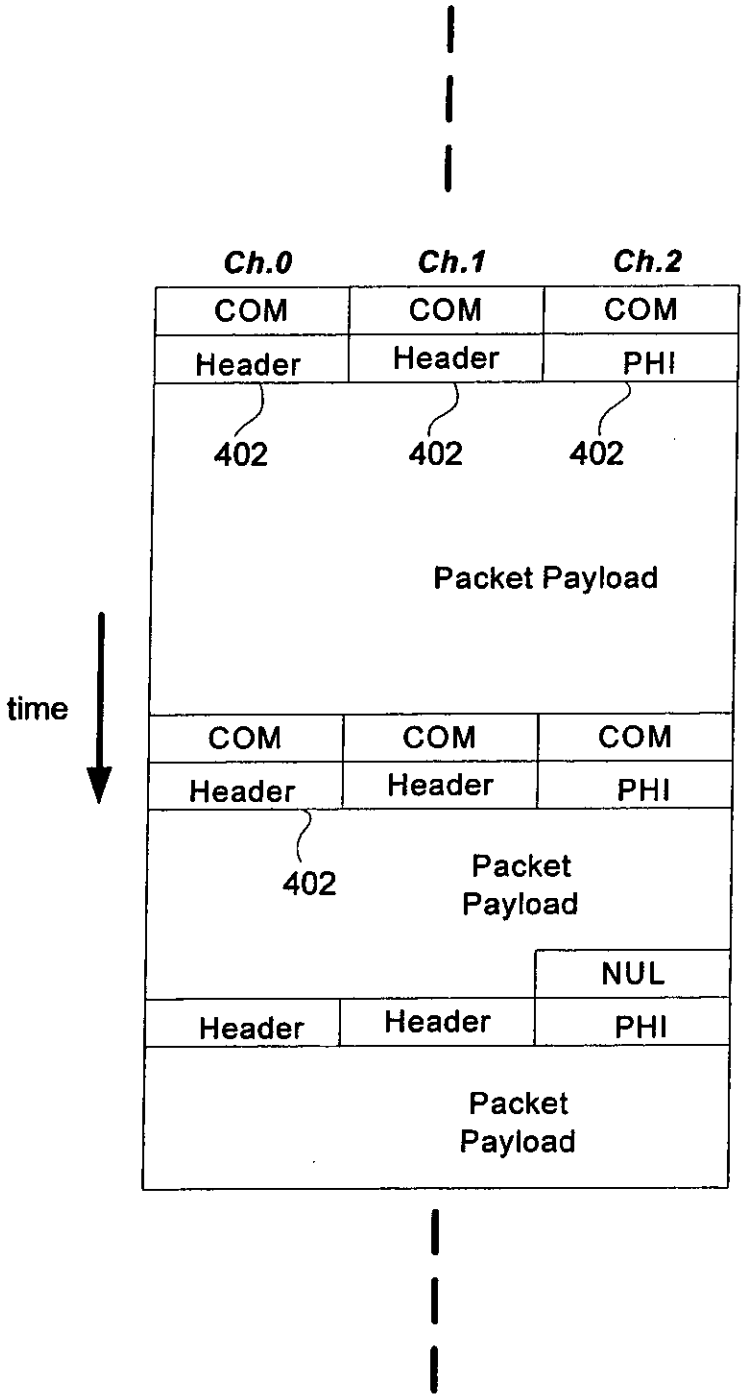

Fig. 4A

Main Link Packet Format

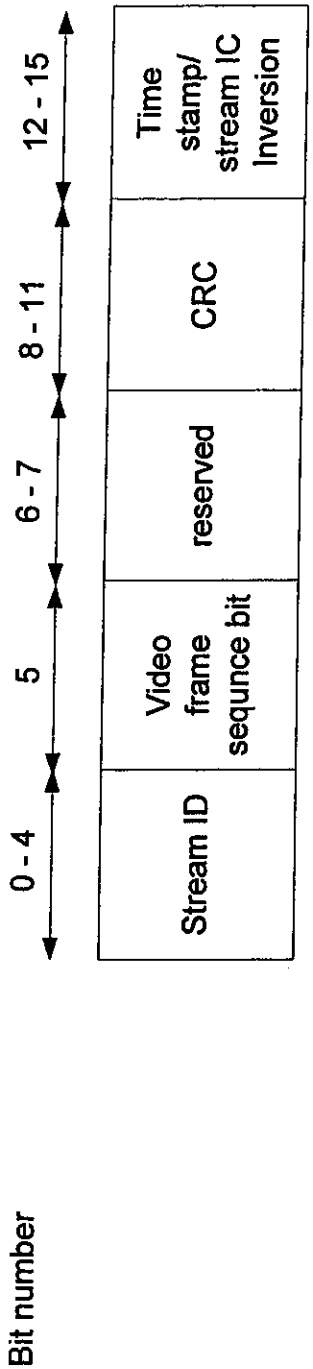
Bit number
0 - 4
5
6 - 7
8 - 11
12 - 15
Stream ID
Video frame sequnce bit
reserved
CRC
Time stamp/ stream IC Inversion

Fig. 4B

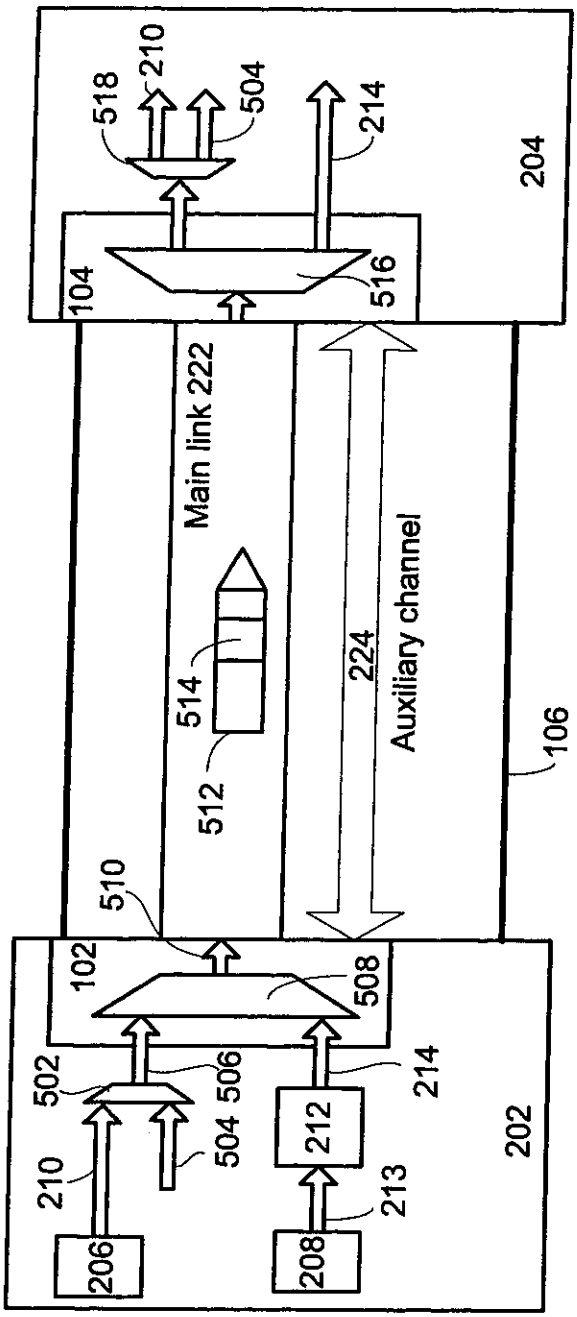
518
210
504
214
204
104
516
Main link 222
514
512
224
Auxiliary channel
106
510
102
508
502
506
214
504
212
210
213
206
208
202

500

Fig. 5A

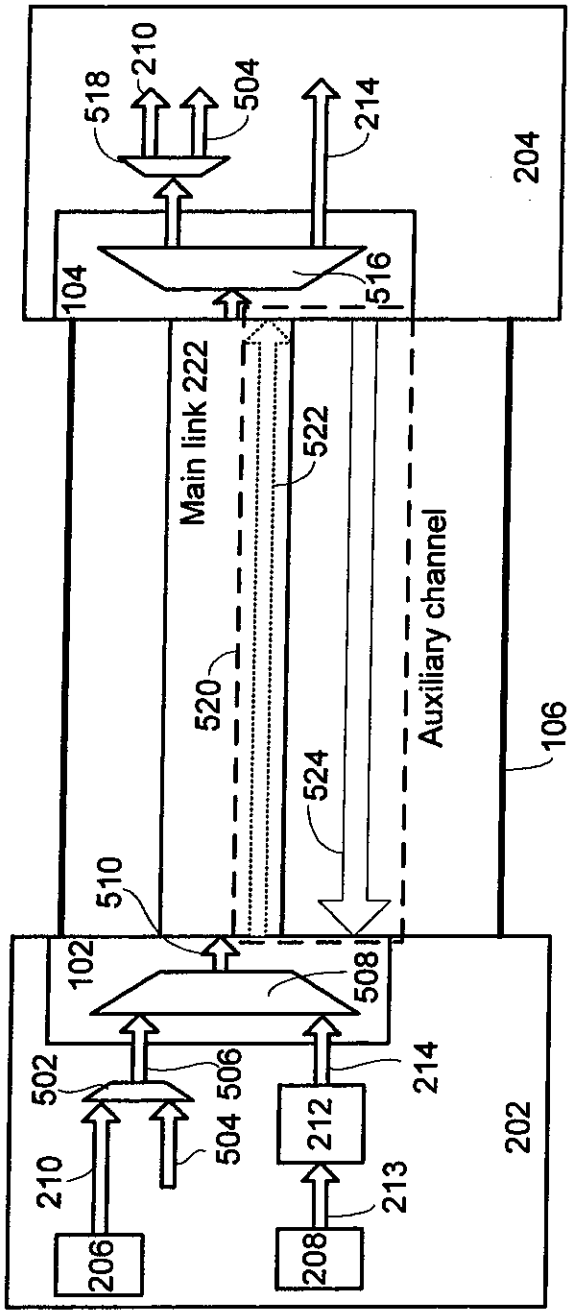
518
210
504
214
204
104
516
Main link 222
522
520
524
Auxiliary channel
106
510
102
508
502
506
214
504
212
210
213
206
208
202

500

Fig. 5B

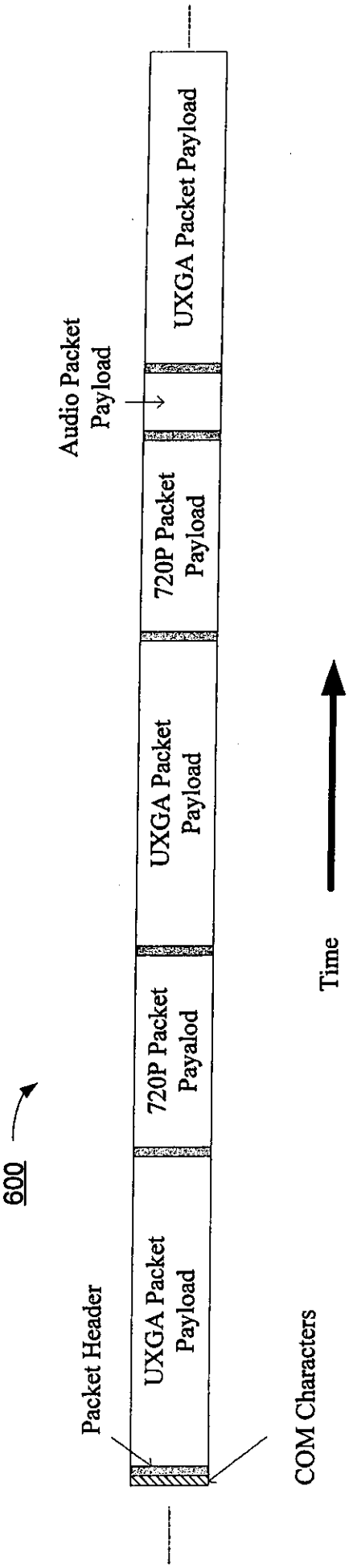

Fig. 6

High-level diagram of link traffic example with three streams

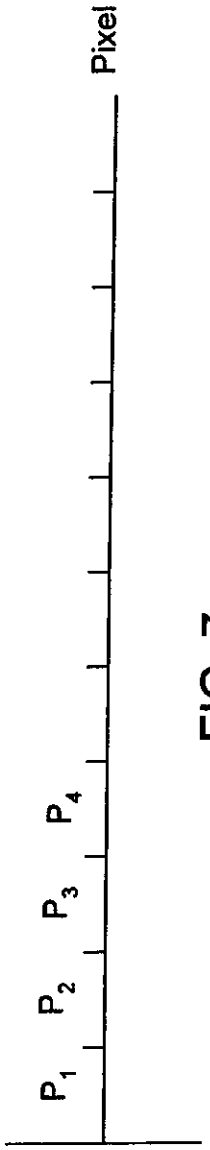

FIG. 7

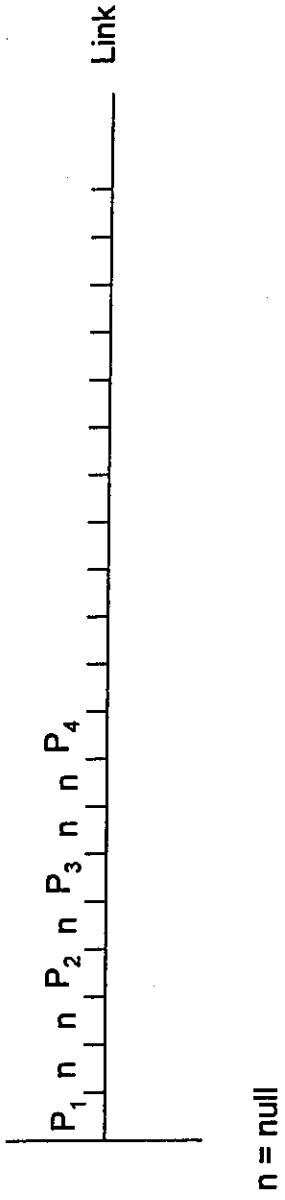

FIG. 8

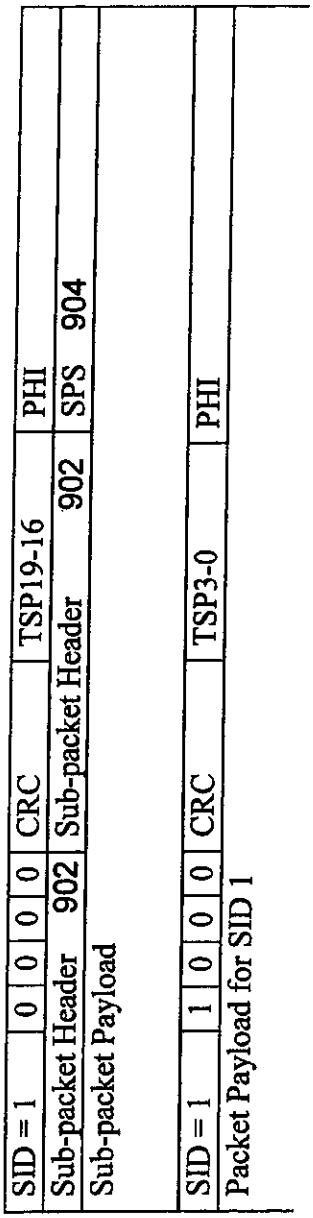
SID = 1
0 0 0 0
CRC
TSP19-16
PHI
Sub-packet Header 902
Sub-packet Header 902
SPS 904
Sub-packet Payload
SID = 1
1 0 0 0
CRC
TSP3-0
PHI
Packet Payload for SID 1

Fig. 9A

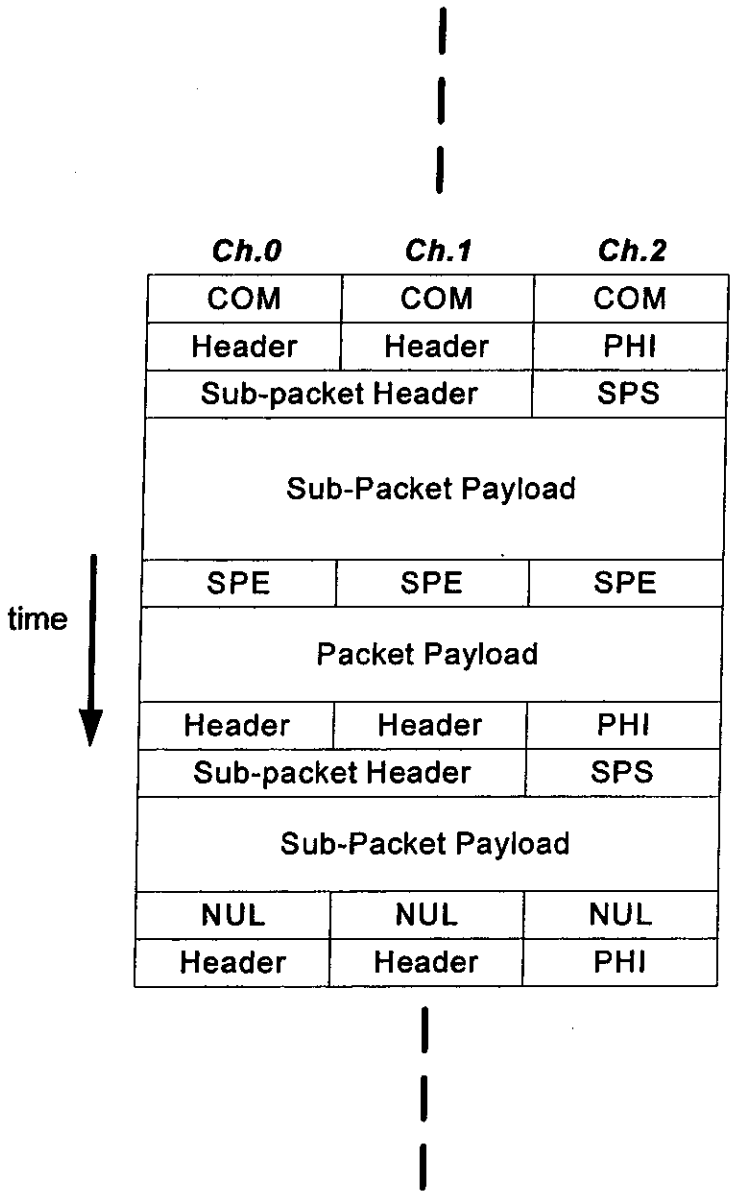
Ch.0
Ch.1
Ch.2
COM
COM
COM
Header
Header
PHI
Sub-packet Header
SPS
Sub-Packet Payload
SPE
SPE
SPE
Packet Payload
Header
Header
PHI
Sub-packet Header
SPS
Sub-Packet Payload
NUL
NUL
NUL
Header
Header
PHI
time

Fig. 9B

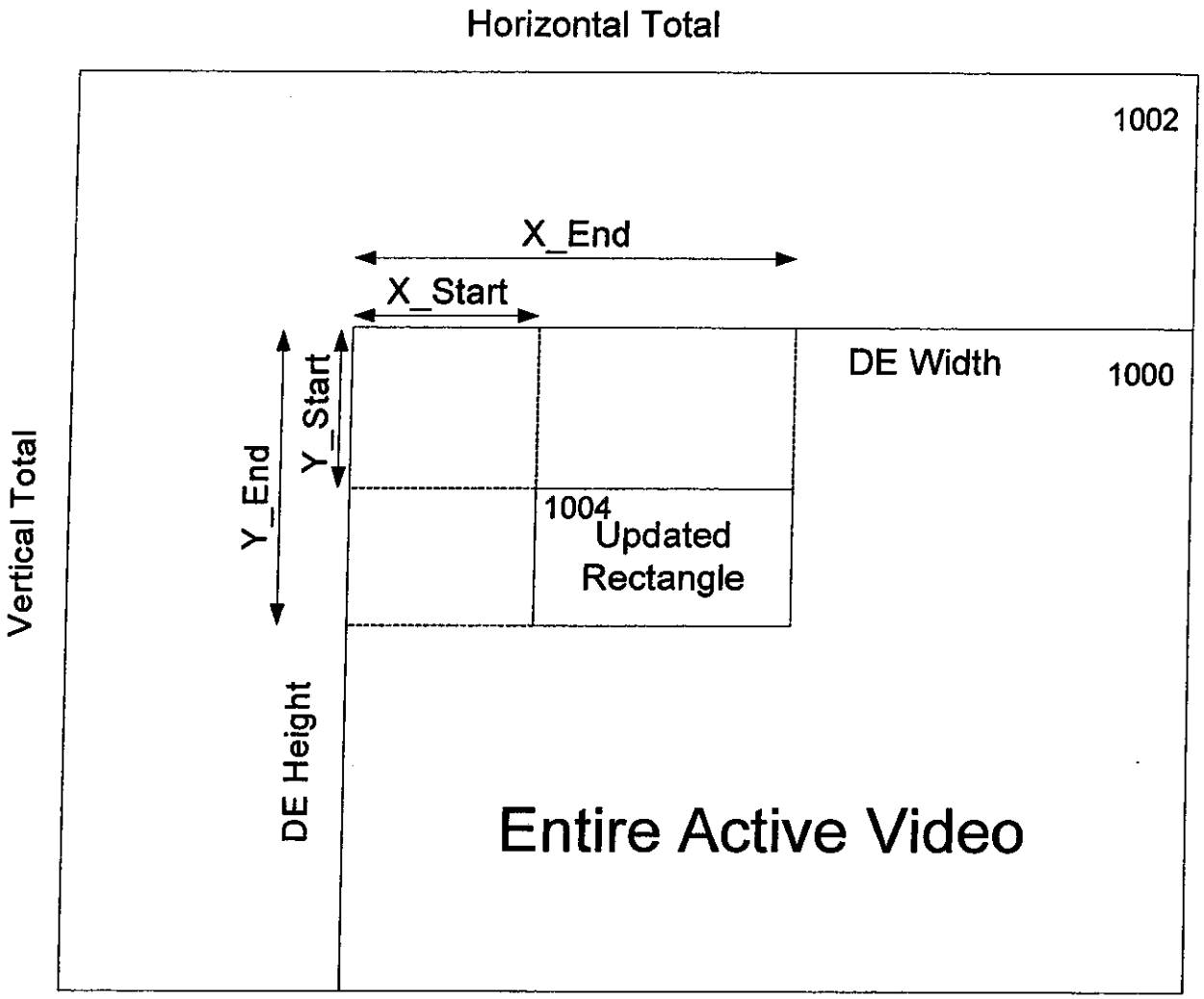
Horizontal Total
1002
X_End
X_Start
DE Width
1000
Y_Start
Y_End
Vertical Total
1004
Updated
Rectangle
DE Height
Entire Active Video

Fig. 10

Phase	Transmitted Link Characters	Binary pattern
1	D10.2	0101010101 0101010101 0101010101 0101010101 0101010101
2	K28.7	0011111000 0011111000 0011111000 0011111000 0011111000
3	K28.5, and three D10.2	0011111010 0101010101 0101010101 0101010101 1100000101

Main Link Training Pattern

Fig. 11

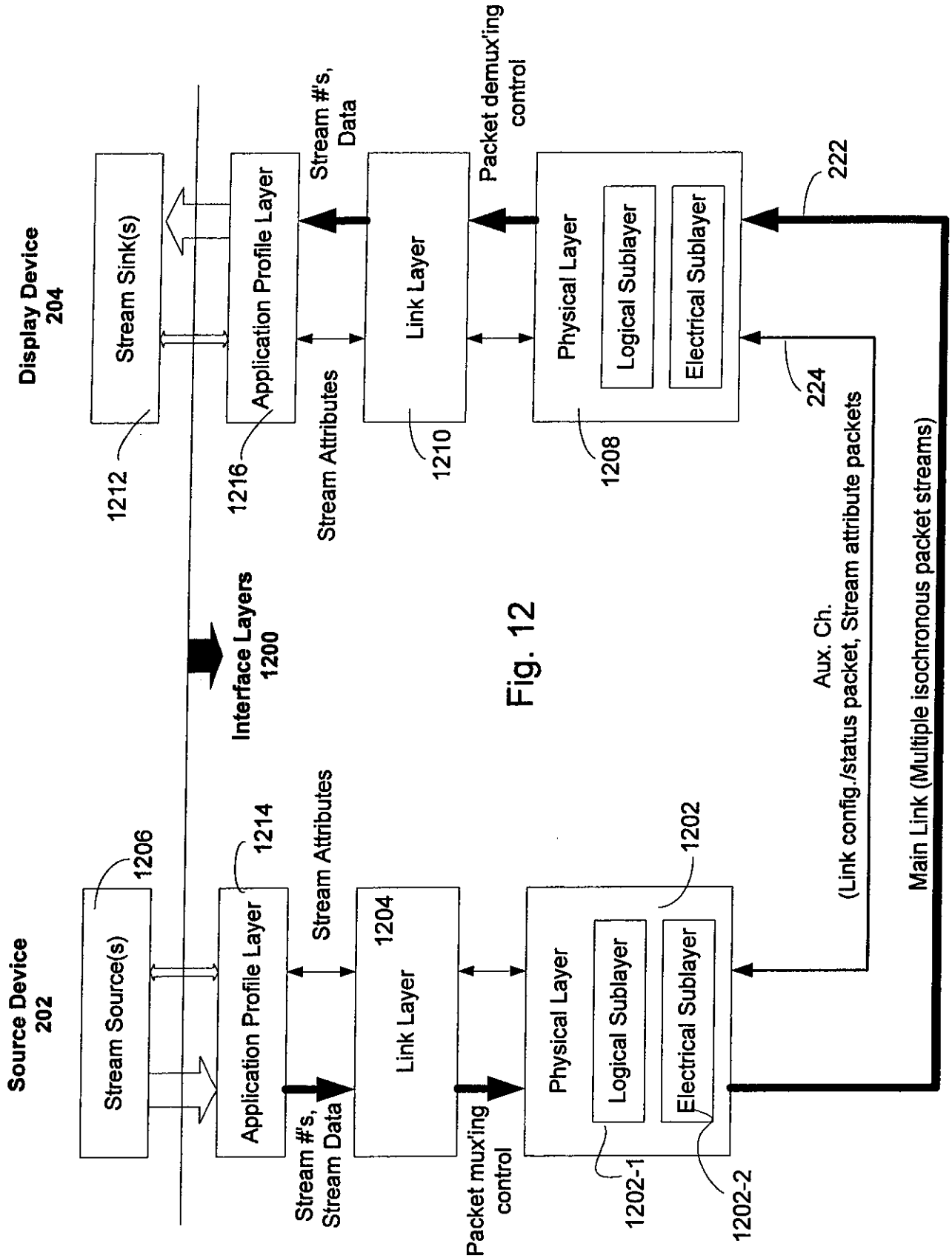
Source Device
202
Display Device
204
Stream Source(s)
1206
Application Profile Layer
1214
Stream Attributes
Link Layer
1204
Physical Layer
Logical Sublayer
Electrical Sublayer
1202
1202-1
1202-2
Stream #'s,
Stream Data
Packet mux'ing
control
Interface Layers
1200
Stream Sink(s)
1212
Application Profile Layer
1216
Stream Attributes
Link Layer
1210
Physical Layer
Logical Sublayer
Electrical Sublayer
1208
Stream #'s,
Data
Packet demux'ing
control
222
224
Aux. Ch.
(Link config./status packet, Stream attribute packets
Main Link (Multiple isochronous packet streams)

Fig. 12

8B/10B Special Characters Usage

Encoding	Name	Description
K28.5	Comma (COM)	Inserted between packets. Also used as part of Test Pattern
K28.7	TrainingPattern (TPN)	Sent during Training Pattern transmission for bit/byte clock lock.
K23.7	Null (NUL)	Sent within the packet period when there is no data to transmit.
K28.2	Sub-packet Start (SPS)	Indicate a start of sub-packet inserted in a packet
K29.7	Sub-packet End (SPE)	Indicate an end of sub-packet inserted in a main packet.
K28.0	PacketHeaderIndicator (PHI)	Sent along with 16 bits of header for header identification.
K28.1		Reserved
K28.3		Reserved
K28.4		Reserved
K28.6		Reserved
K25.7		Reserved
K27.7		Reserved

Fig. 13

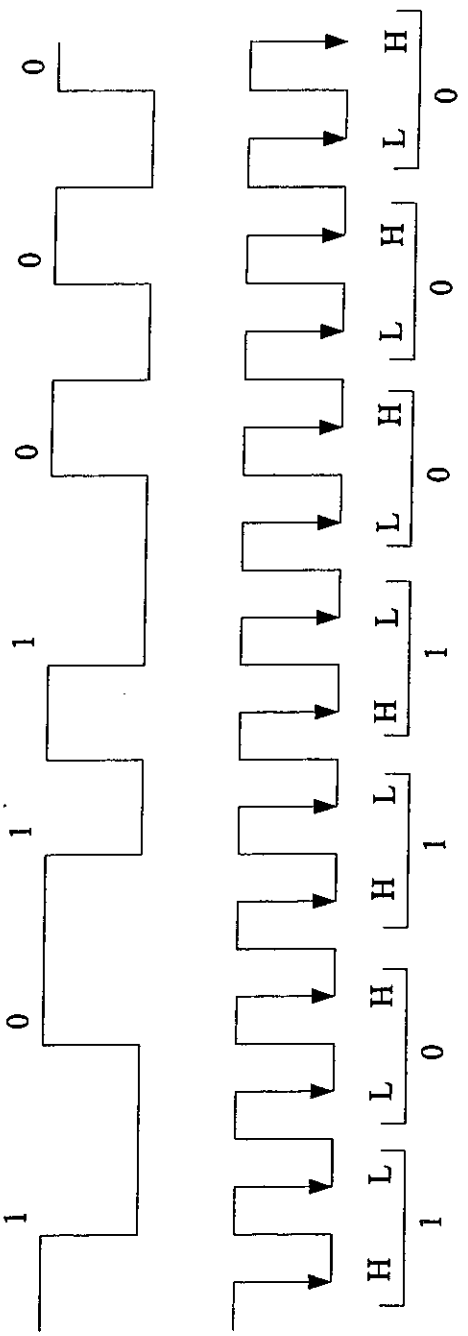
Self-clocked data stream incoming data stream
Receiver local clock phase- locked to data stream
1
0
1
1
0
0
0
H
L
L
H
H
L
H
L
H
L
H
L
1
0
1
1
0
0
A Manchester II-Coded Stream

Fig. 14

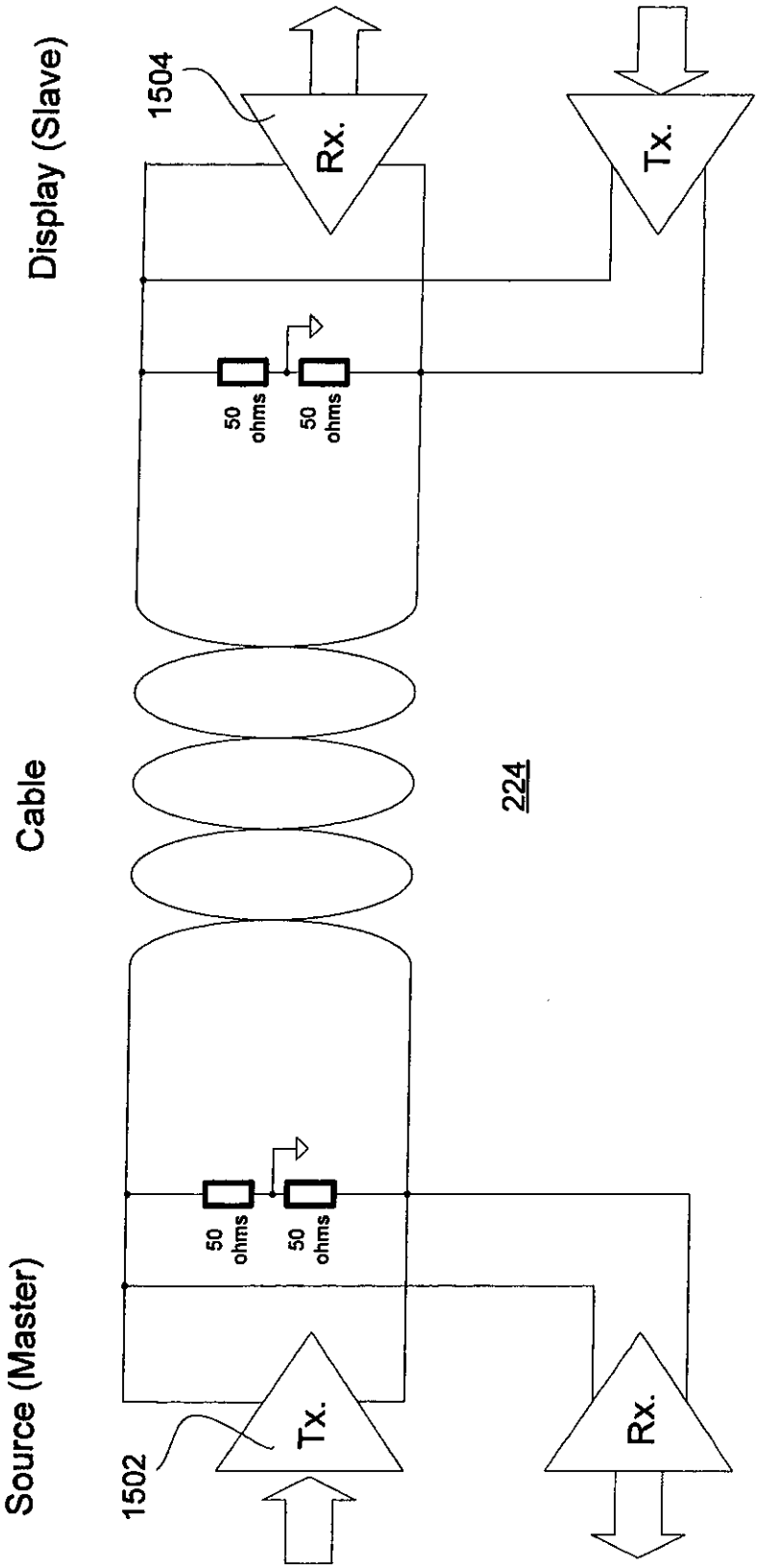
Source (Master)
Cable
Display (Slave)
1502
1504
Tx.
Rx.
50 ohms
50 ohms
Rx.
Tx.
50 ohms
50 ohms
224

Fig. 15

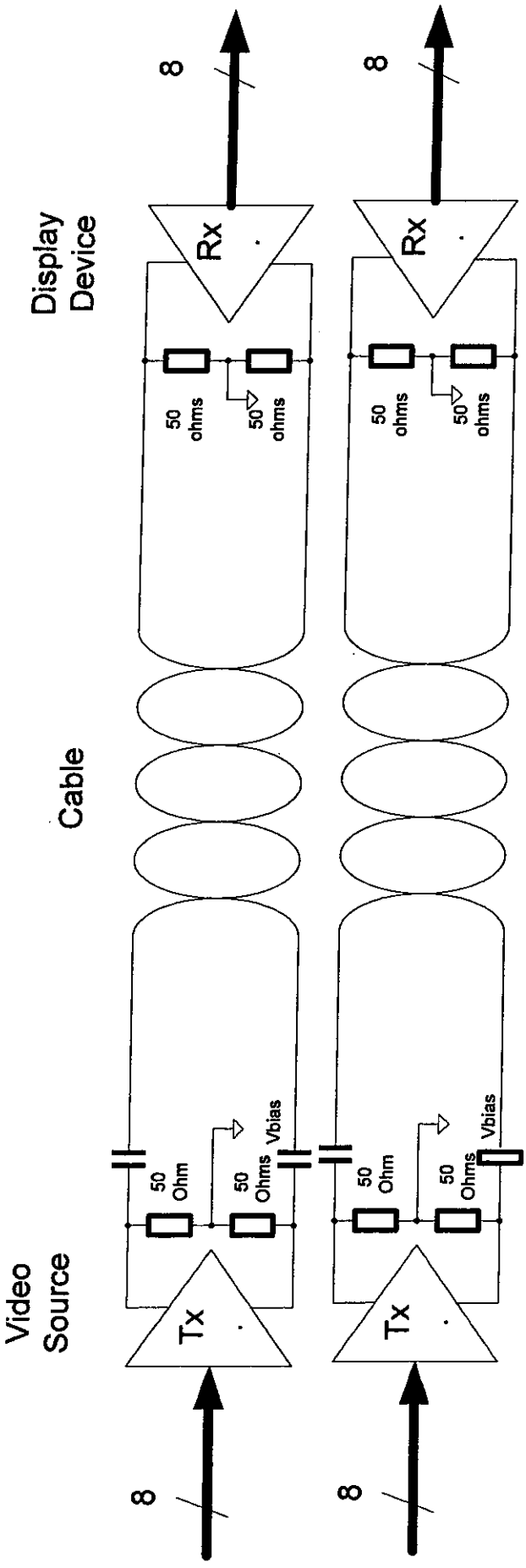
Video Source
Tx
8
50 Ohm
50 Ohms
Vbias
Cable
Display Device
Rx
50 ohms
50 ohms
222

Fig. 16

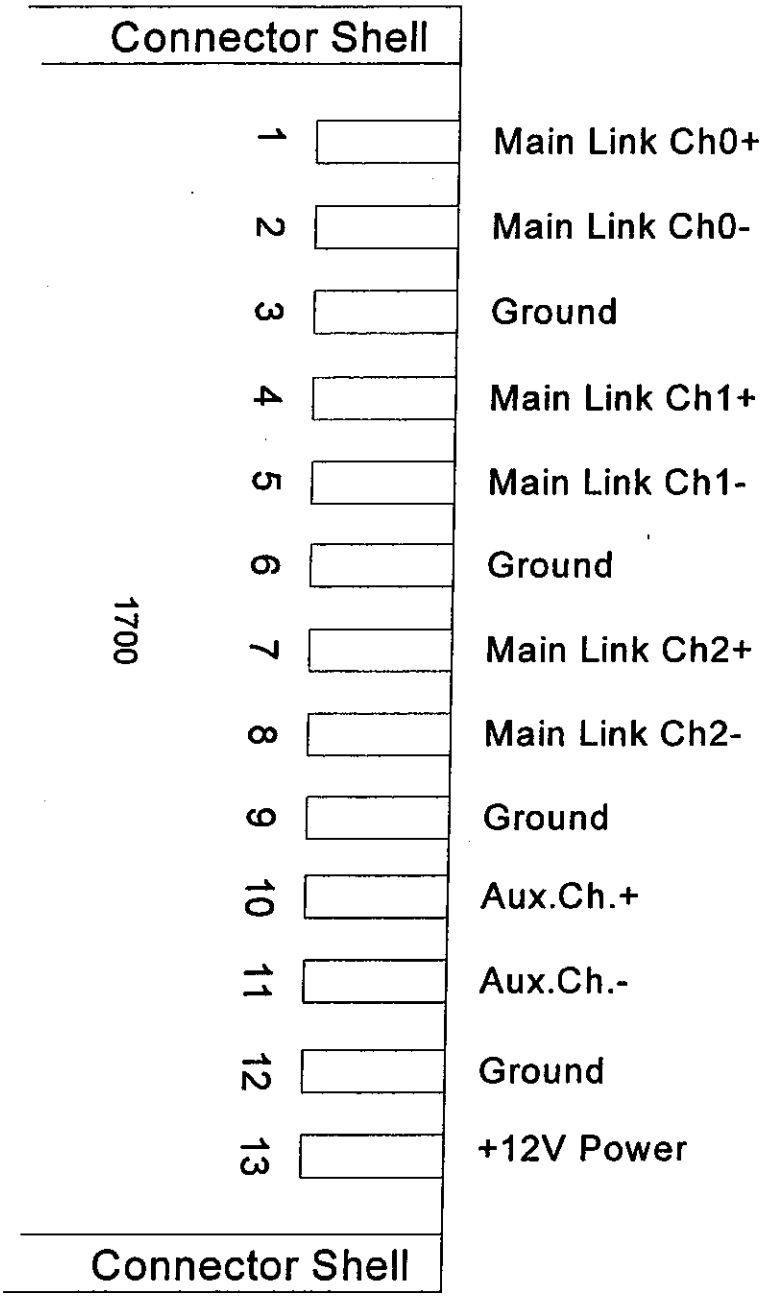
Connector Shell
1
2
3
4
5
6
7
8
9
10
11
12
13
Main Link Ch0+
Main Link Ch0-
Ground
Main Link Ch1+
Main Link Ch1-
Ground
Main Link Ch2+
Main Link Ch2-
Ground
Aux.Ch.+
Aux.Ch.-
Ground
+12V Power
Connector Shell
1700

Fig. 17

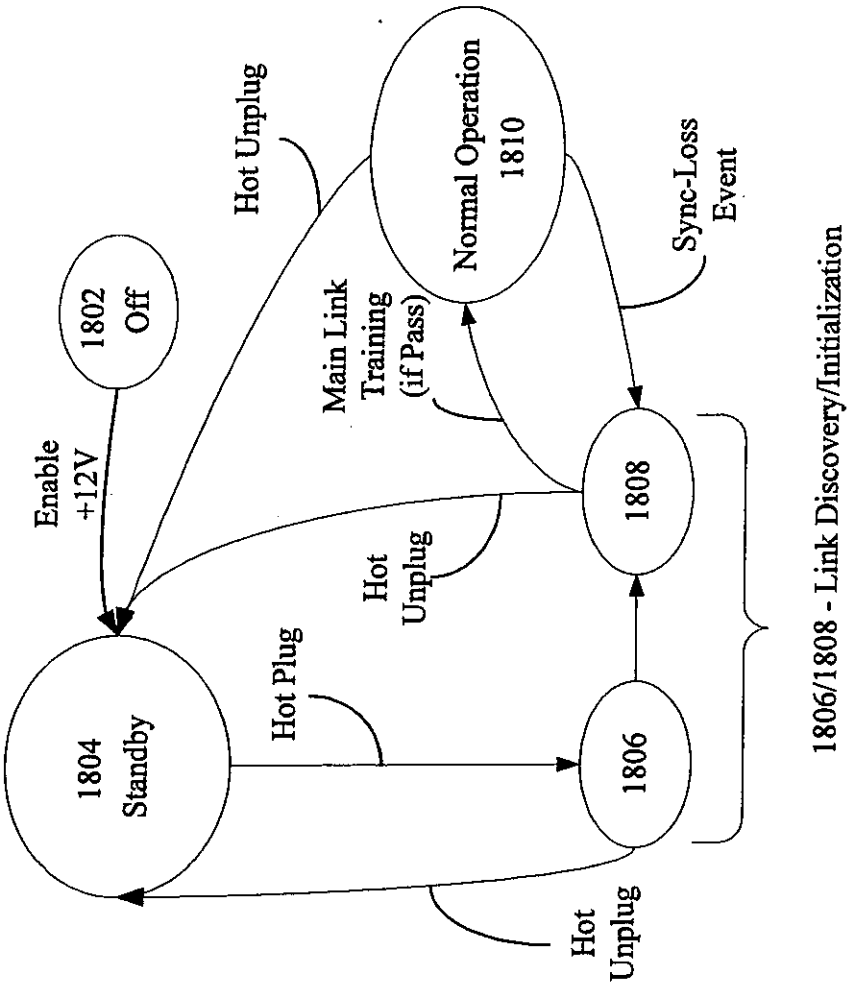
1802
Off
Enable
+12V
1804
Standby
Hot Plug
1806
Hot
Unplug
1808
Main Link
Training
(if Pass)
Normal Operation
1810
Hot Unplug
Sync-Loss
Event
Hot
Unplug
1806/1808 - Link Discovery/Initialization

Fig. 18

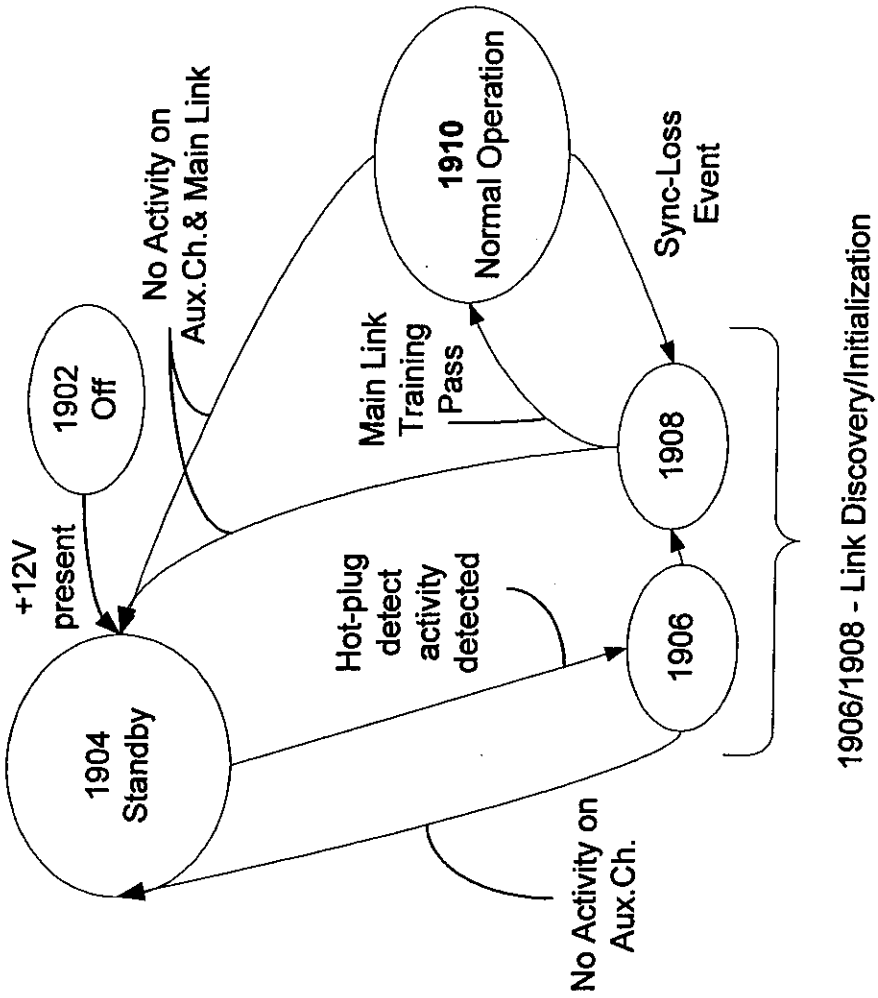
1902
Off
+12V
present
1904
Standby
No Activity on
Aux.Ch.& Main Link
Hot-plug
detect
activity
detected
1906
1908
Main Link
Training
Pass
1910
Normal Operation
Sync-Loss
Event
No Activity on
Aux.Ch.
1906/1908 - Link Discovery/Initialization

Fig. 19

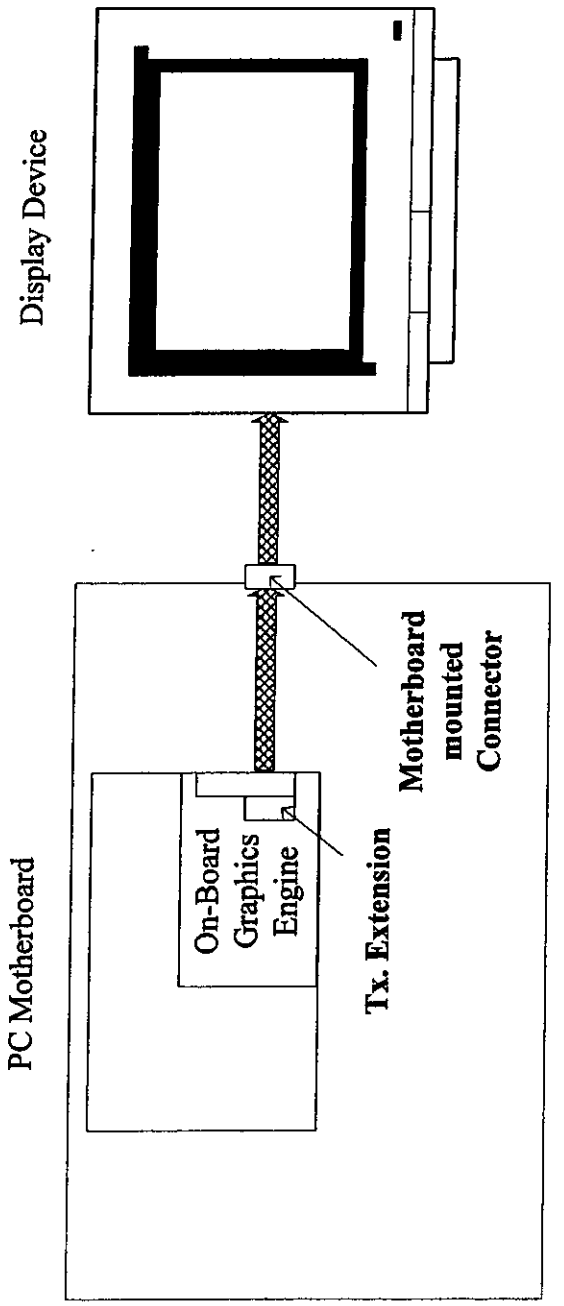

PCI EXPRESS MOTHERBOARD WITH DEDICATED DD-EXPRESS CONNECTOR

Fig. 20

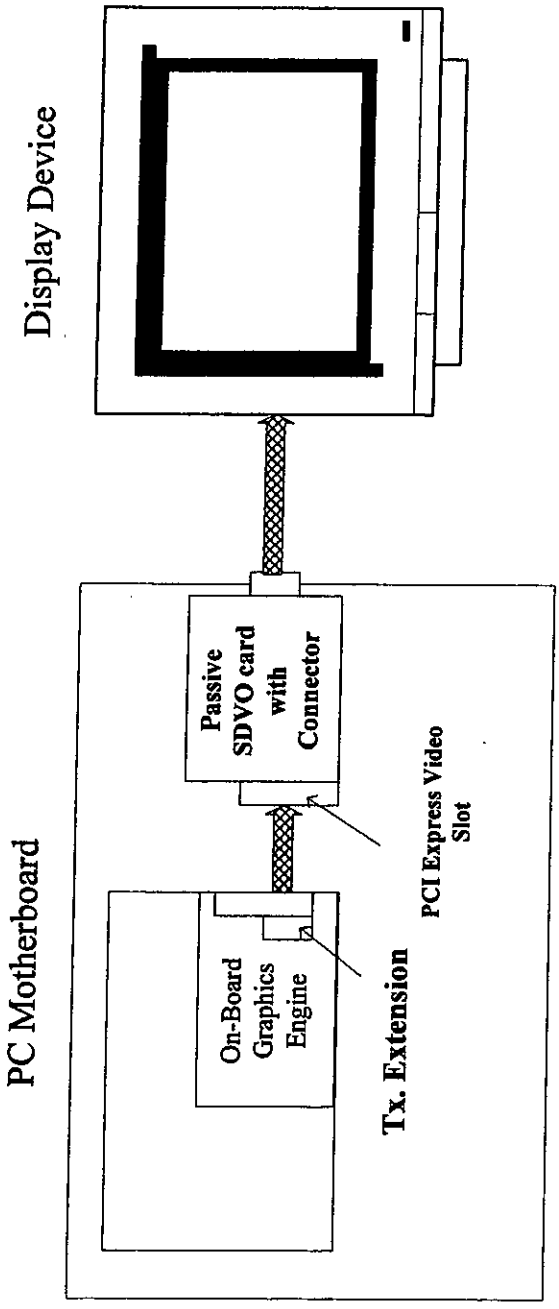

PCI Express motherboard with passive connector card.

Fig. 21

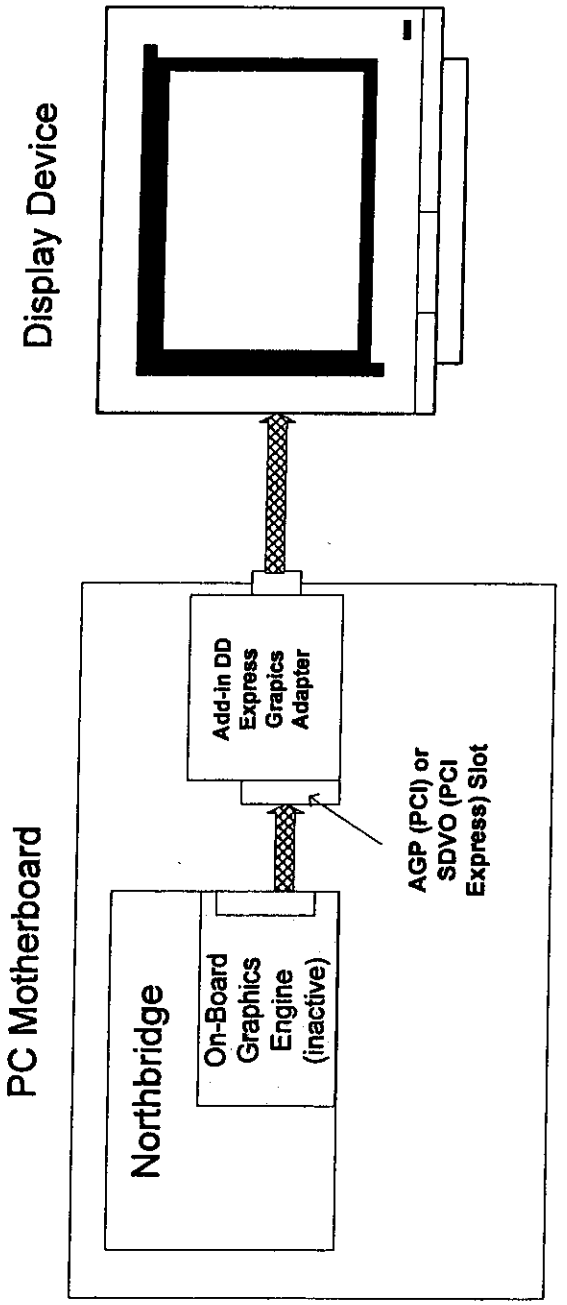

PCI Express motherboard with add-in DD-Express graphics card

Fig. 22

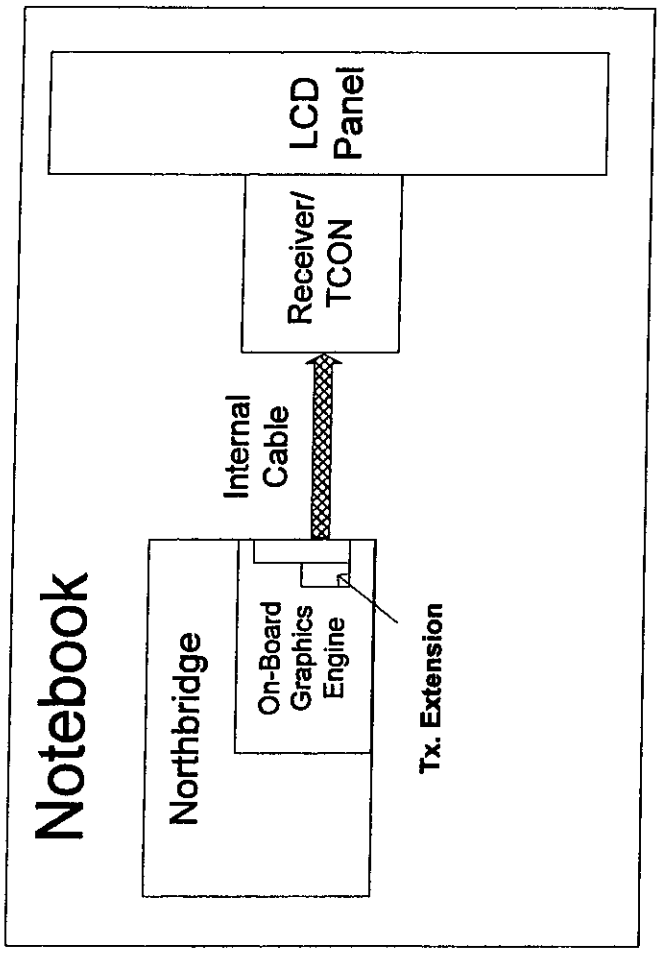
Notebook
Northbridge
On-Board Graphics Engine
Tx. Extension
Internal Cable
Receiver/ TCON
LCD Panel

Fig. 23

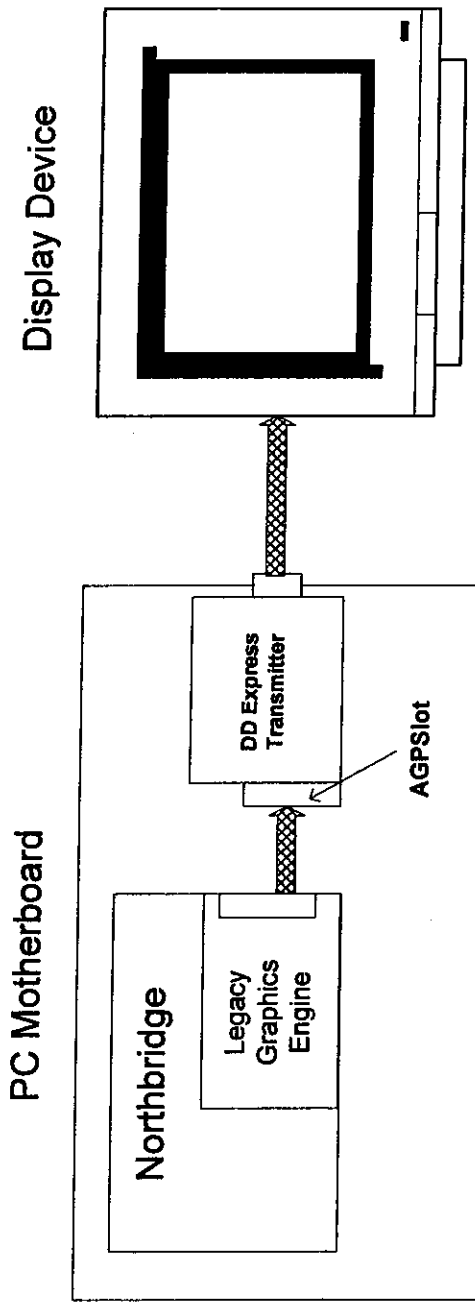

Legacy graphics accelerator bus transmitter mounted on a legacy bus card slot converts digital raster data/timing signals into main link streams

Fig. 24

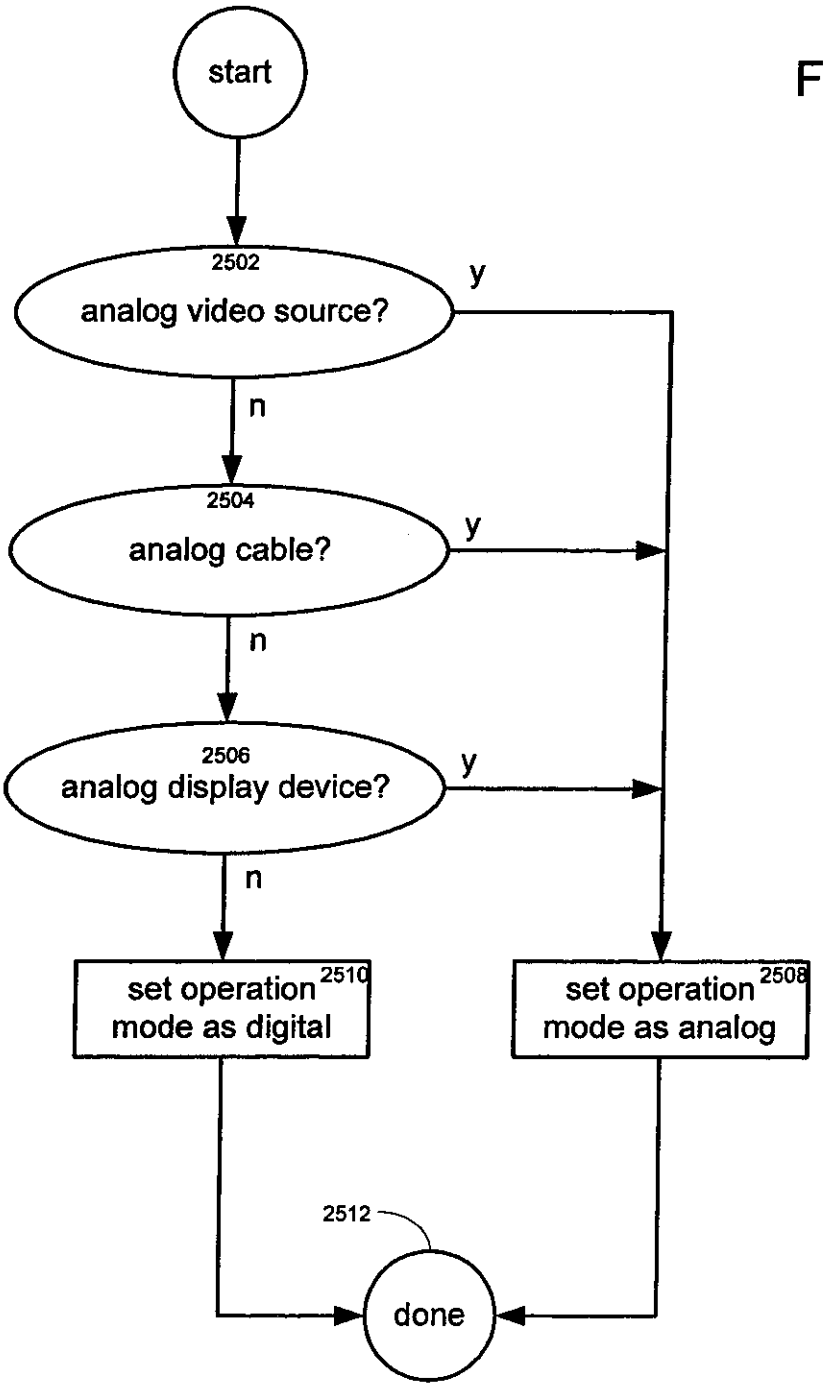
start
2502
analog video source?
y
n
2504
analog cable?
y
n
2506
analog display device?
y
n
set operation mode as digital
2510
set operation mode as analog
2508
2512
done

Fig. 25

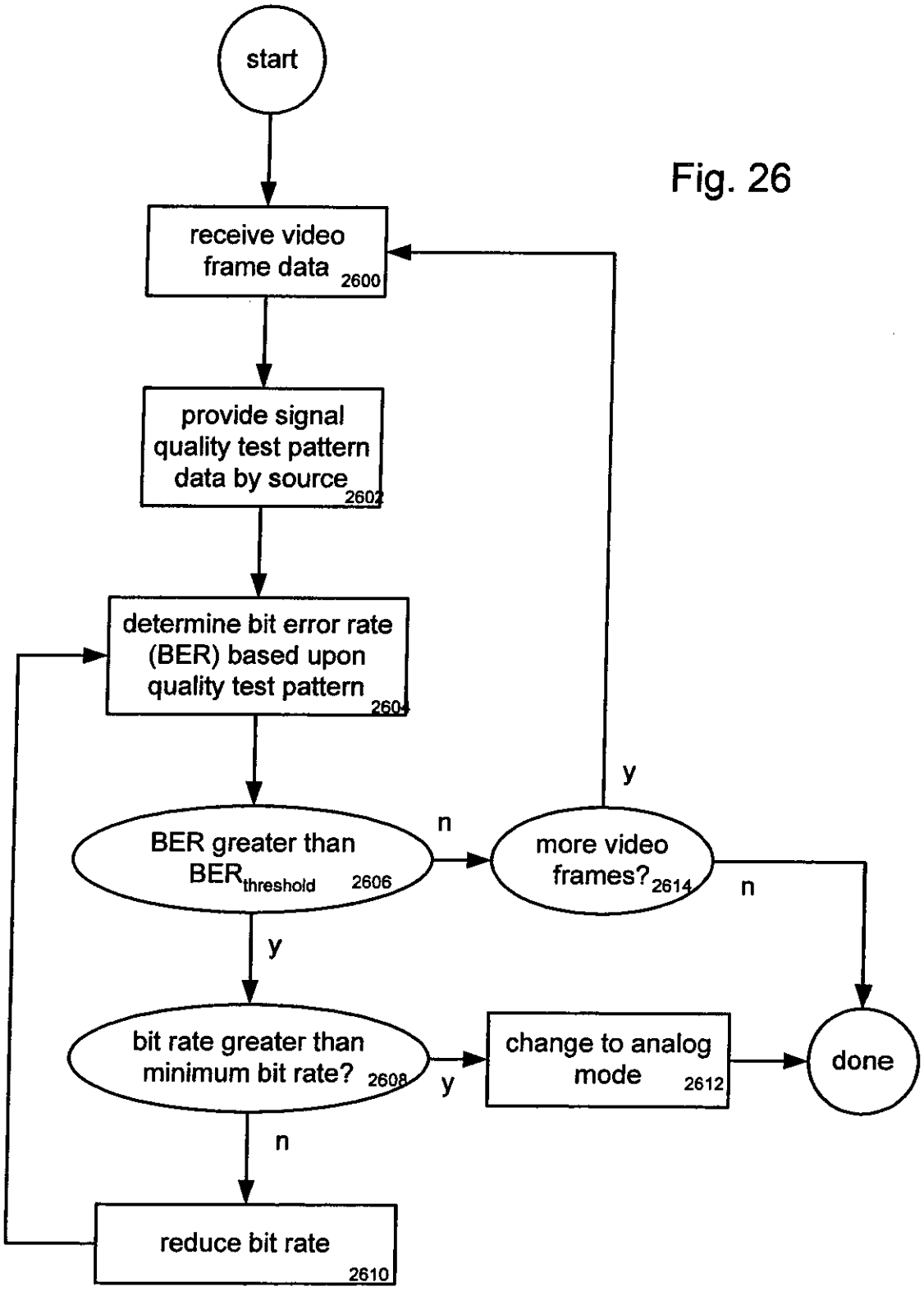
start
receive video frame data 2600
provide signal quality test pattern data by source 2602
determine bit error rate (BER) based upon quality test pattern 2604
BER greater than BER threshold 2606
n
more video frames? 2614
y
n
y
bit rate greater than minimum bit rate? 2608
y
change to analog mode 2612
done
n
reduce bit rate 2610

Fig. 26

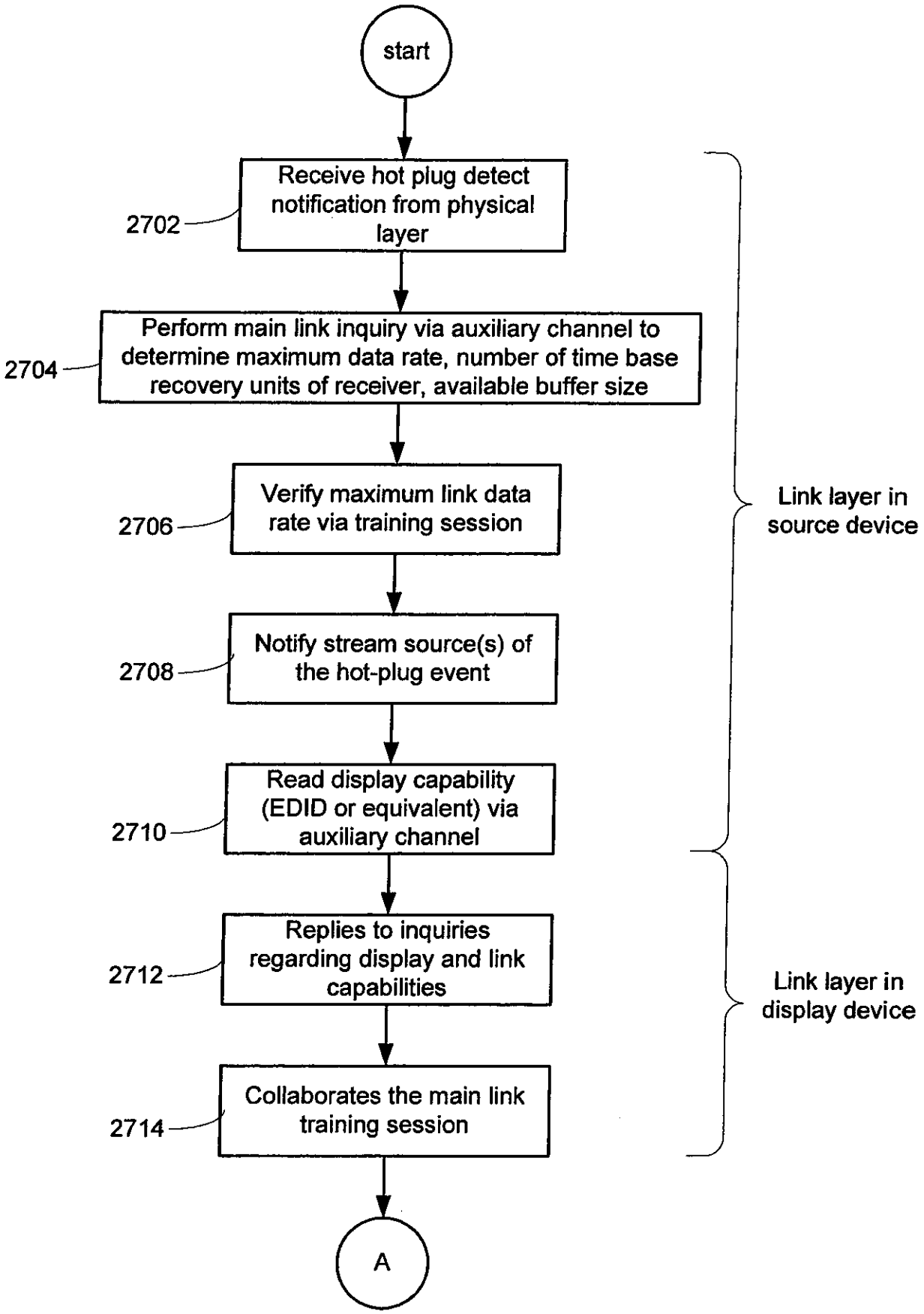
start
Receive hot plug detect notification from physical layer
2702
Perform main link inquiry via auxiliary channel to determine maximum data rate, number of time base recovery units of receiver, available buffer size
2704
Verify maximum link data rate via training session
2706
Notify stream source(s) of the hot-plug event
2708
Read display capability (EDID or equivalent) via auxiliary channel
2710
Replies to inquiries regarding display and link capabilities
2712
Collaborates the main link training session
2714
A
Link layer in source device
Link layer in display device

Fig. 27A

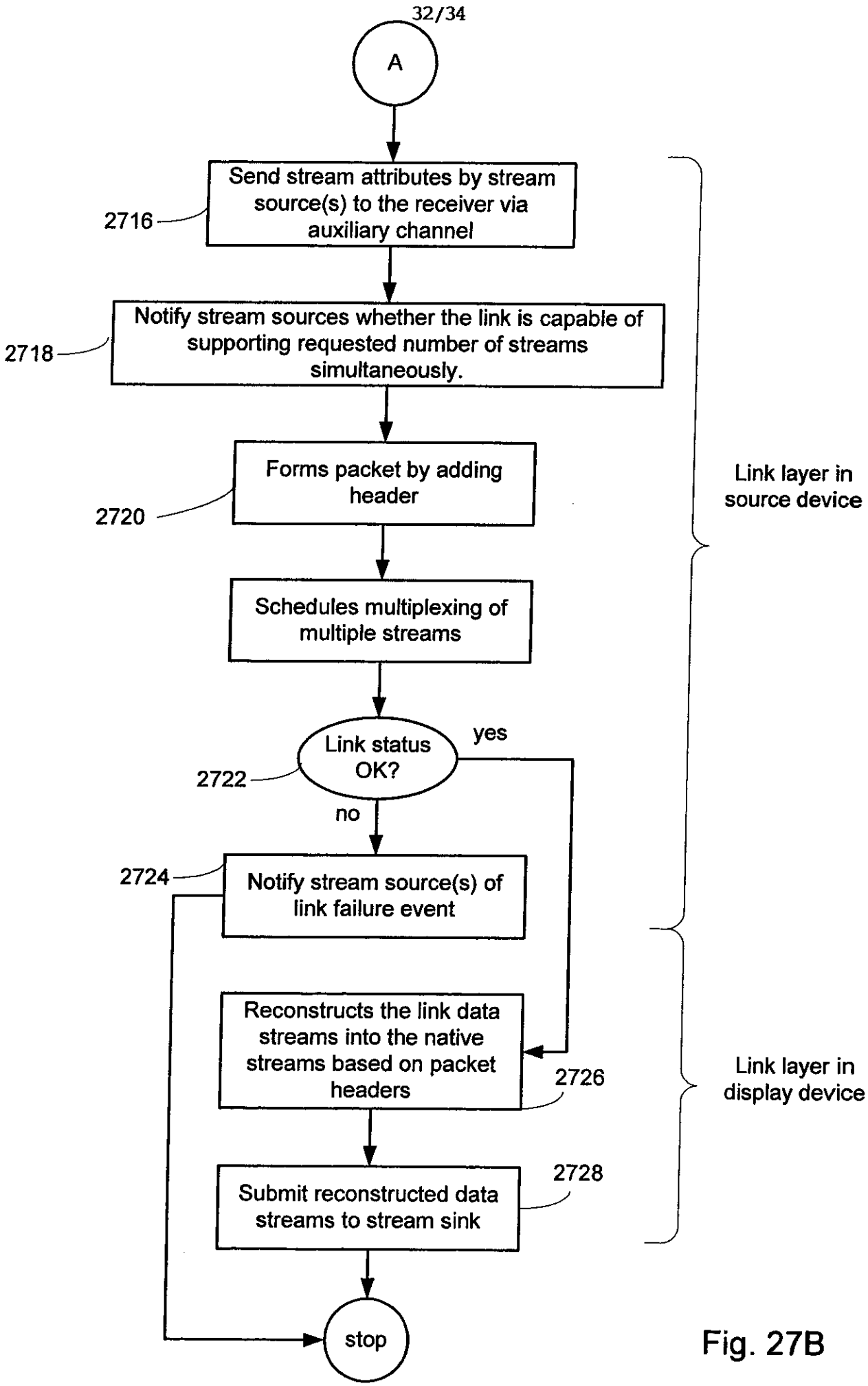
A
Send stream attributes by stream source(s) to the receiver via auxiliary channel
2716
Notify stream sources whether the link is capable of supporting requested number of streams simultaneously.
2718
Forms packet by adding header
2720
Schedules multiplexing of multiple streams
Link status OK?
2722
yes
no
Notify stream source(s) of link failure event
2724
Reconstructs the link data streams into the native streams based on packet headers
2726
Submit reconstructed data streams to stream sink
2728
stop
Link layer in source device
Link layer in display device

Fig. 27B

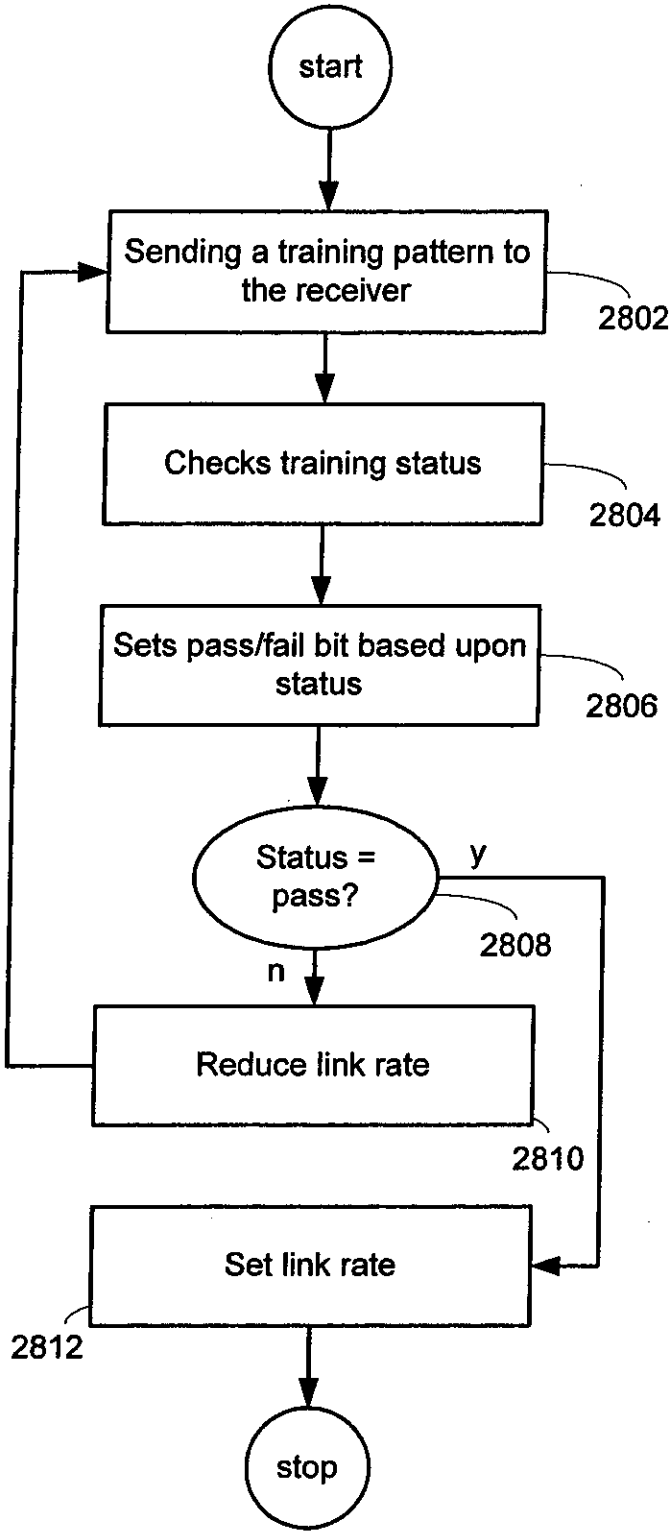
start
Sending a training pattern to the receiver
2802
Checks training status
2804
Sets pass/fail bit based upon status
2806
Status = pass?
y
2808
n
Reduce link rate
2810
Set link rate
2812
stop

Fig. 28

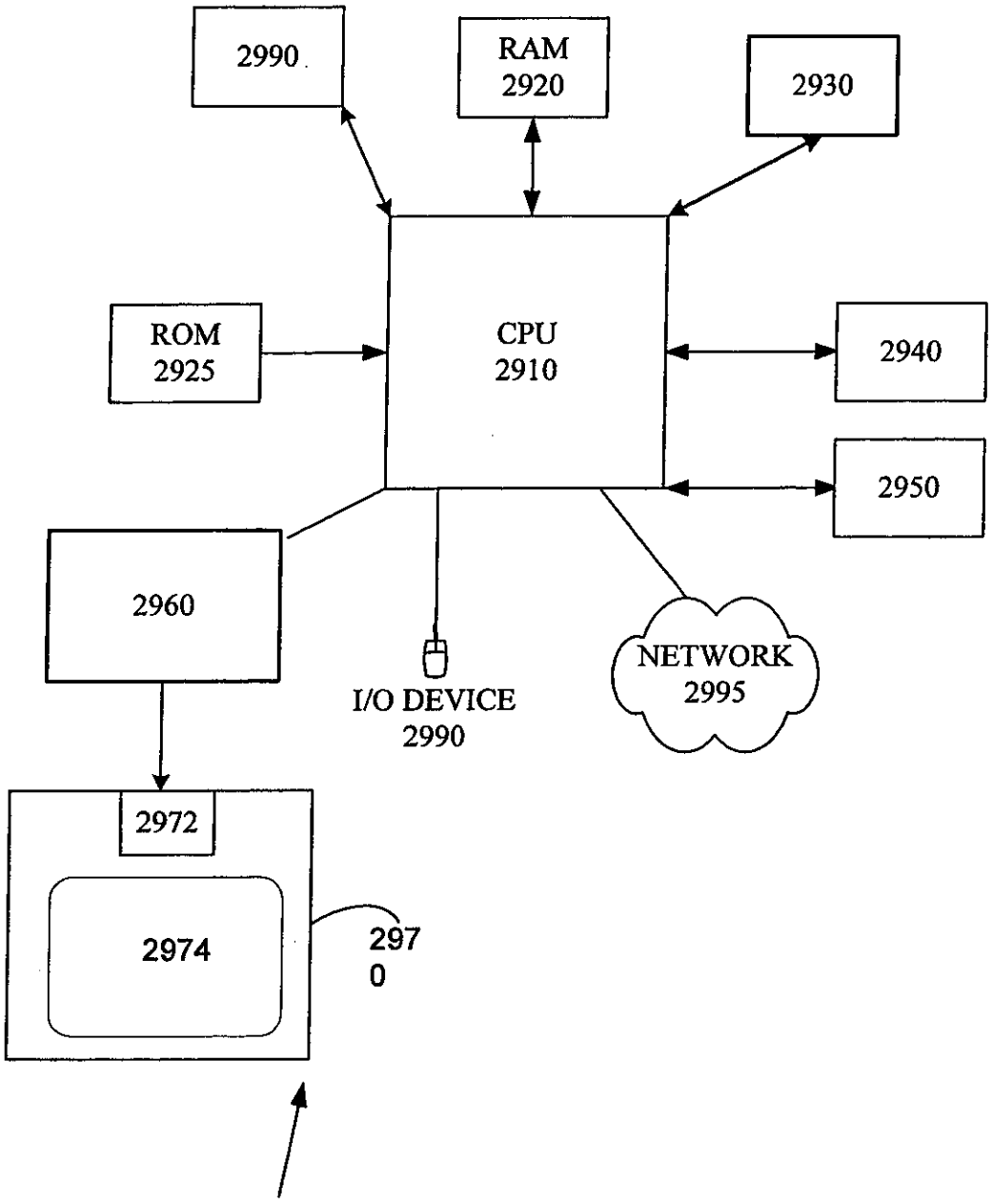
2990
RAM
2920
2930
ROM
2925
CPU
2910
2940
2950
2960
I/O DEVICE
2990
NETWORK
2995
2972
2974
297
0
2900

Fig. 29