FIG. 1

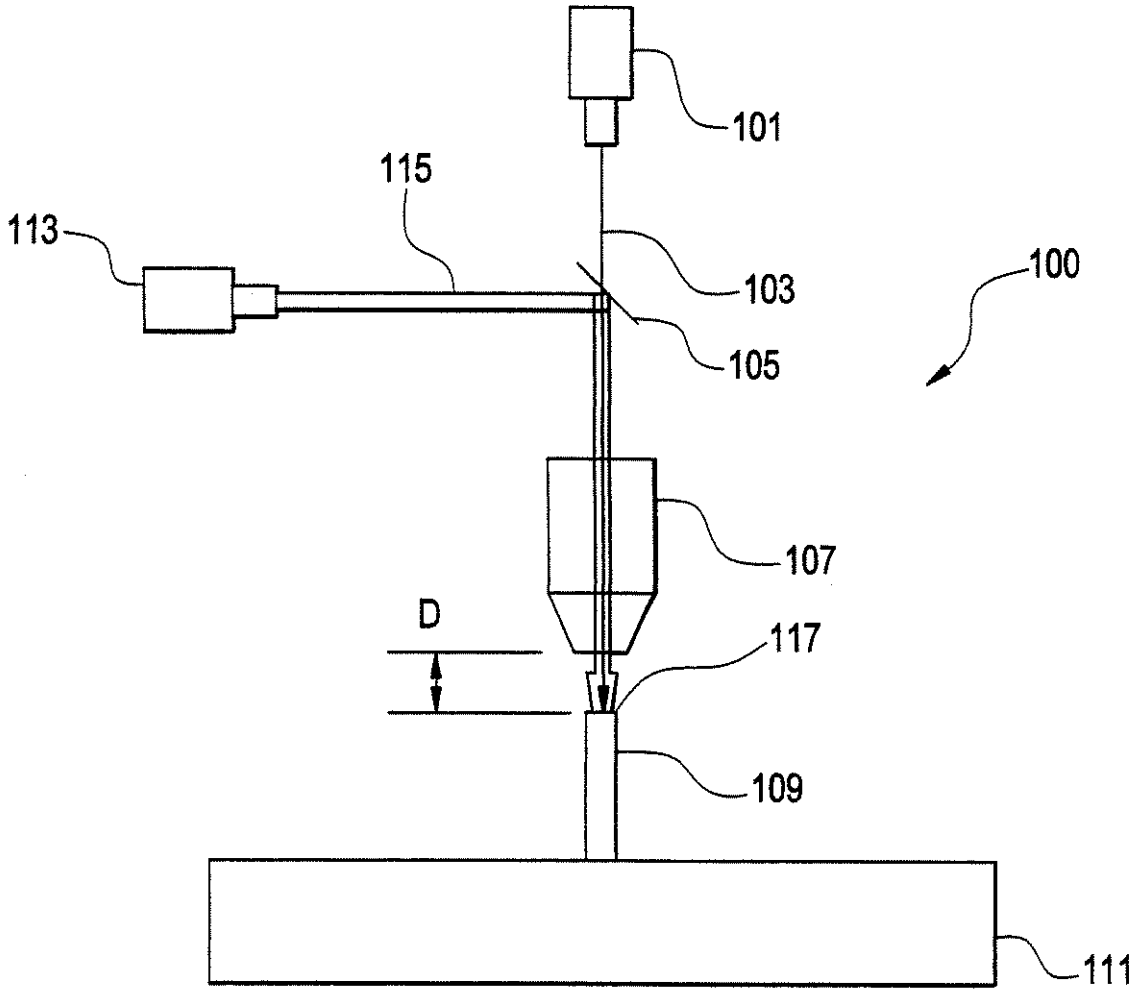

FIG. 2

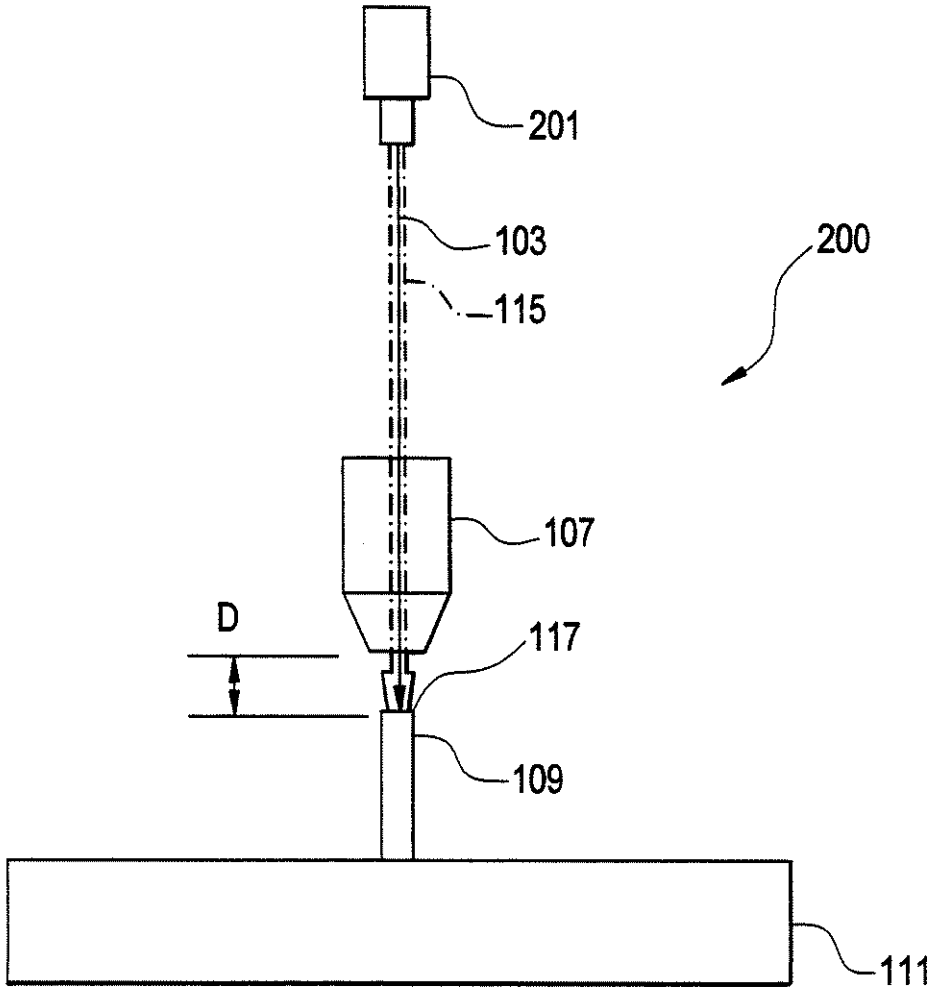

FIG. 3

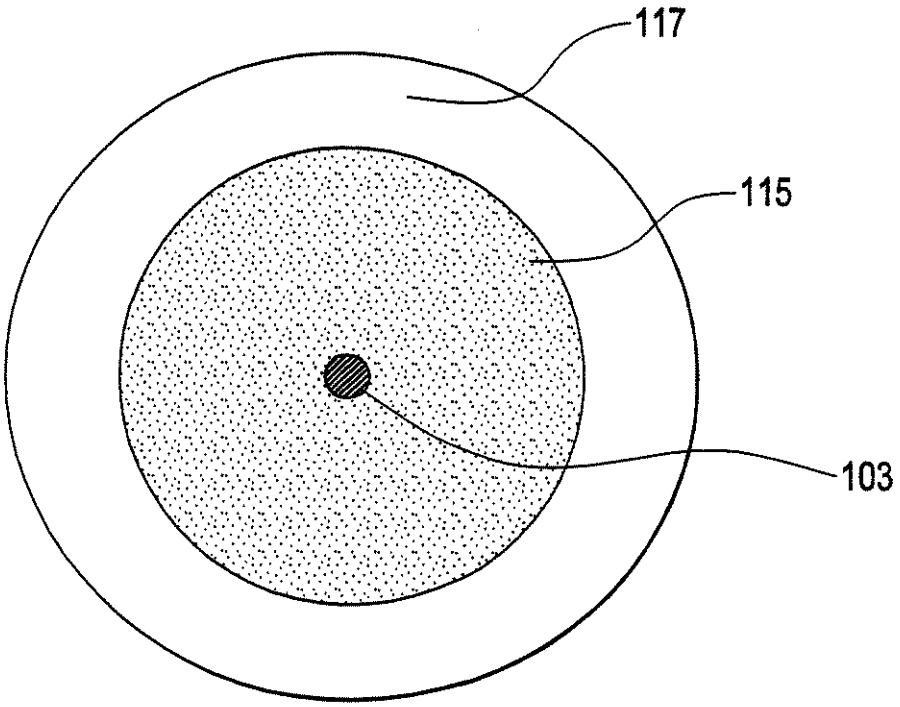

FIG. 4

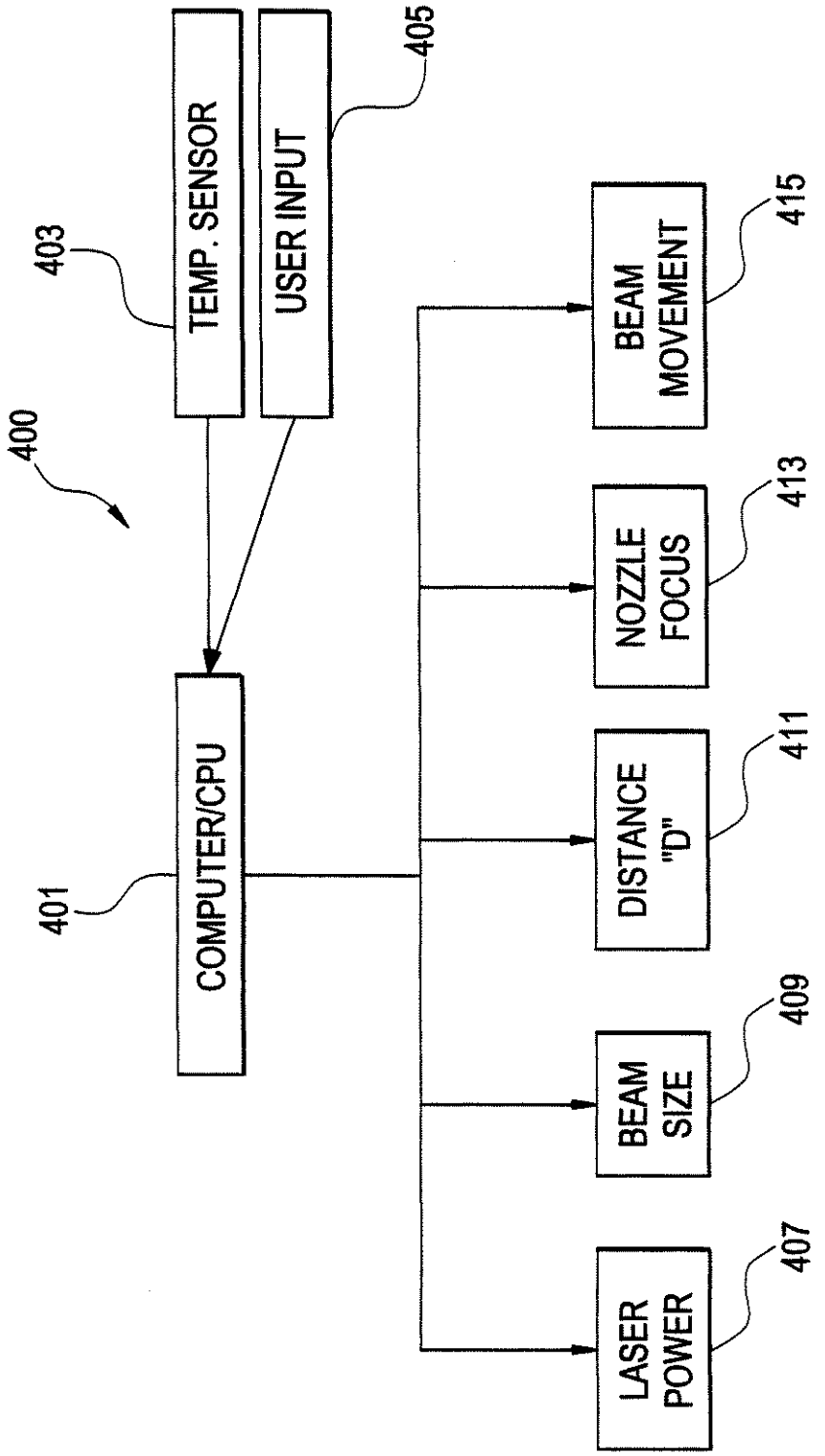
400
401
COMPUTER/CPU
403
TEMP. SENSOR
405
USER INPUT
407
LASER POWER
409
BEAM SIZE
411
DISTANCE "D"
413
NOZZLE FOCUS
415
BEAM MOVEMENT