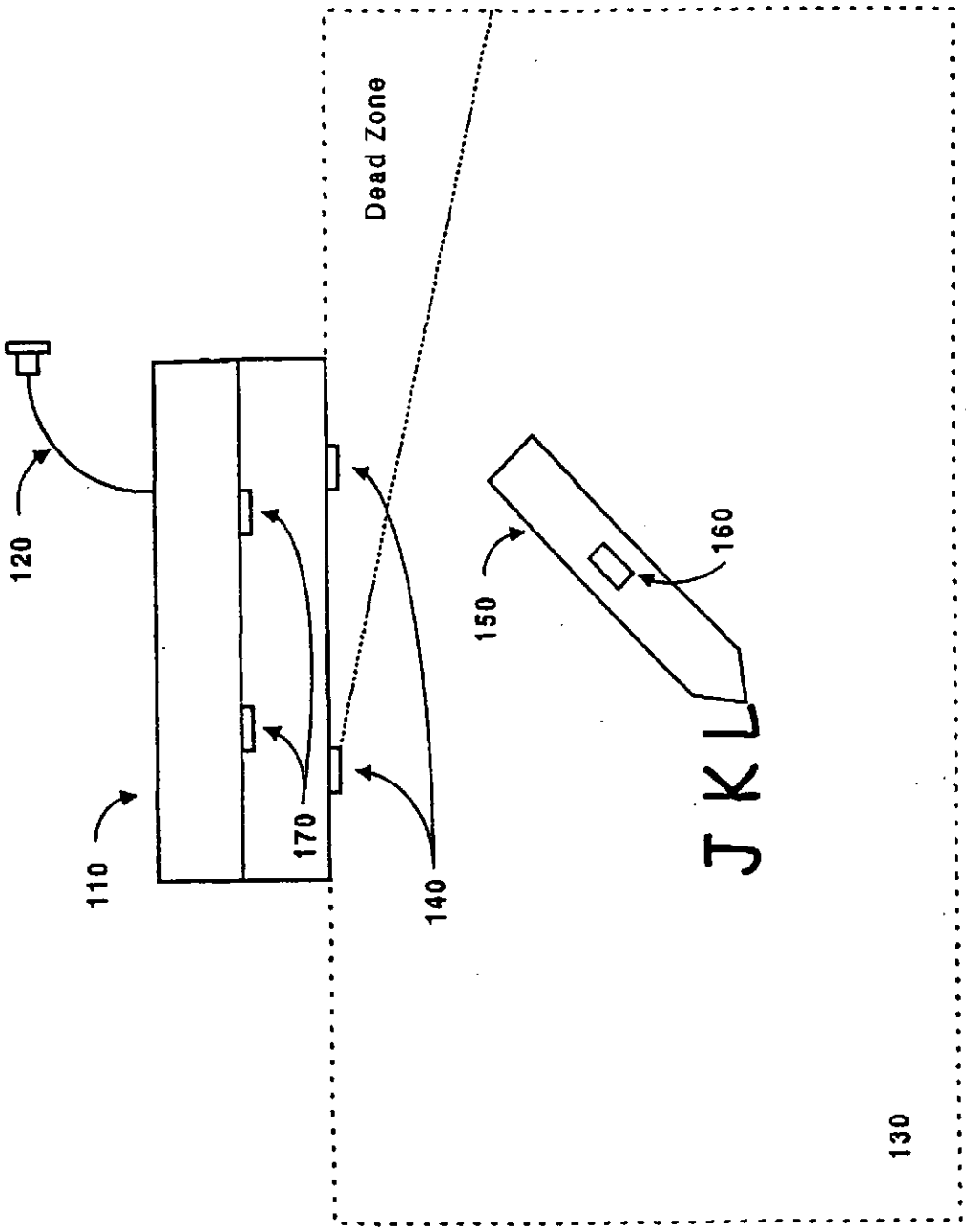

100
(Prior Art)
FIG. 1

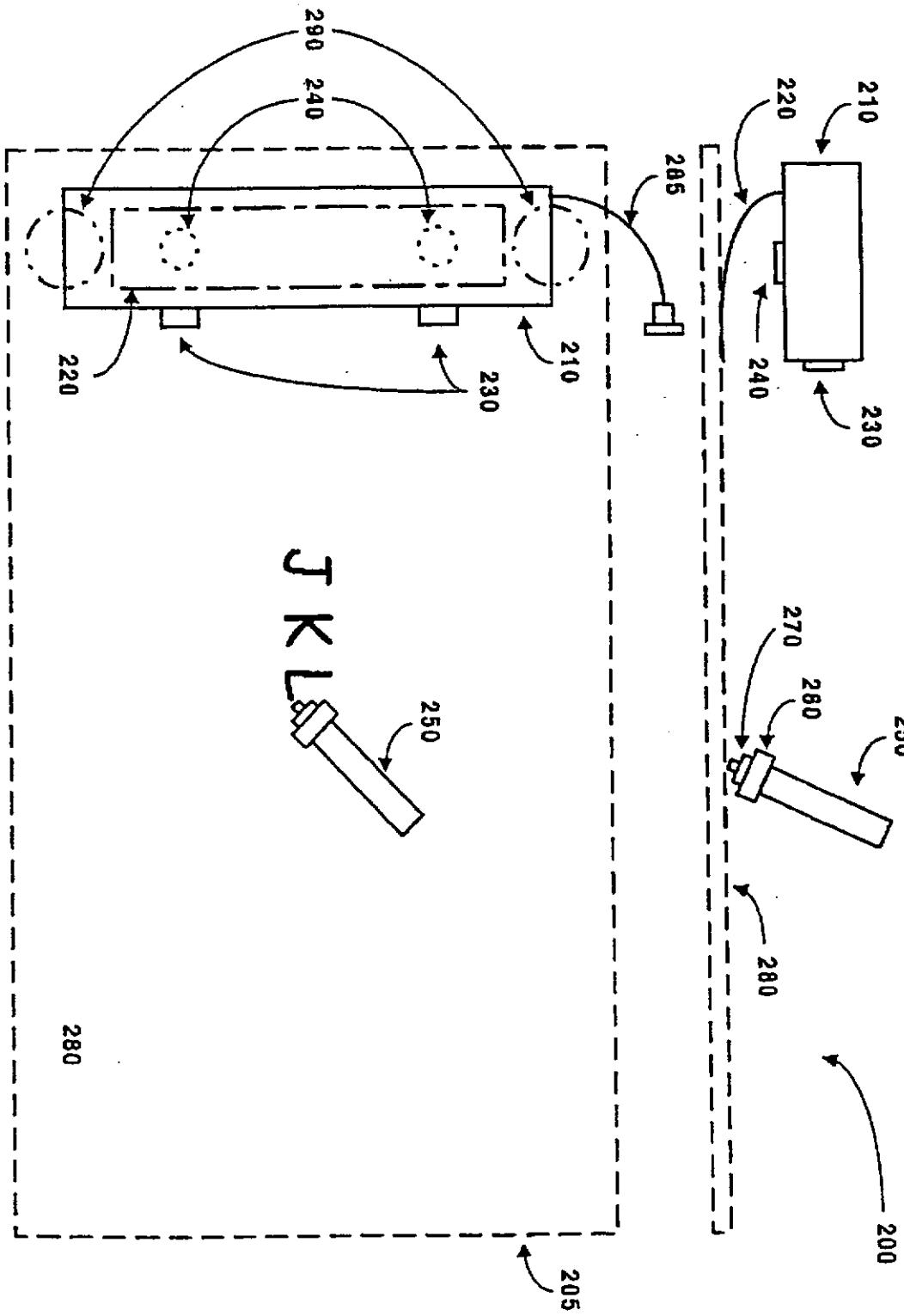

(Prior Art)

FIG. 2

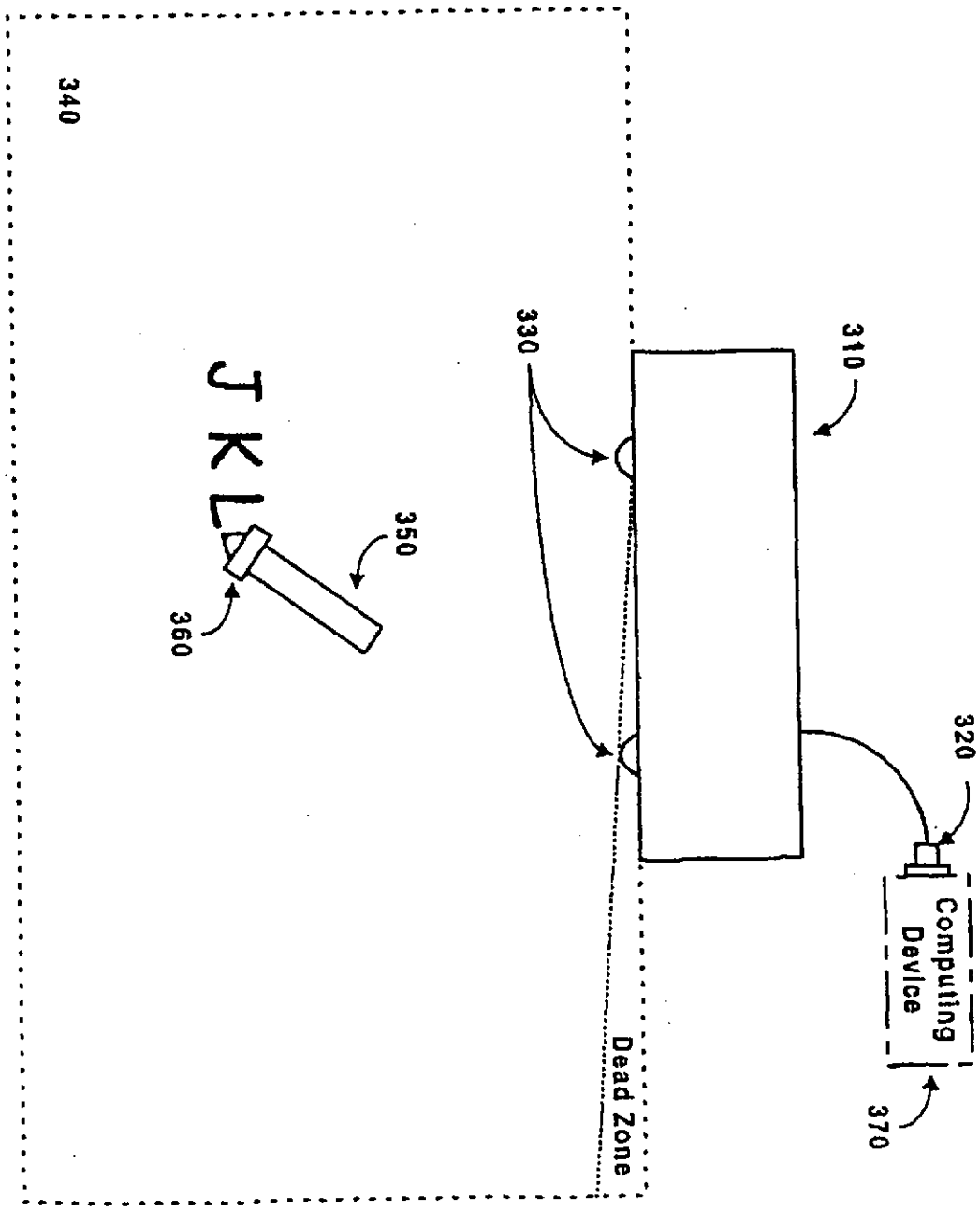

300
FIG. 3

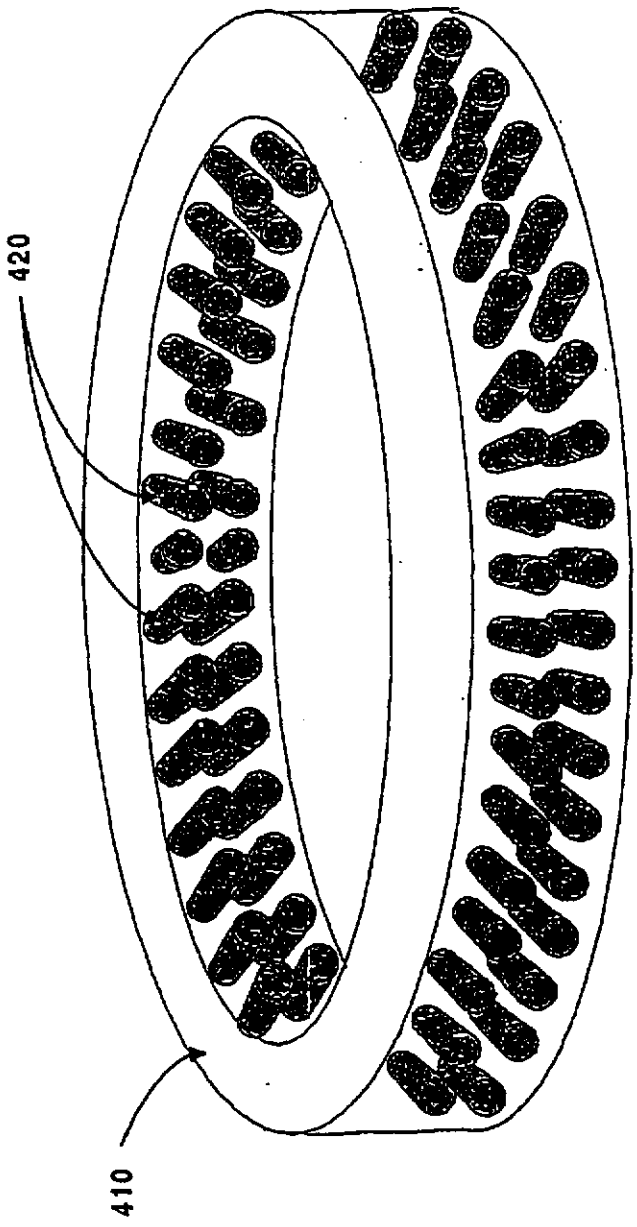

400
FIG. 4