(12) INTERNATIONAL APPLICATION PUBLISHED UNDER THE PATENT COOPERATION TREATY (PCT)

(19) World Intellectual Property Organization
International Bureau

(43) International Publication Date
16 July 2009 (16.07.2009)

PCT

(10) International Publication Number
WO 2009/088535 A1

(51) International Patent Classification:
H03M 13/41 (2006.01)

(21) International Application Number:
PCT/US2008/070385

(22) International Filing Date: 17 July 2008 (17.07.2008)

(25) Filing Language: English

(26) Publication Language: English

(30) Priority Data:
11/970,373 7 January 2008 (07.01.2008) US

(71) Applicant *(for all designated States except US)*: **QUALCOMM INCORPORATED** [US/US]; ATTN: International IP Administration, 5775 Morehouse Drive, San Diego, California 92121-1714 (US).

(72) Inventors; and
(75) Inventors/Applicants *(for US only)*: **LEE, Chun Woo** [KR/US]; 5775 Morehouse Drive, San Diego, California 92121-1714 (US). **PARK, Jong Hyeon** [KR/US]; 5775 Morehouse Drive, San Diego, California 92121-1714 (US).

(74) Agent: **FRANKS, Ross L.**; Attn : International Ip Administration, 5775 Morehouse Drive, San Diego, California 92121-1714 (US).

(81) Designated States *(unless otherwise indicated, for every kind of national protection available)*: AE, AG, AL, AM, AO, AT, AU, AZ, BA, BB, BG, BH, BR, BW, BY, BZ, CA, CH, CN, CO, CR, CU, CZ, DE, DK, DM, DO, DZ, EC, EE, EG, ES, FI, GB, GD, GE, GH, GM, GT, HN, HR, HU, ID, IL, IN, IS, JP, KE, KG, KM, KN, KP, KR, KZ, LA, LC, LK, LR, LS, LT, LU, LY, MA, MD, ME, MG, MK, MN, MW, MX, MY, MZ, NA, NG, NI, NO, NZ, OM, PG, PH, PL, PT, RO, RS, RU, SC, SD, SE, SG, SK, SL, SM, ST, SV, SY, TJ, TM, TN, TR, TT, TZ, UA, UG, US, UZ, VC, VN, ZA, ZM, ZW.

(84) Designated States *(unless otherwise indicated, for every kind of regional protection available)*: ARIPO (BW, GH, GM, KE, LS, MW, MZ, NA, SD, SL, SZ, TZ, UG, ZM, ZW), Eurasian (AM, AZ, BY, KG, KZ, MD, RU, TJ, TM), European (AT, BE, BG, CH, CY, CZ, DE, DK, EE, ES, FI, FR, GB, GR, HR, HU, IE, IS, IT, LT, LU, LV, MC, MT, NL, NO, PL, PT, RO, SE, SI, SK, TR), OAPI (BF, BJ, CF, CG, CI, CM, GA, GN, GQ, GW, ML, MR, NE, SN, TD, TG).

Declarations under Rule 4.17:
— *as to applicant's entitlement to apply for and be granted a patent (Rule 4.17(ii))*
— *as to the applicant's entitlement to claim the priority of the earlier application (Rule 4.17(iii))*

Published:
— *with international search report*

(54) **Title:** CHANNEL DECODING WITH A-PRIORI INFORMATION ON CHANNEL-MAP MESSAGES

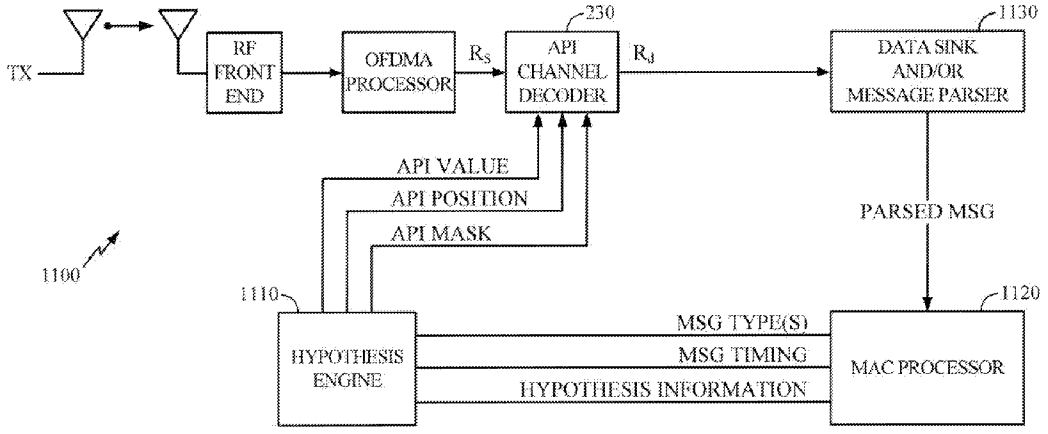

FIG. 11

(57) **Abstract:** Viterbi decoding for wireless communication e.g. according to IEEE 802.16e, with generation of sets of a-priori bit values corresponding to expected combinations of bit values in the encoded data bits. Decoding paths that correspond to decoded data bits that are inconsistent with the a-priori bit values may be removed from the possible decoding paths to consider, and decoding the encoded data bits by selecting a decoding path from remaining decoding paths of the possible decoding paths that were not removed. A-priori bit values may be extracted from various messages, such as downlink-MAP, uplink-MAP, range-request and bandwidth-request messages.

WO 2009/088535 A1