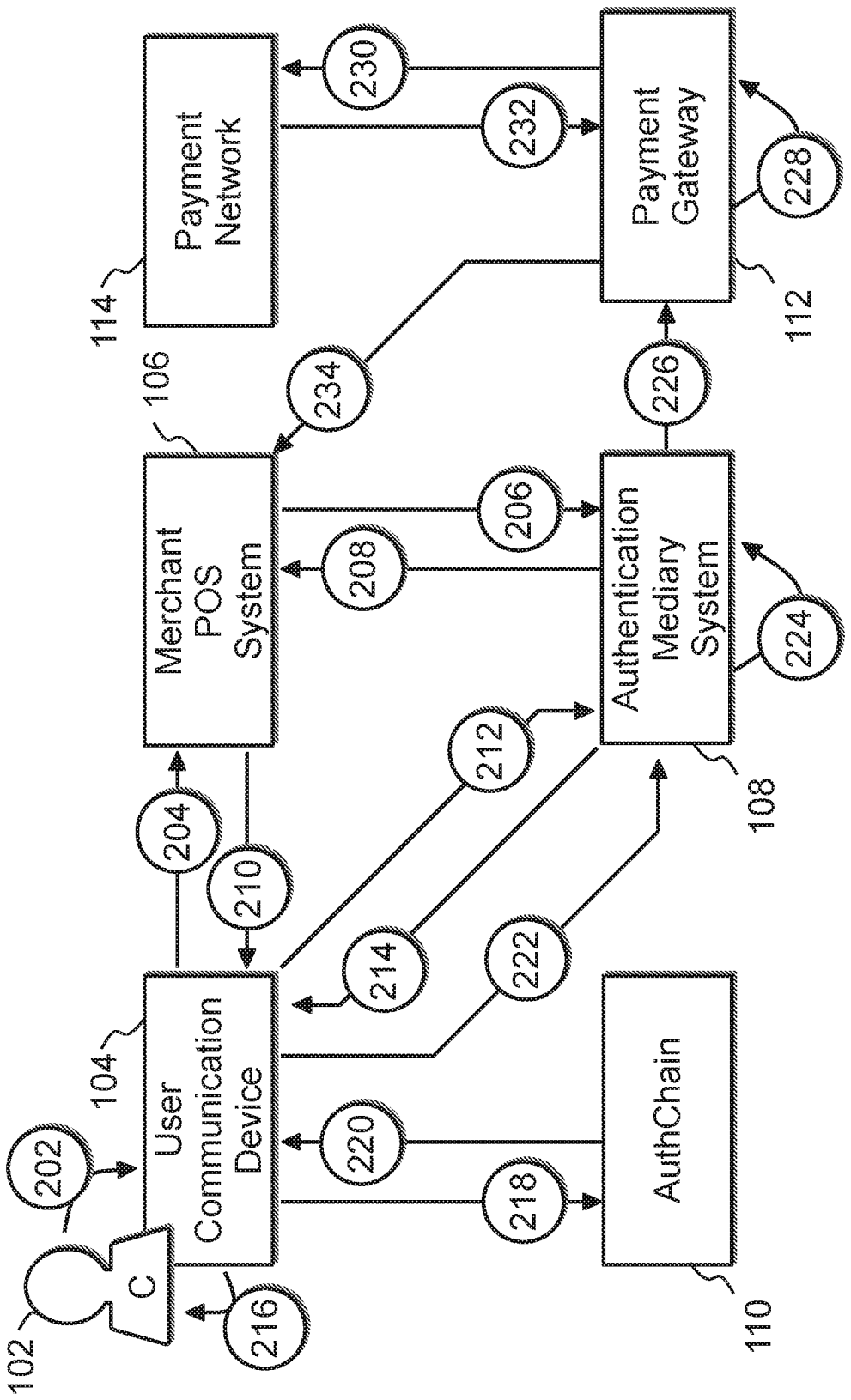
100
102
C
104
User Communication Device
106
Merchant POS System
108
Authentication Mediary System
110
AuthChain
112
Payment Gateway
114
Payment Network
202
204
206
208
210
212
214
216
218
220
222
224
226
228
230
232
234

FIG. 1

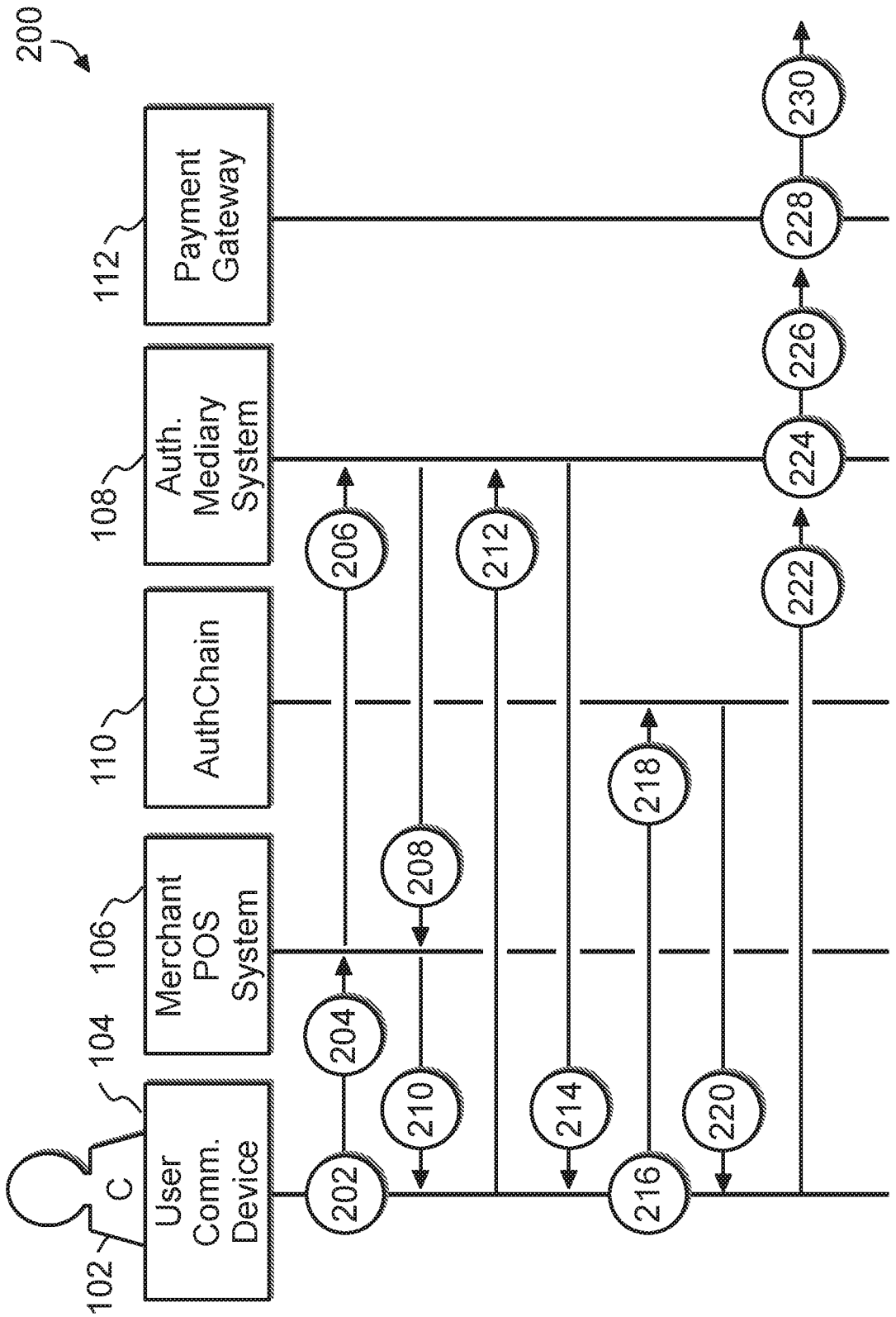
200
User Comm. Device
102
C
104
Merchant POS System
106
AuthChain
110
Auth. Mediary System
108
Payment Gateway
112
202
204
206
208
210
212
214
216
218
220
222
224
226
228
230

FIG. 2

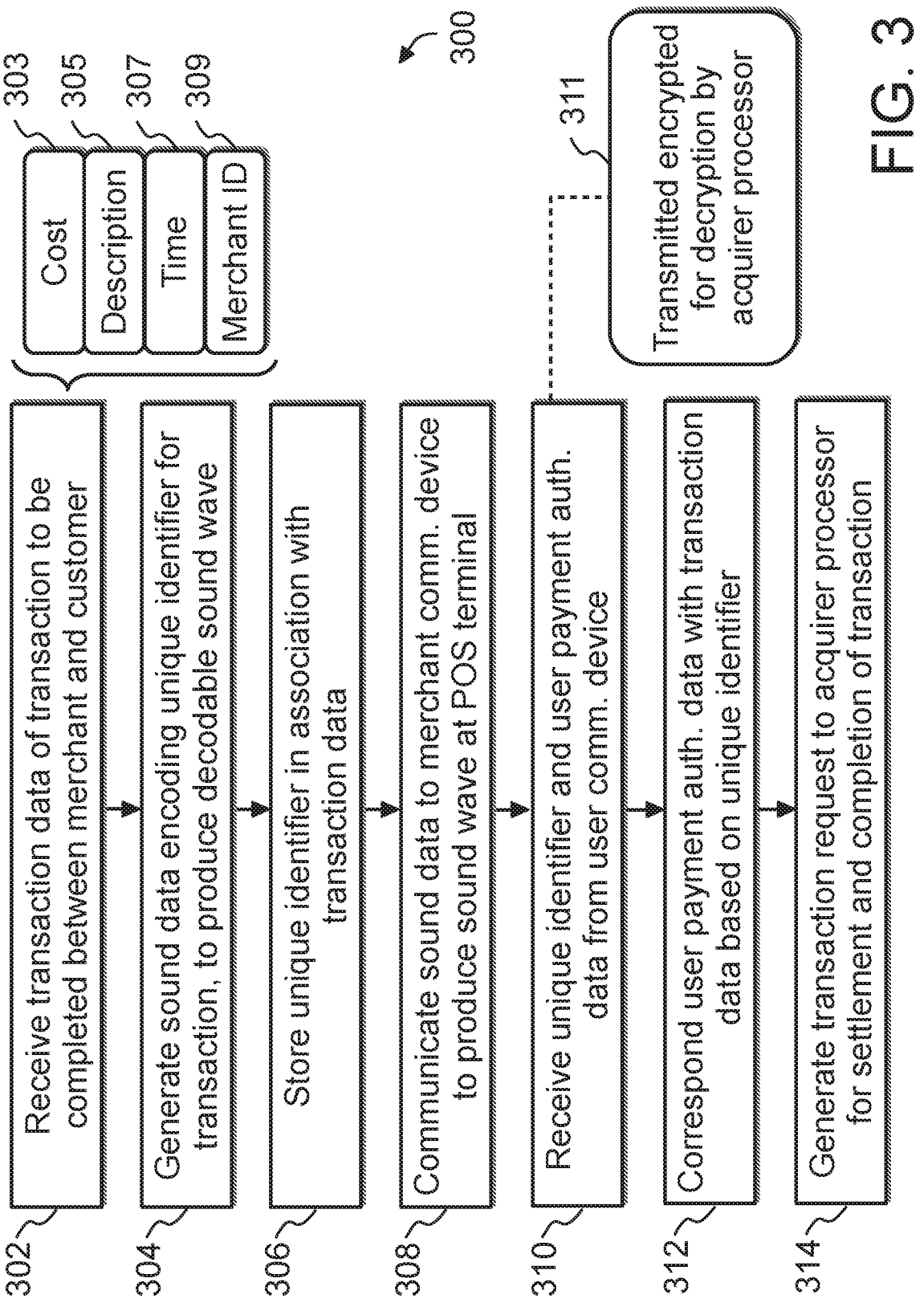
300
302
Receive transaction data of transaction to be completed between merchant and customer
303
Cost
305
Description
307
Time
309
Merchant ID
304
Generate sound data encoding unique identifier for transaction, to produce decodable sound wave
306
Store unique identifier in association with transaction data
308
Communicate sound data to merchant comm. device to produce sound wave at POS terminal
310
Receive unique identifier and user payment auth. data from user comm. device
311
Transmitted encrypted for decryption by acquirer processor
312
Correspond user payment auth. data with transaction data based on unique identifier
314
Generate transaction request to acquirer processor for settlement and completion of transaction

FIG. 3

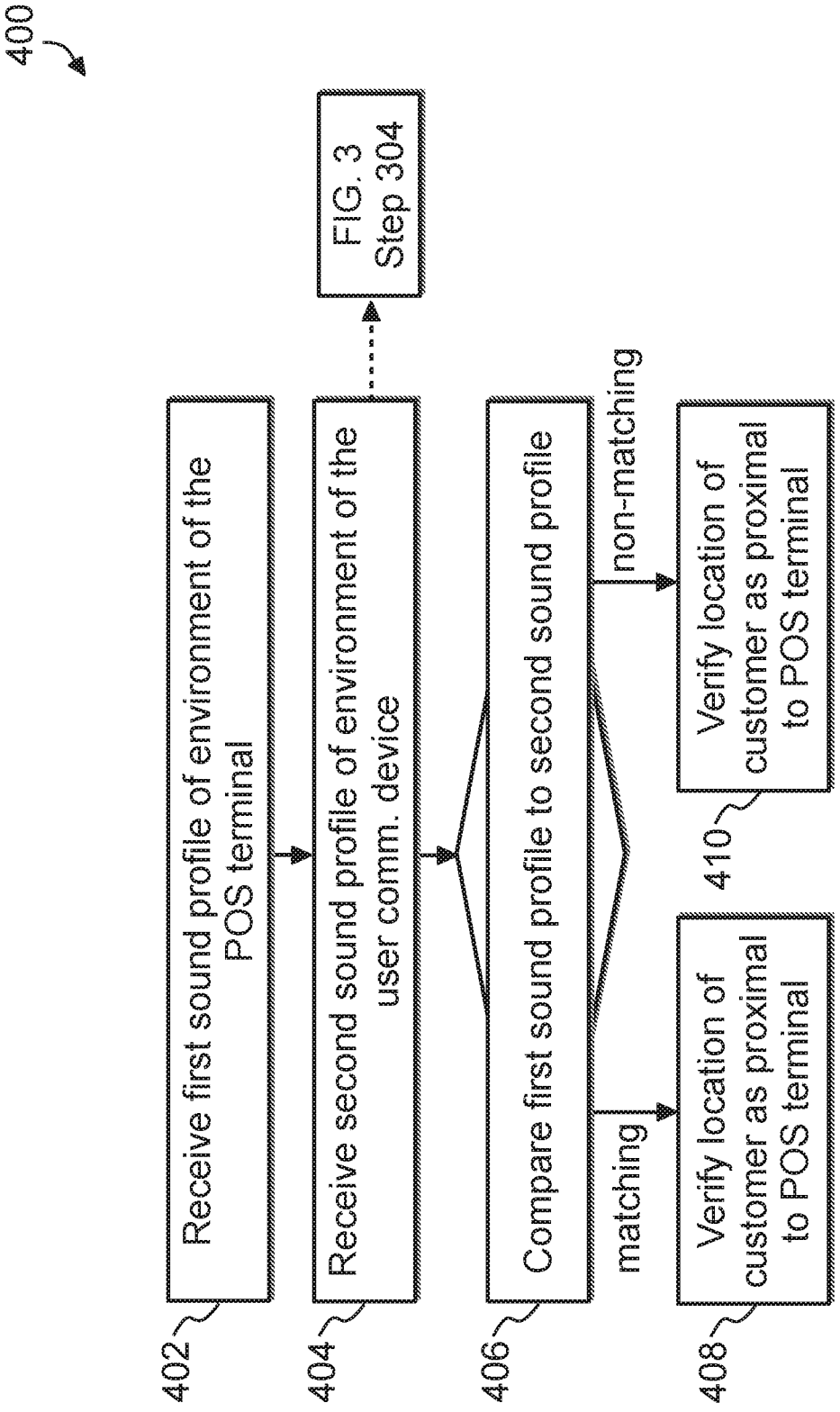
400
Receive first sound profile of environment of the POS terminal
402
Receive second sound profile of environment of the user comm. device
404
FIG. 3 Step 304
Compare first sound profile to second sound profile
406
matching
Verify location of customer as proximal to POS terminal
408
non-matching
Verify location of customer as proximal to POS terminal
410

FIG. 4

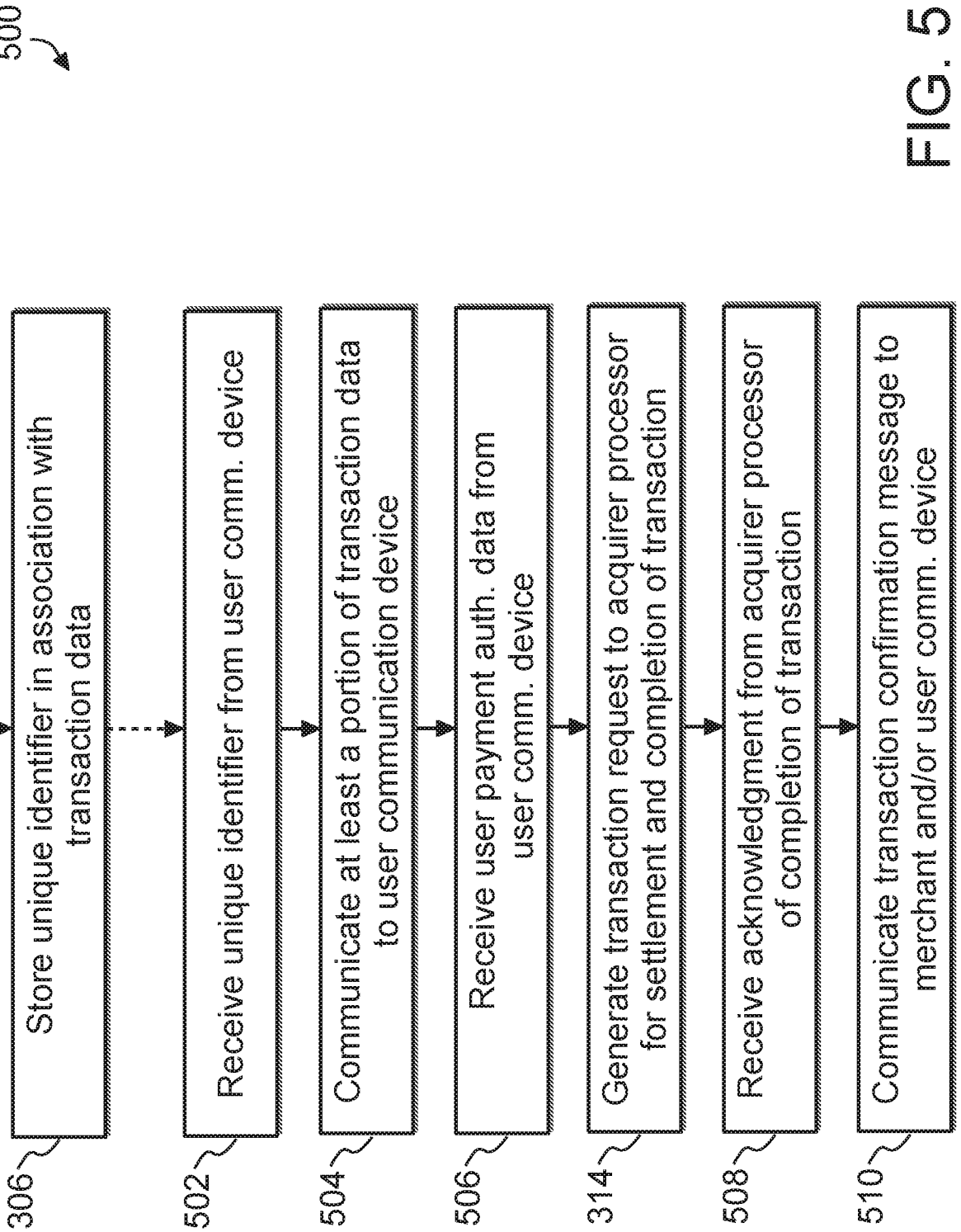
500
306
Store unique identifier in association with transaction data
502
Receive unique identifier from user comm. device
504
Communicate at least a portion of transaction data to user communication device
506
Receive user payment auth. data from user comm. device
314
Generate transaction request to acquirer processor for settlement and completion of transaction
508
Receive acknowledgment from acquirer processor of completion of transaction
510
Communicate transaction confirmation message to merchant and/or user comm. device

FIG. 5

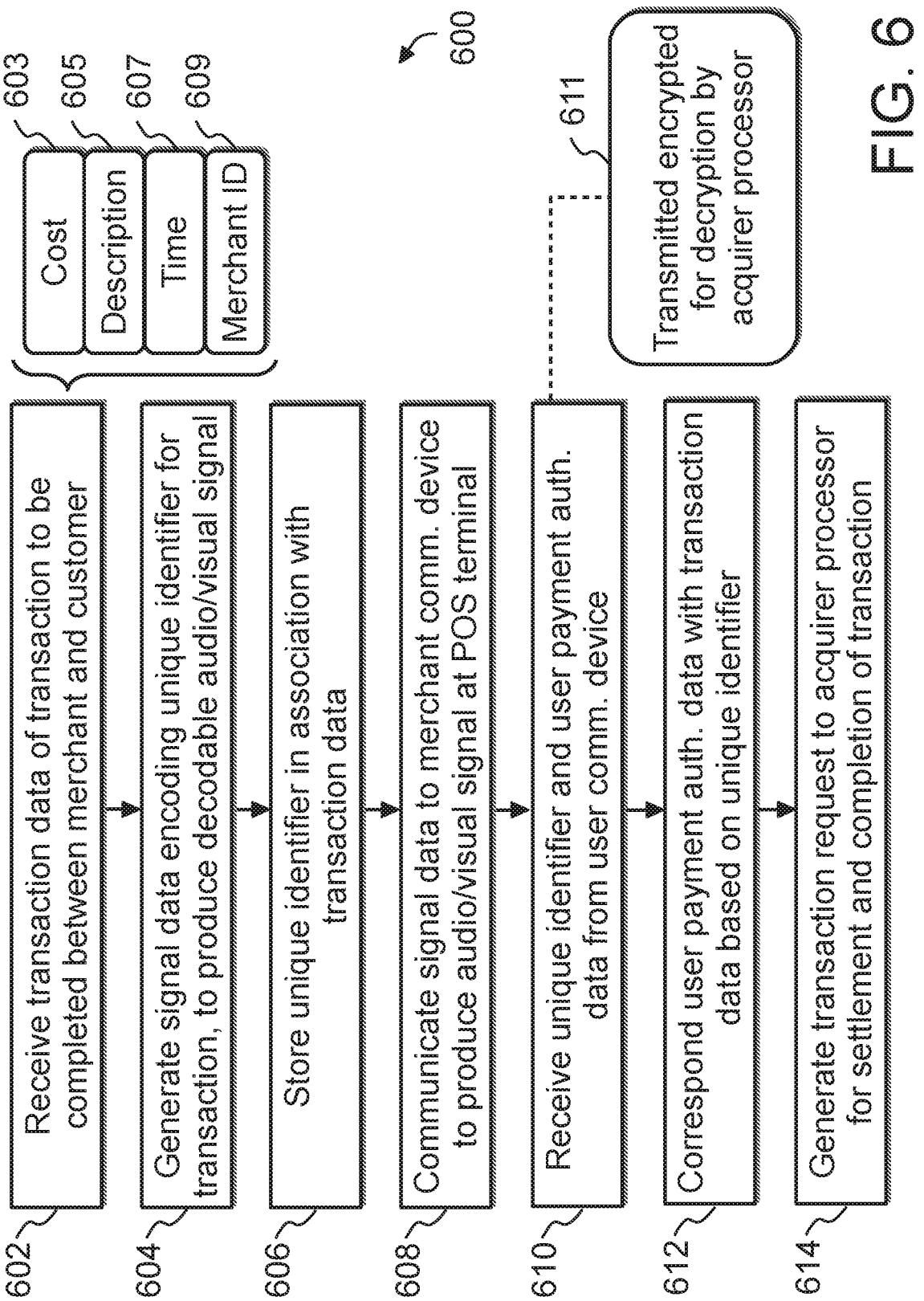
600
602
Receive transaction data of transaction to be completed between merchant and customer
603
Cost
605
Description
607
Time
609
Merchant ID
604
Generate signal data encoding unique identifier for transaction, to produce decodable audio/visual signal
606
Store unique identifier in association with transaction data
608
Communicate signal data to merchant comm. device to produce audio/visual signal at POS terminal
610
Receive unique identifier and user payment auth. data from user comm. device
611
Transmitted encrypted for decryption by acquirer processor
612
Correspond user payment auth. data with transaction data based on unique identifier
614
Generate transaction request to acquirer processor for settlement and completion of transaction

FIG. 6