Fig.1

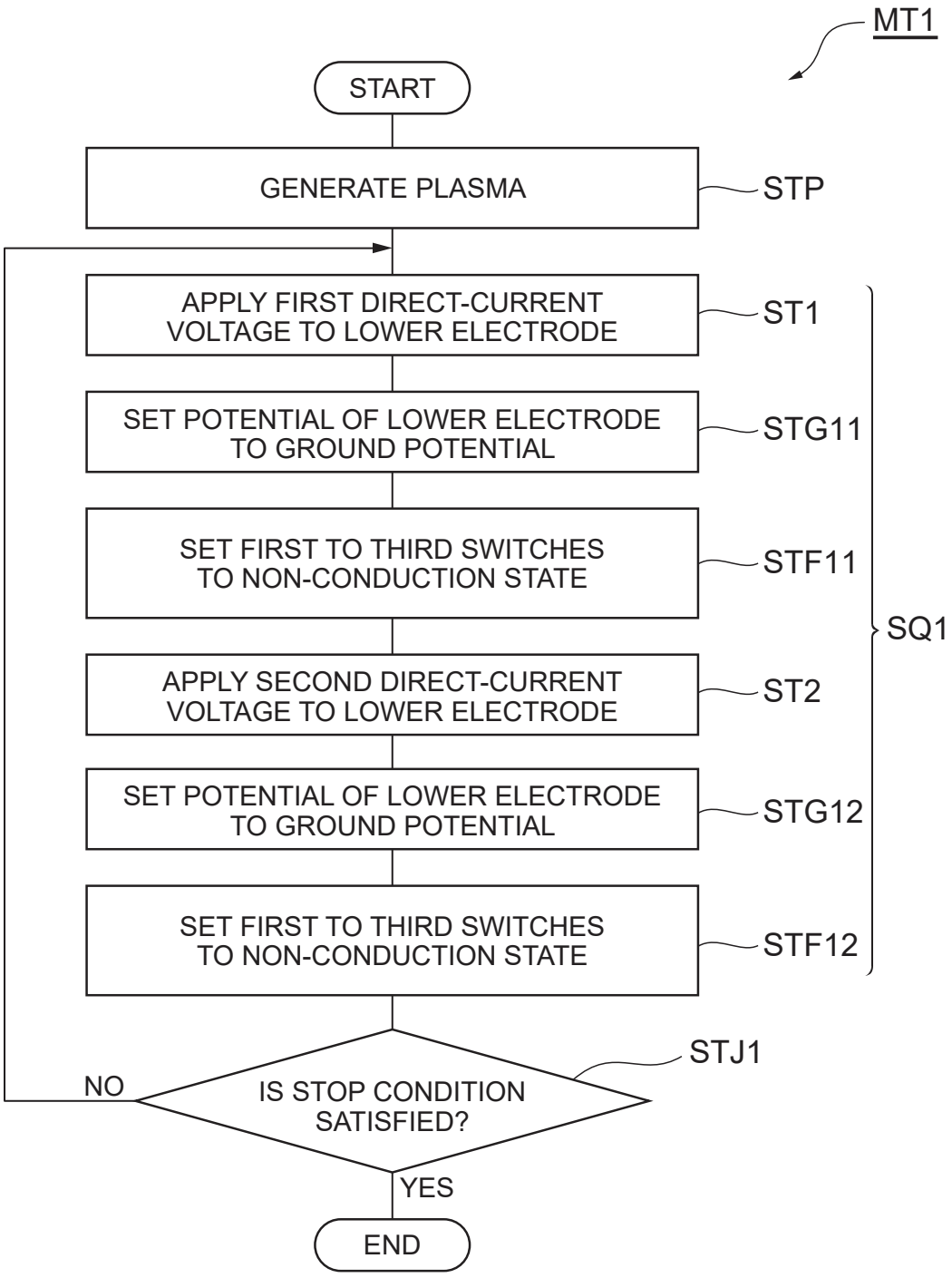
MT1
START
GENERATE PLASMA
STP
APPLY FIRST DIRECT-CURRENT VOLTAGE TO LOWER ELECTRODE
ST1
SET POTENTIAL OF LOWER ELECTRODE TO GROUND POTENTIAL
STG11
SET FIRST TO THIRD SWITCHES TO NON-CONDUCTION STATE
STF11
APPLY SECOND DIRECT-CURRENT VOLTAGE TO LOWER ELECTRODE
ST2
SET POTENTIAL OF LOWER ELECTRODE TO GROUND POTENTIAL
STG12
SET FIRST TO THIRD SWITCHES TO NON-CONDUCTION STATE
STF12
SQ1
IS STOP CONDITION SATISFIED?
STJ1
NO
YES
END

Fig.2

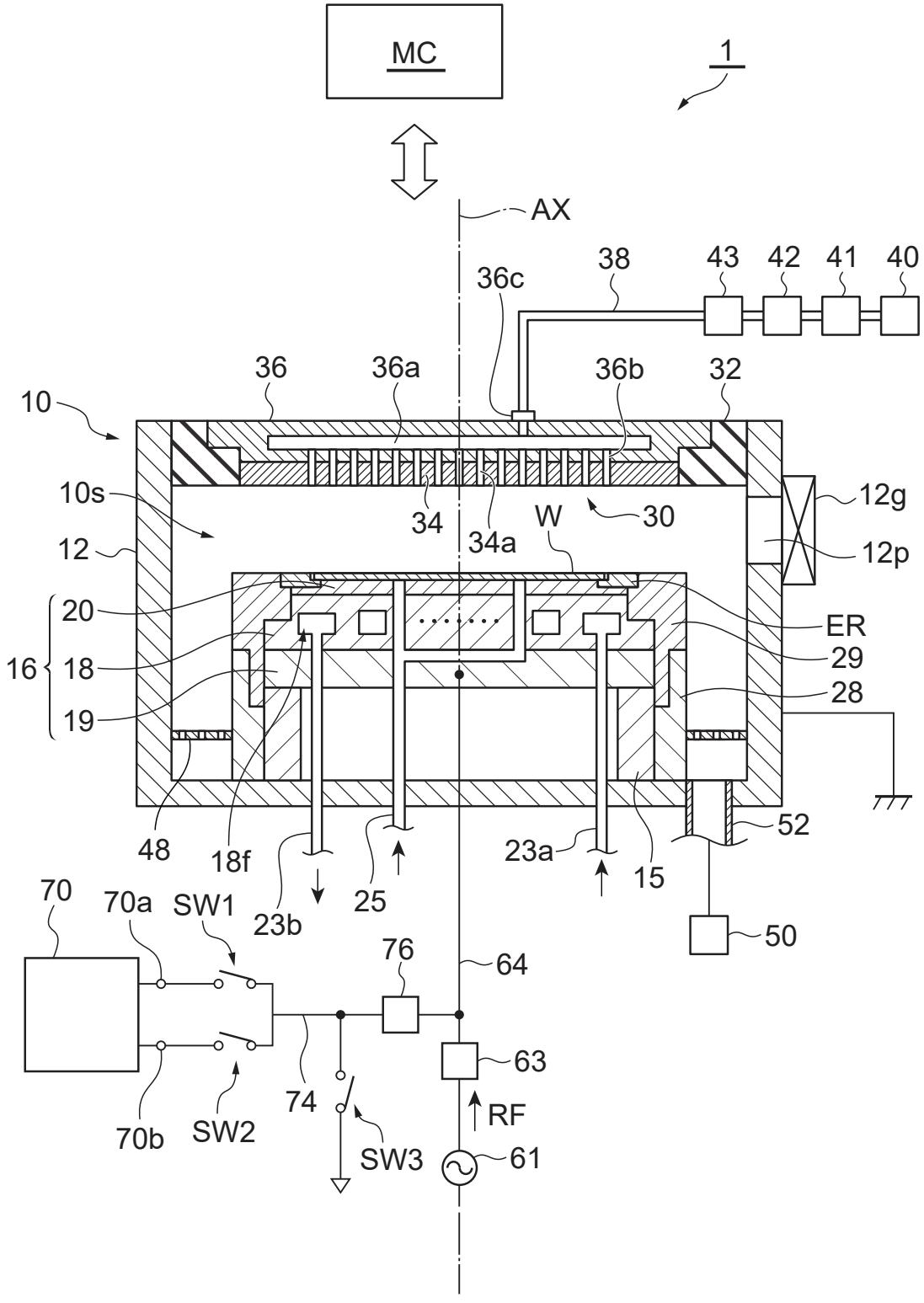
MC
1
AX
38
43
42
41
40
36c
36
36a
36b
32
10
10s
34
34a
W
30
12g
12p
12
20
16
18
19
ER
29
28
48
18f
23b
25
23a
15
52
50
70
70a
SW1
76
64
63
RF
61
74
SW3
70b
SW2

Fig.3A

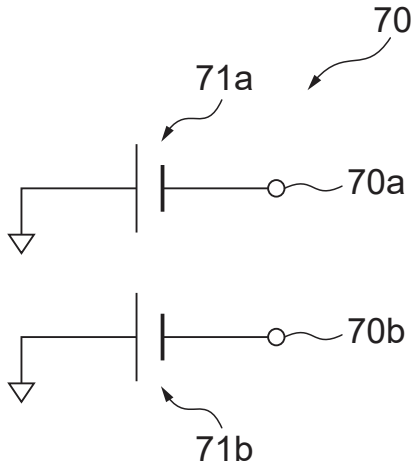

Fig.3B

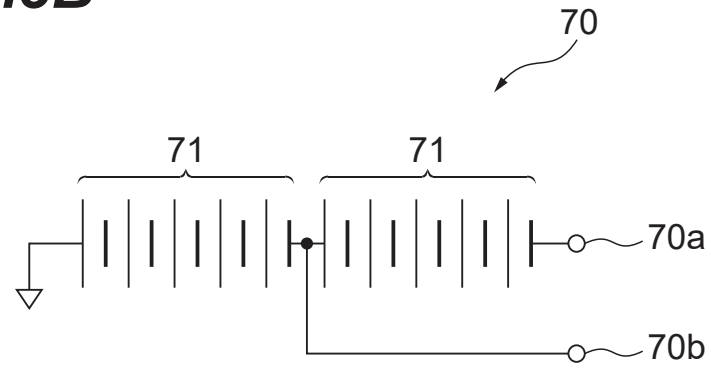

Fig.4

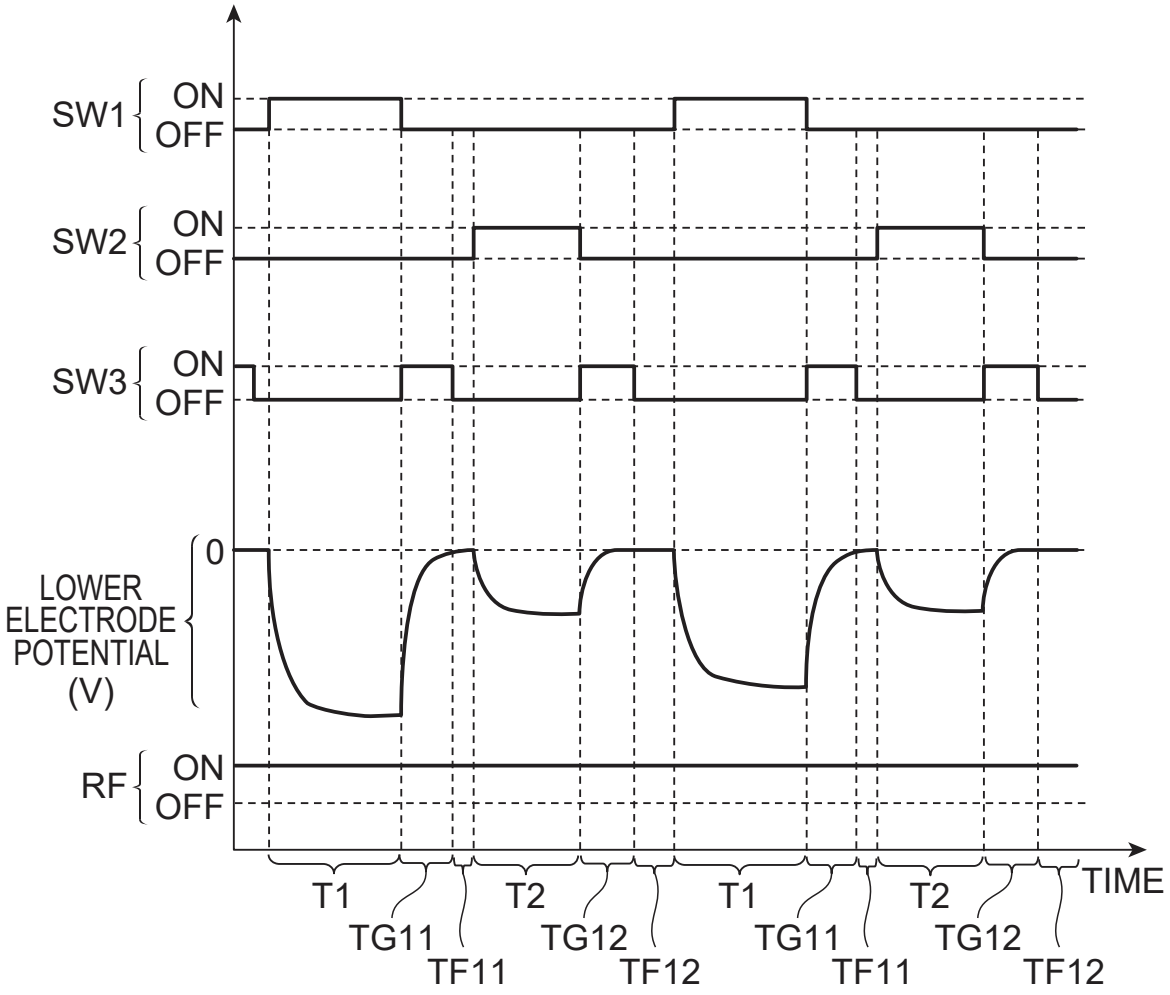
SW1
ON
OFF
SW2
ON
OFF
SW3
ON
OFF
0
LOWER ELECTRODE POTENTIAL (V)
RF
ON
OFF
T1
T2
T1
T2
TIME
TG11
TF11
TG12
TF12
TG11
TF11
TG12
TF12

Fig.5

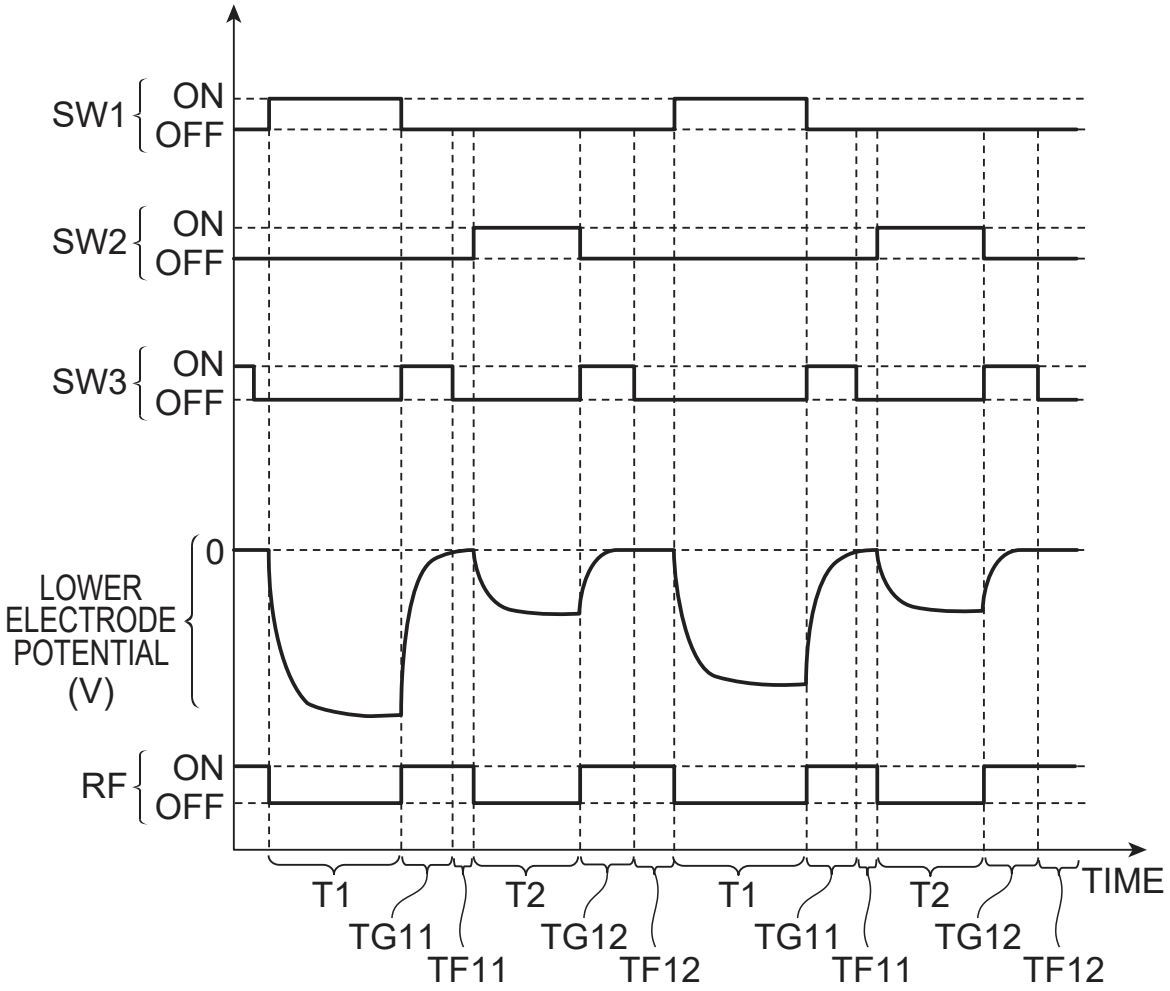
SW1
ON
OFF
SW2
ON
OFF
SW3
ON
OFF
0
LOWER ELECTRODE POTENTIAL (V)
RF
ON
OFF
T1
T2
T1
T2
TIME
TG11
TF11
TG12
TF12
TG11
TF11
TG12
TF12

Fig.6

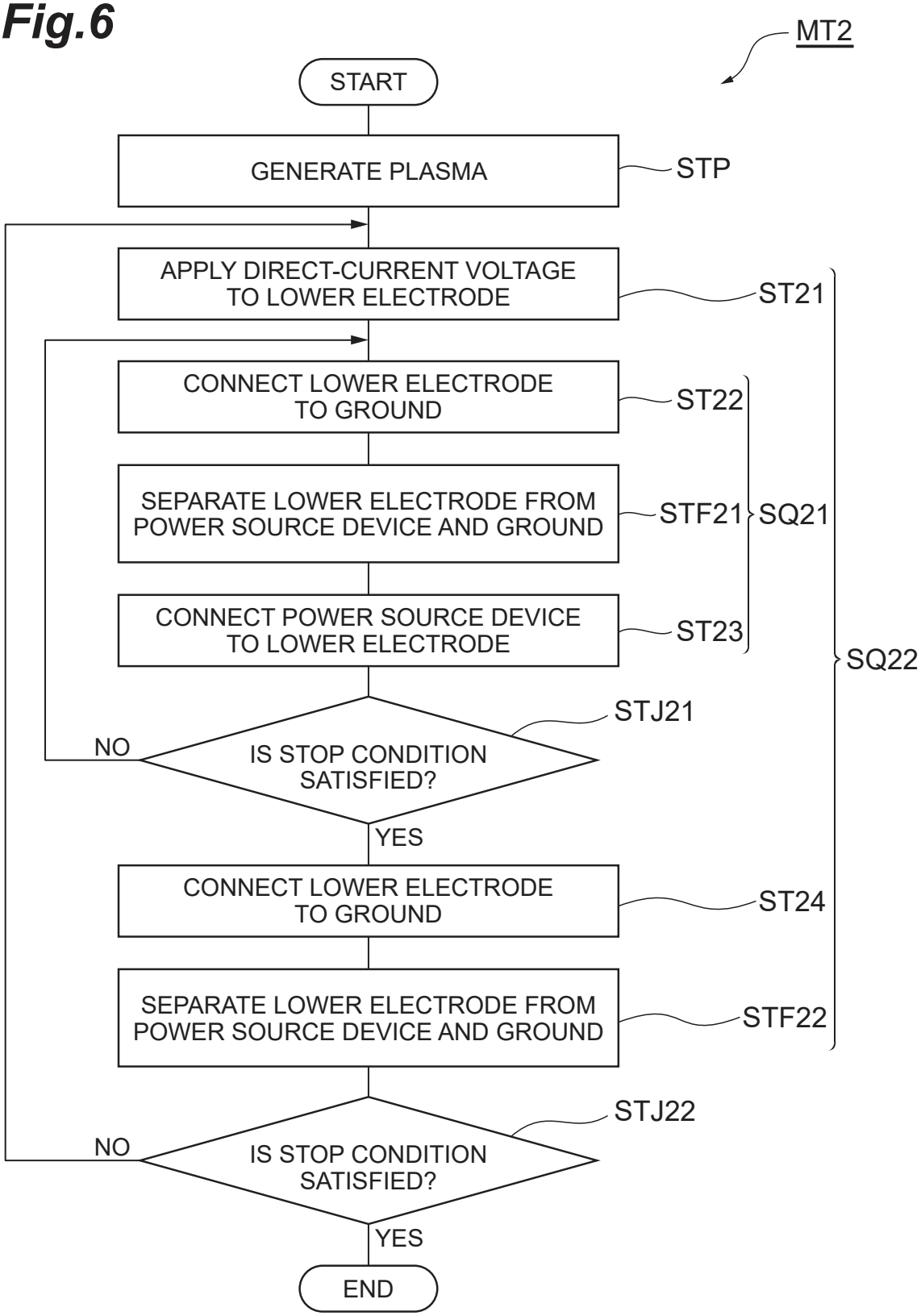
MT2
START
GENERATE PLASMA
STP
APPLY DIRECT-CURRENT VOLTAGE TO LOWER ELECTRODE
ST21
CONNECT LOWER ELECTRODE TO GROUND
ST22
SEPARATE LOWER ELECTRODE FROM POWER SOURCE DEVICE AND GROUND
STF21
SQ21
CONNECT POWER SOURCE DEVICE TO LOWER ELECTRODE
ST23
SQ22
STJ21
IS STOP CONDITION SATISFIED?
NO
YES
CONNECT LOWER ELECTRODE TO GROUND
ST24
SEPARATE LOWER ELECTRODE FROM POWER SOURCE DEVICE AND GROUND
STF22
STJ22
IS STOP CONDITION SATISFIED?
NO
YES
END

Fig.7

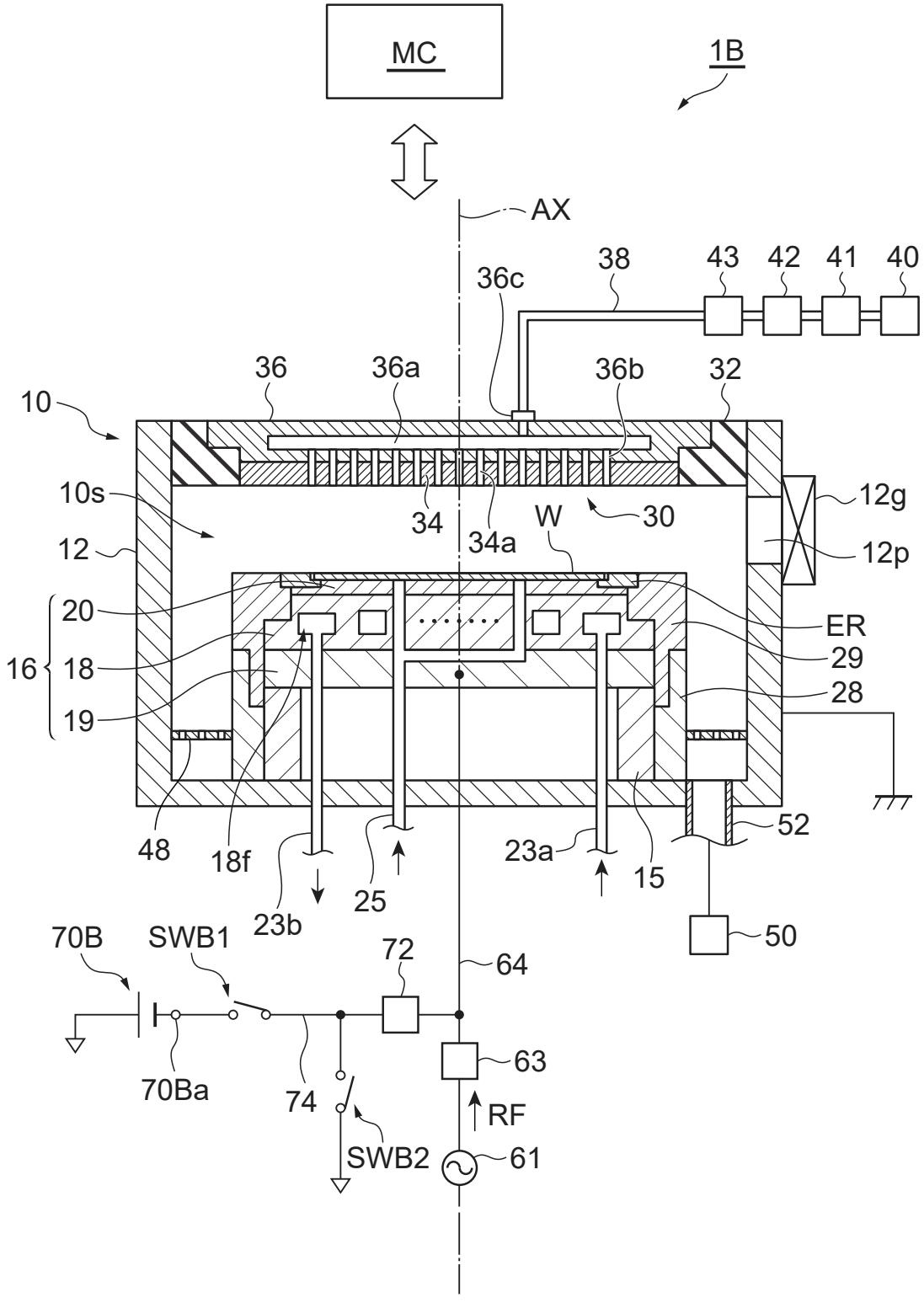
MC
1B
AX
38
43
42
41
40
36c
36
36a
36b
32
10
10s
34
34a
W
30
12g
12p
12
20
16
18
19
ER
29
28
48
18f
23b
25
23a
15
52
50
70B
SWB1
72
64
63
70Ba
74
RF
SWB2
61

Fig.8

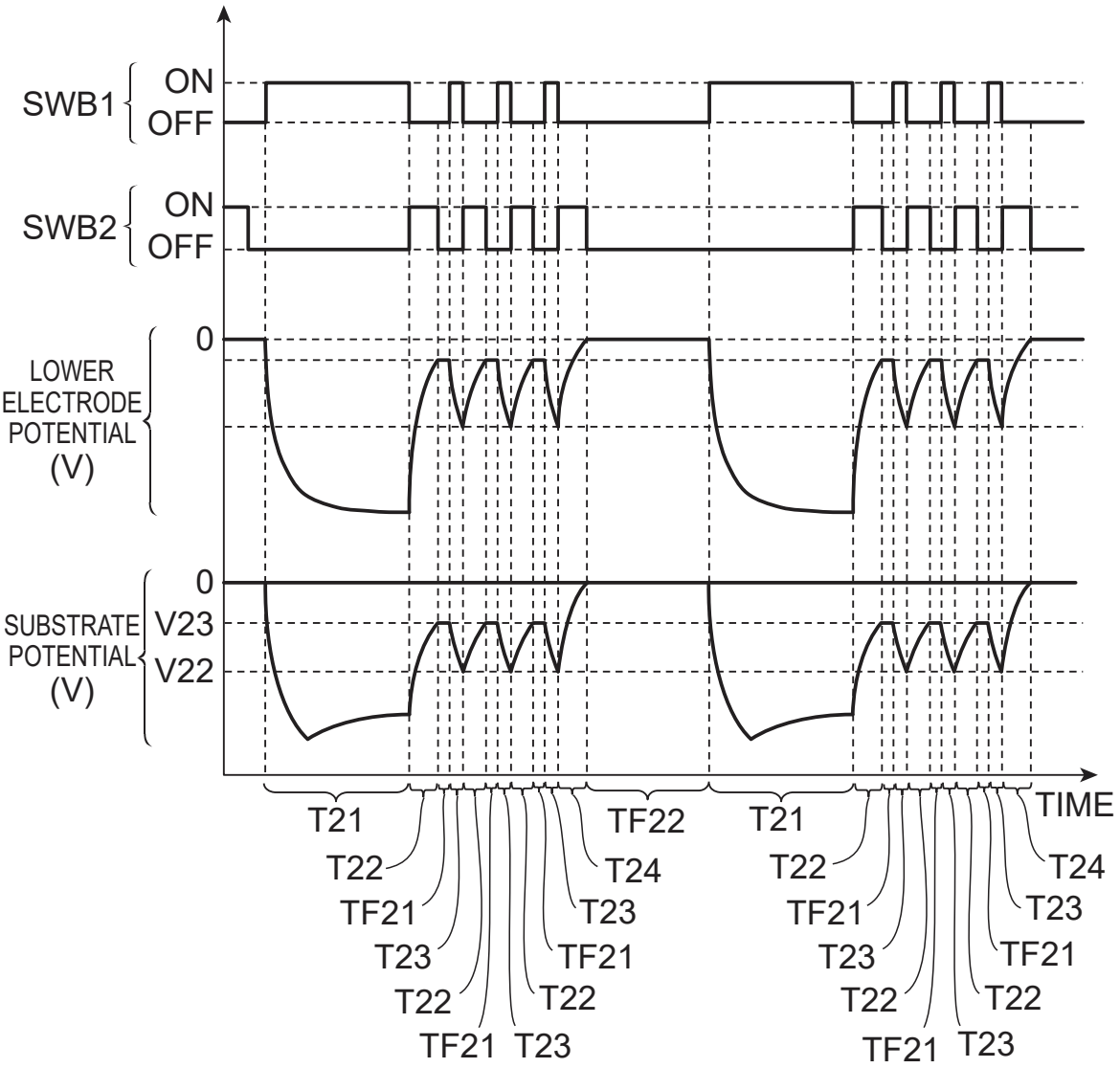
SWB1
ON
OFF
SWB2
ON
OFF
LOWER ELECTRODE POTENTIAL (V)
0
SUBSTRATE POTENTIAL (V)
0
V23
V22
TIME
T21
T22
TF21
T23
T22
TF21
T23
TF22
T24
T23
TF21
T22
T21
T22
TF21
T23
T22
TF21
T23
T24
T23
TF21
T22

Fig.9

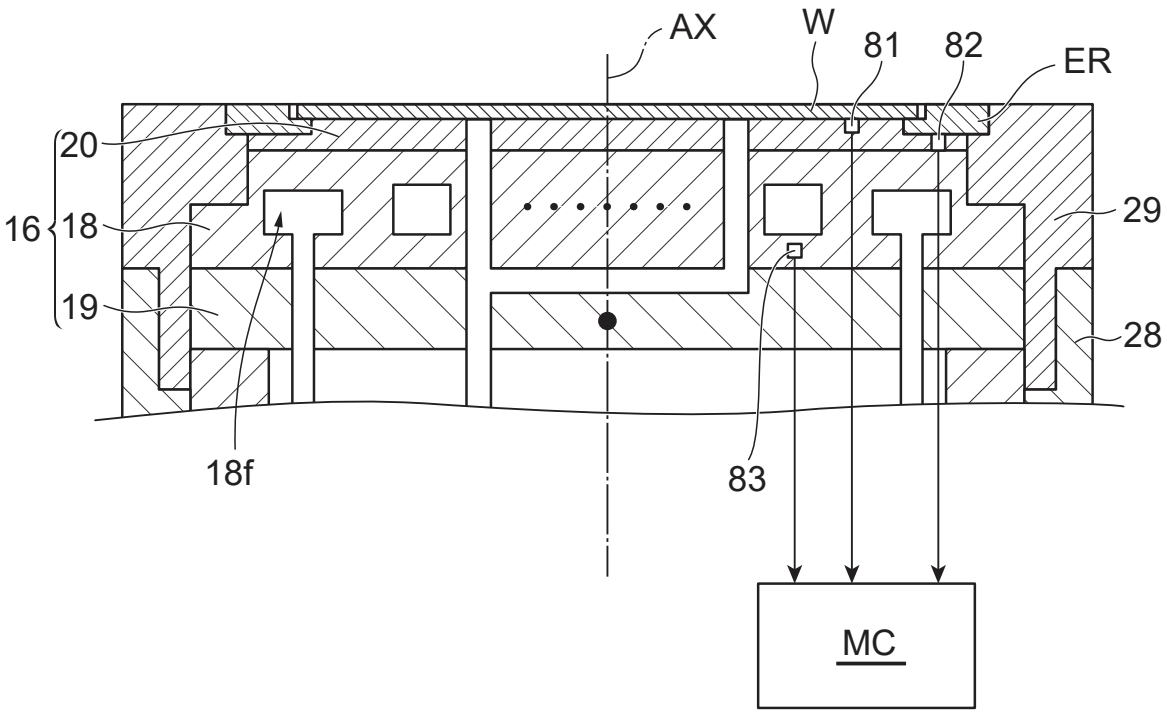

Fig.10

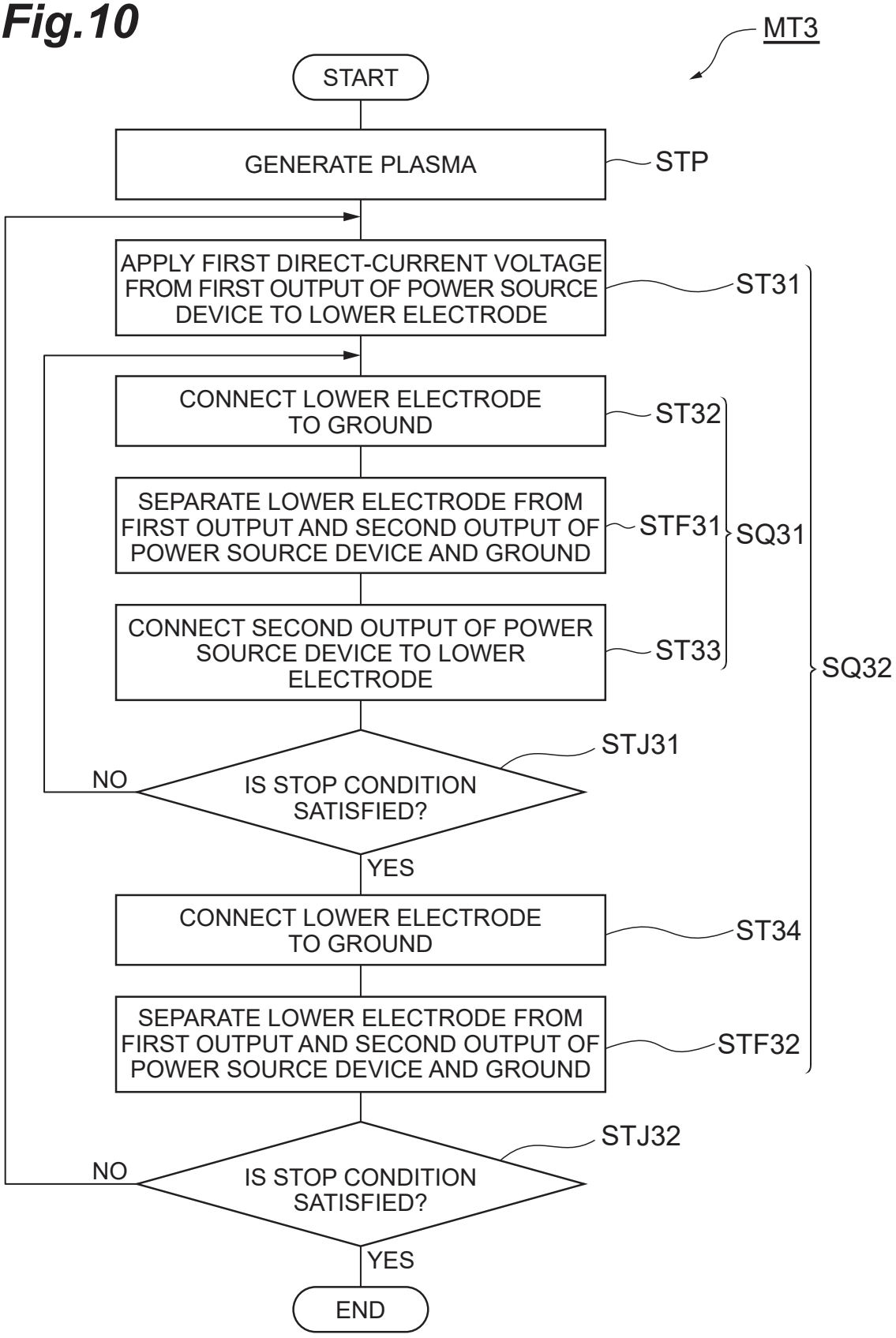
MT3
START
GENERATE PLASMA
STP
APPLY FIRST DIRECT-CURRENT VOLTAGE FROM FIRST OUTPUT OF POWER SOURCE DEVICE TO LOWER ELECTRODE
ST31
CONNECT LOWER ELECTRODE TO GROUND
ST32
SEPARATE LOWER ELECTRODE FROM FIRST OUTPUT AND SECOND OUTPUT OF POWER SOURCE DEVICE AND GROUND
STF31
SQ31
CONNECT SECOND OUTPUT OF POWER SOURCE DEVICE TO LOWER ELECTRODE
ST33
SQ32
STJ31
IS STOP CONDITION SATISFIED?
NO
YES
CONNECT LOWER ELECTRODE TO GROUND
ST34
SEPARATE LOWER ELECTRODE FROM FIRST OUTPUT AND SECOND OUTPUT OF POWER SOURCE DEVICE AND GROUND
STF32
STJ32
IS STOP CONDITION SATISFIED?
NO
YES
END

Fig.11

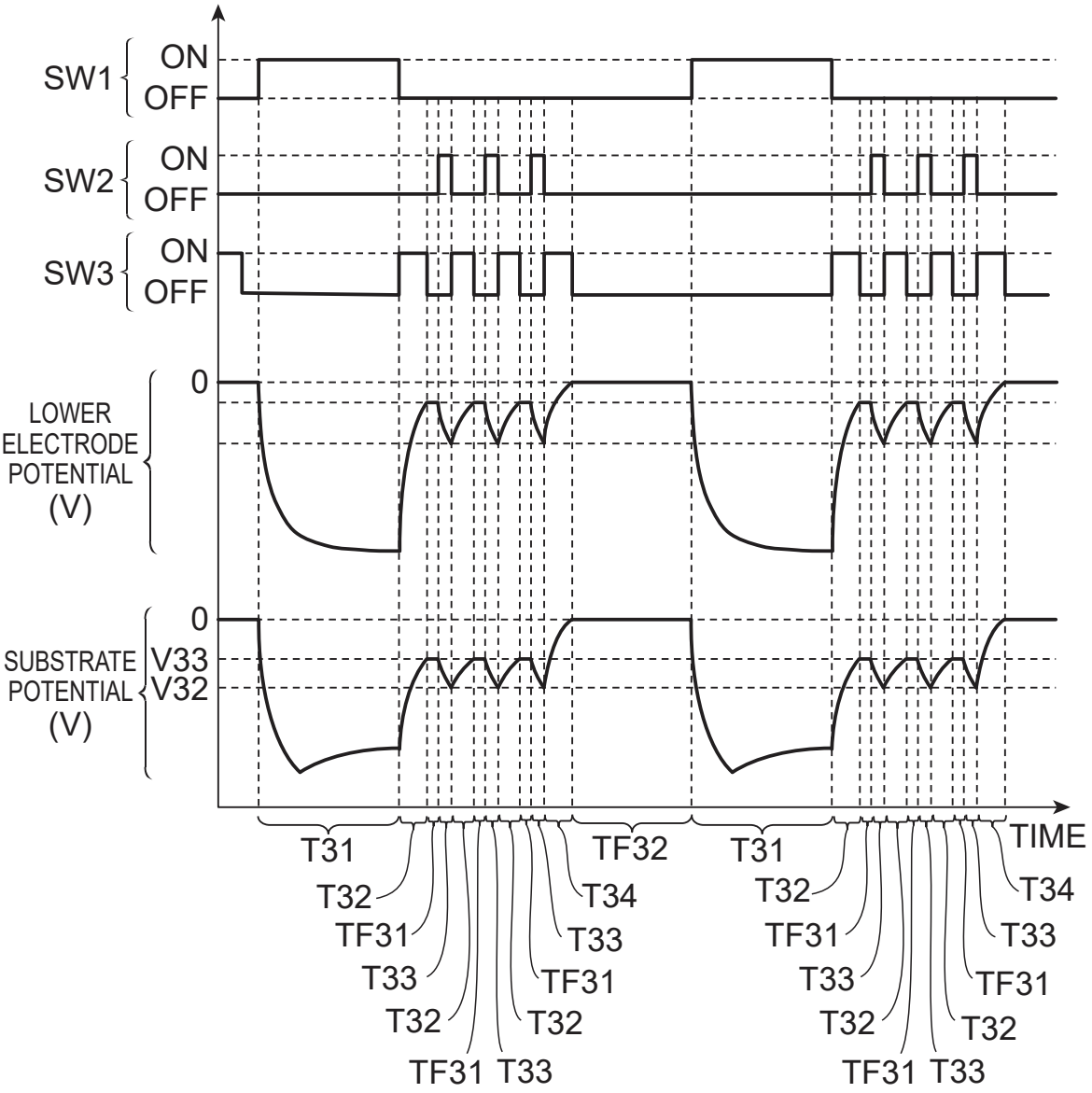
SW1
ON
OFF
SW2
ON
OFF
SW3
ON
OFF
LOWER ELECTRODE POTENTIAL (V)
0
SUBSTRATE POTENTIAL (V)
0
V33
V32
T31
T32
TF31
T33
T32
TF31
T33
T34
TF32
T31
T32
TF31
T33
T32
TF31
T33
T34
TIME