(12) INTERNATIONAL APPLICATION PUBLISHED UNDER THE PATENT COOPERATION TREATY (PCT)

(19) World Intellectual Property Organization
International Bureau

(43) International Publication Date
18 April 2013 (18.04.2013)

WIPO | PCT

(10) International Publication Number
WO 2013/055567 A2

(51) International Patent Classification:
H01R 12/71 (2011.01) *H01R 13/648* (2006.01)

(21) International Application Number:
PCT/US2012/058675

(22) International Filing Date:
4 October 2012 (04.10.2012)

(25) Filing Language: English

(26) Publication Language: English

(30) Priority Data:
61/547,288 14 October 2011 (14.10.2011) US
13/644,092 3 October 2012 (03.10.2012) US

(71) Applicant *(for all designated States except BR, CA, HN, US)*: **FCI** [FR/FR]; 18 Parc Ariane III, 3/5, rue Alfred Kastler, F-78280 Guyancourt (FR).

(71) Applicant *(for BR, CA, HN, MX only)*: **FCI AMERICAS TECHNOLOGY LLC** [US/US]; 502 East John Street, Carson City, Nevada 89706 (US).

(72) Inventor; and
(71) Applicant *(for US only)*: **ELLISON, Jason J.** [US/US]; 1811 Saint Clair Road, New Cumberland, Pennsylvania 17070 (US).

(74) Agents: **GEIBEL, Dean E.** et al.; FCI USA LLC, 825 Old Trail Road, Etters, PA 17319 (US).

(81) Designated States *(unless otherwise indicated, for every kind of national protection available)*: AE, AG, AL, AM, AO, AT, AU, AZ, BA, BB, BG, BH, BN, BR, BW, BY, BZ, CA, CH, CL, CN, CO, CR, CU, CZ, DE, DK, DM, DO, DZ, EC, EE, EG, ES, FI, GB, GD, GE, GH, GM, GT, HN, HR, HU, ID, IL, IN, IS, JP, KE, KG, KM, KN, KP, KR, KZ, LA, LC, LK, LR, LS, LT, LU, LY, MA, MD, ME, MG, MK, MN, MW, MX, MY, MZ, NA, NG, NI, NO, NZ, OM, PA, PE, PG, PH, PL, PT, QA, RO, RS, RU, RW, SC, SD, SE, SG, SK, SL, SM, ST, SV, SY, TH, TJ, TM, TN, TR, TT, TZ, UA, UG, US, UZ, VC, VN, ZA, ZM, ZW.

(84) Designated States *(unless otherwise indicated, for every kind of regional protection available)*: ARIPO (BW, GH, GM, KE, LR, LS, MW, MZ, NA, RW, SD, SL, SZ, TZ, UG, ZM, ZW), Eurasian (AM, AZ, BY, KG, KZ, RU, TJ, TM), European (AL, AT, BE, BG, CH, CY, CZ, DE, DK, EE, ES, FI, FR, GB, GR, HR, HU, IE, IS, IT, LT, LU, LV, MC, MK, MT, NL, NO, PL, PT, RO, RS, SE, SI, SK, SM, TR), OAPI (BF, BJ, CF, CG, CI, CM, GA, GN, GQ, GW, ML, MR, NE, SN, TD, TG).

Published:
— *without international search report and to be republished upon receipt of that report (Rule 48.2(g))*

(54) Title: CROSS TALK REDUCTION FOR HIGH-SPEED ELECTRICAL CONNECTORS

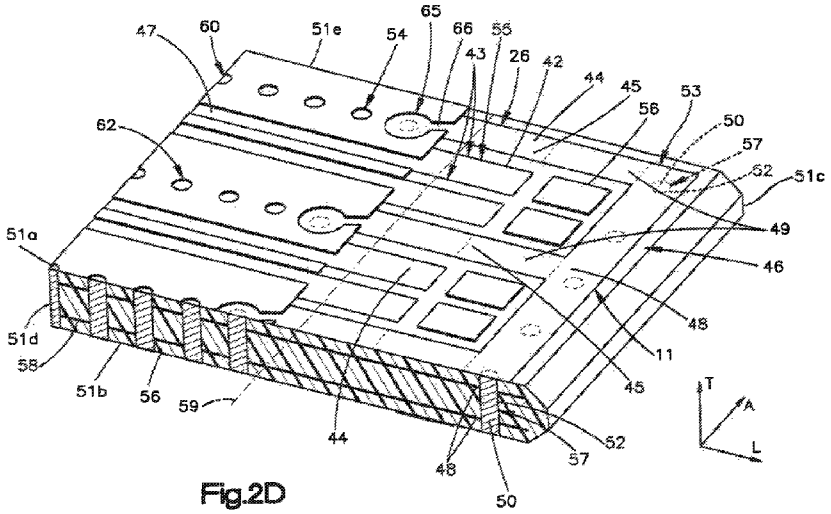

Fig.2D

(57) Abstract: An electrical connector includes a printed circuit board that includes a body that carries a plurality of ground conductors that define respective ground contact pads, and a plurality of signal conductors that define respective signal contact pads. The contact pads are configured to mate with electrical contacts of a complementary electrical connector. The printed circuit board includes a ground coupling assembly that electrically connects at least a pair of the ground conductors.

WO 2013/055567 A2