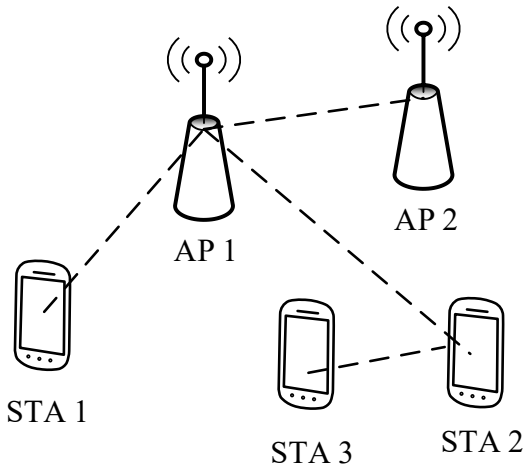

FIG. 1

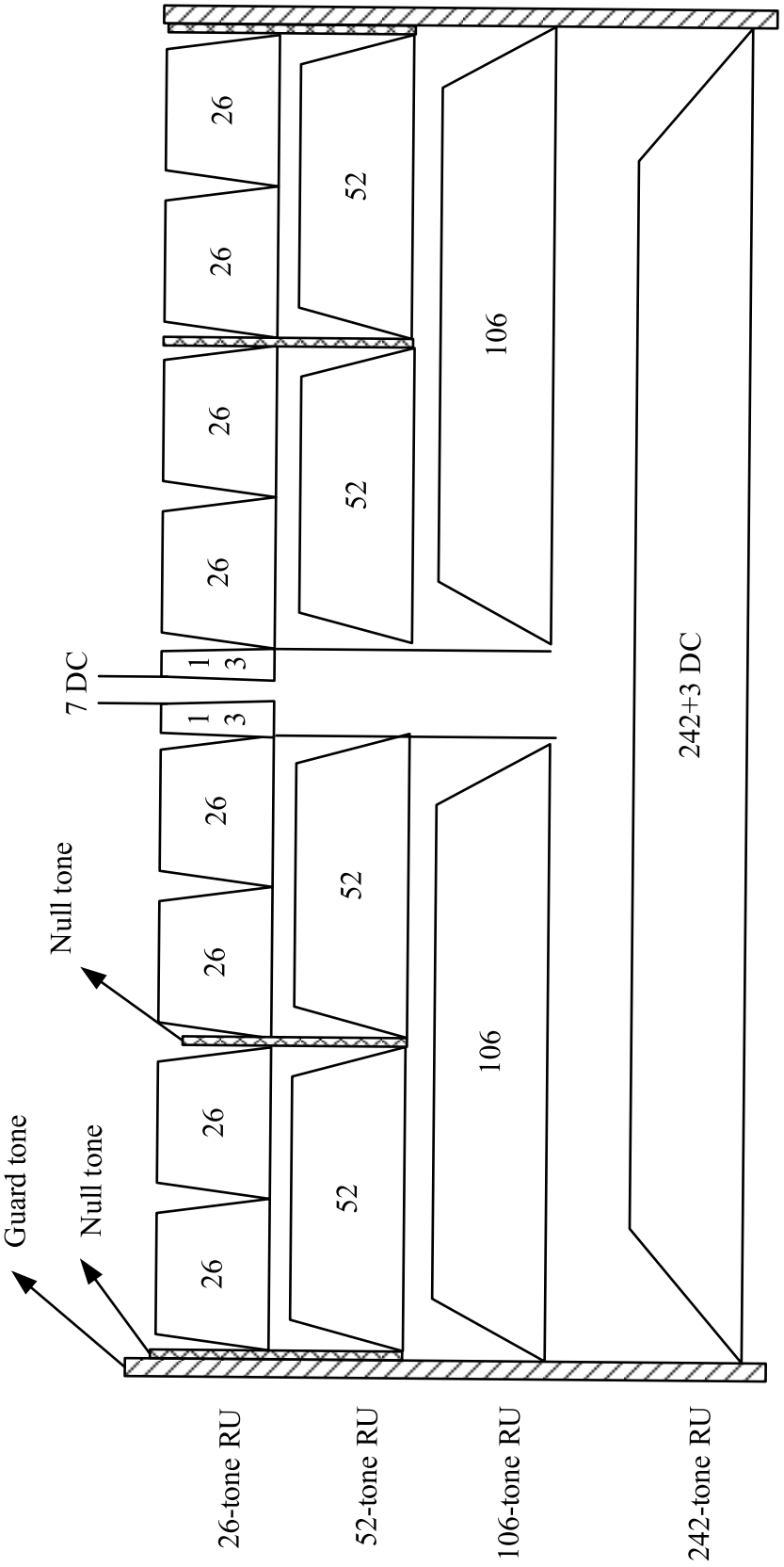
Guard tone
Null tone
Null tone
7 DC
242+3 DC
26
52
106
1
3
26-tone RU
52-tone RU
106-tone RU
242-tone RU

FIG. 2

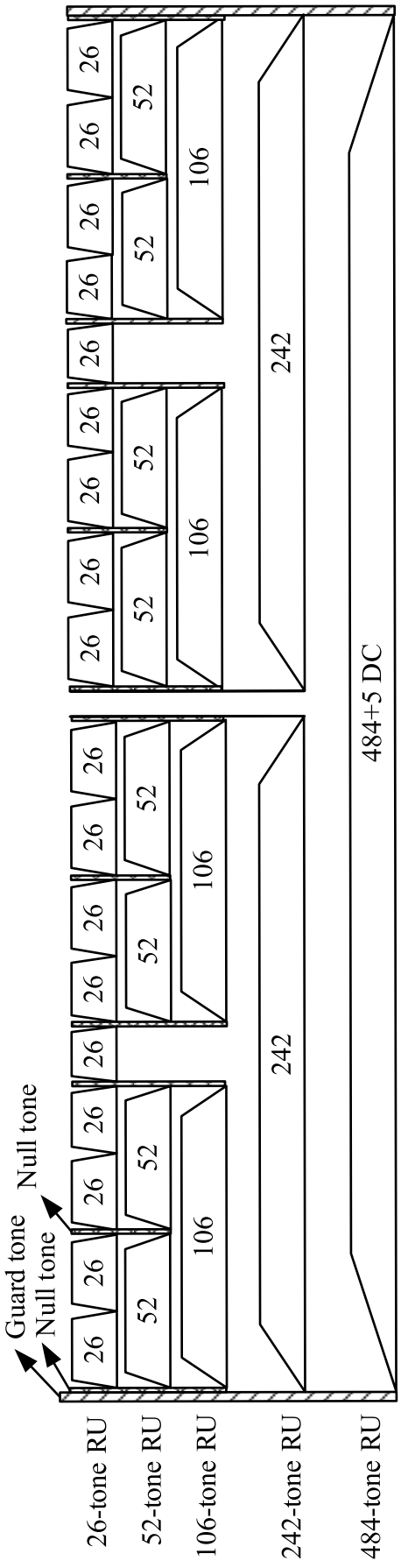
Guard tone
Null tone
Null tone
26-tone RU
52-tone RU
106-tone RU
242-tone RU
484-tone RU
26
52
106
242
484+5 DC

FIG. 3

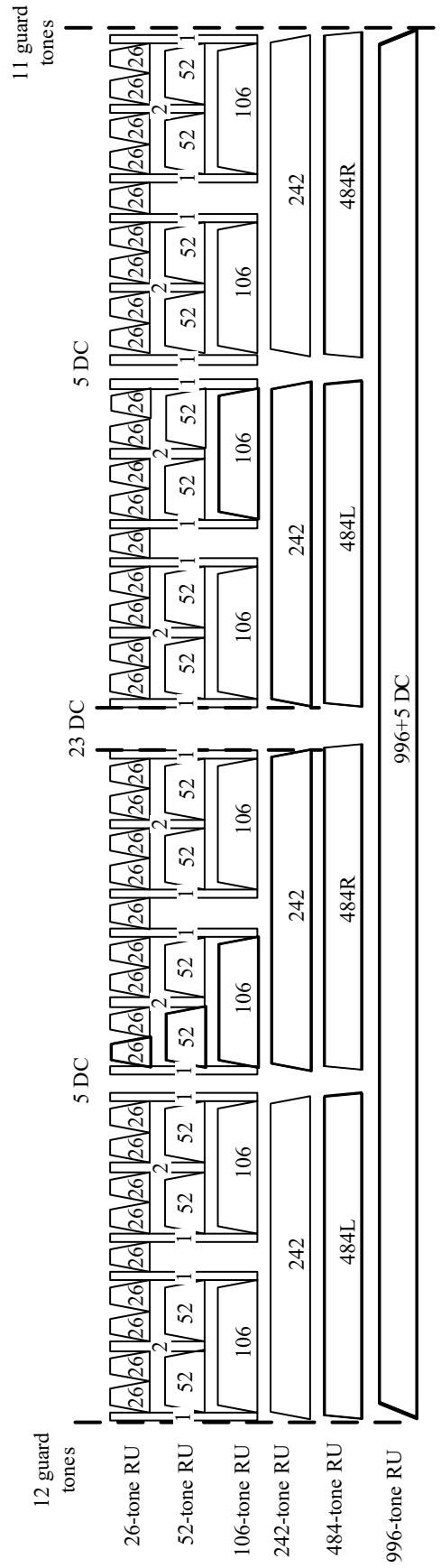
12 guard tones
11 guard tones
5 DC
23 DC
5 DC
26-tone RU
52-tone RU
106-tone RU
242-tone RU
484-tone RU
996-tone RU
996+5 DC

FIG. 4

Communication method 500

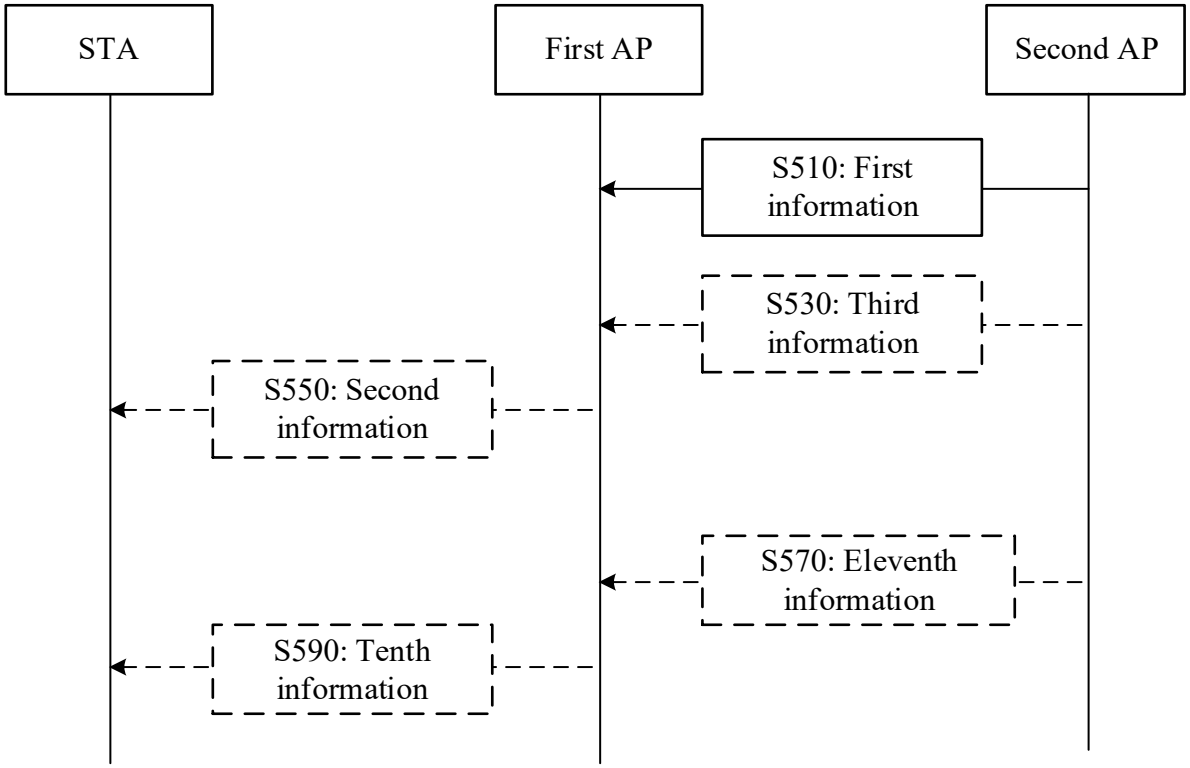

FIG. 5

Communication method 600

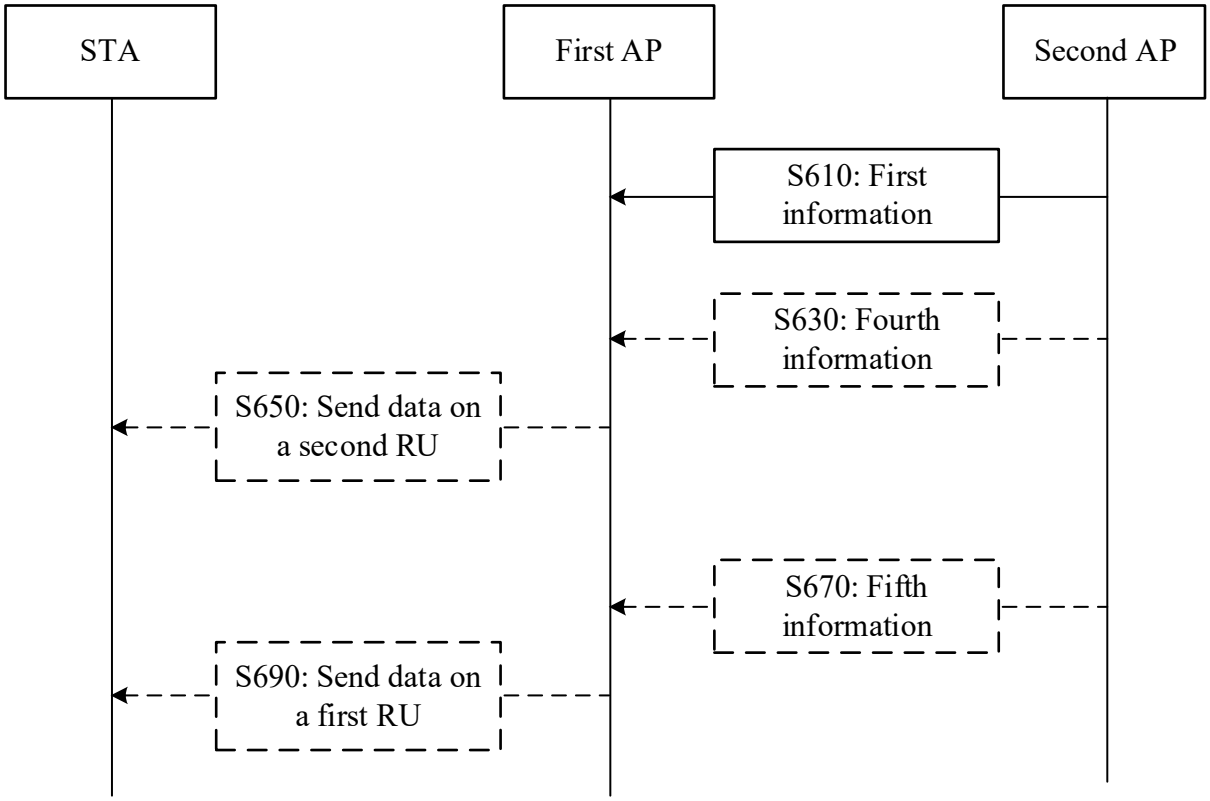

FIG. 6

Communication method 700

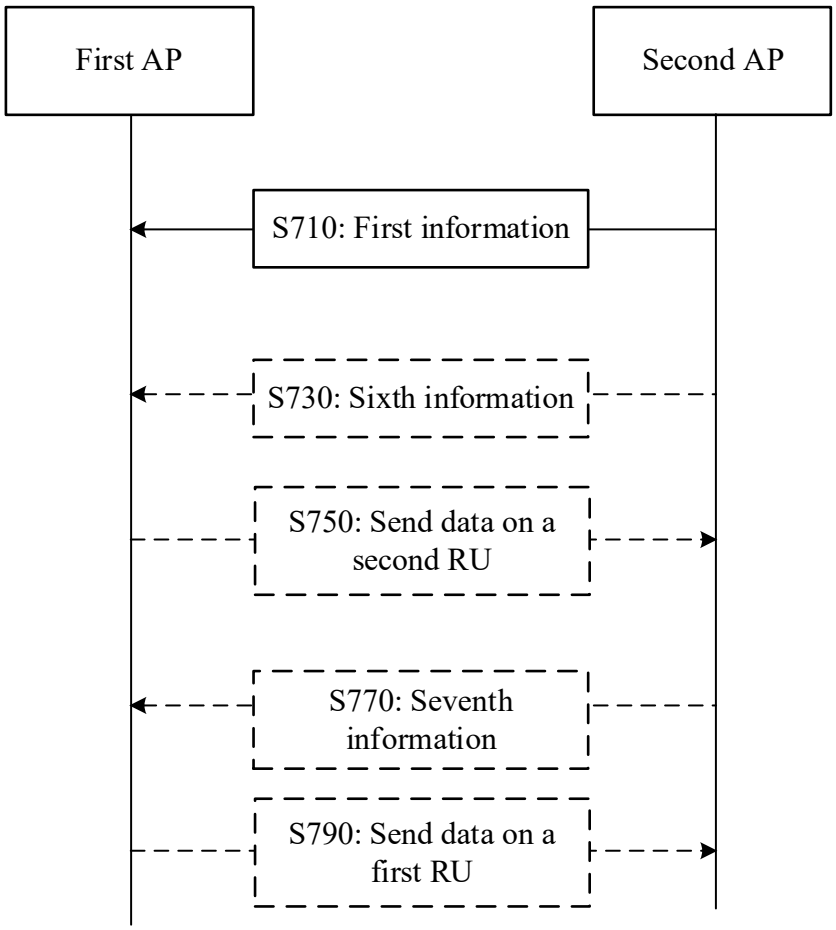

FIG. 7

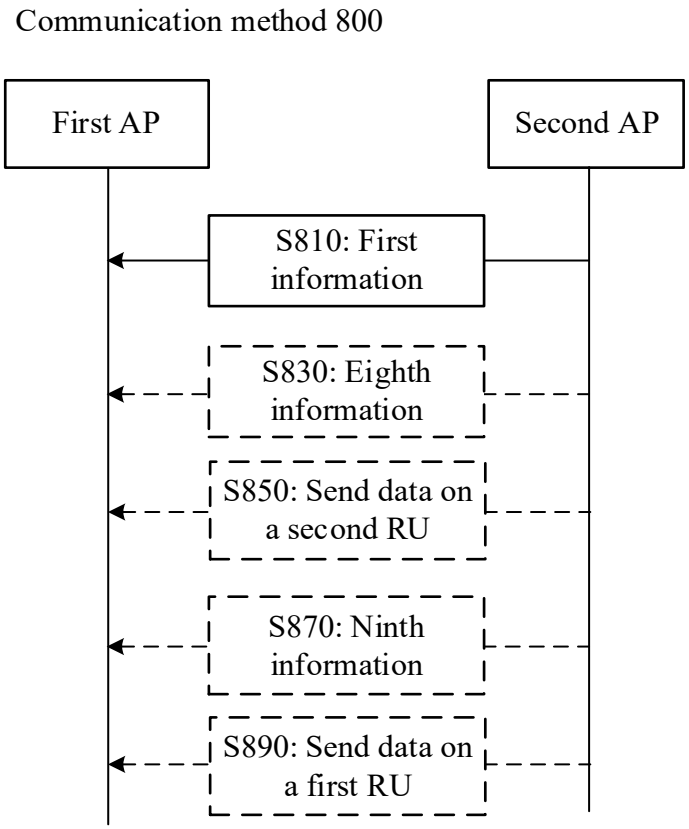
Communication method 800
First AP
Second AP
S810: First information
S830: Eighth information
S850: Send data on a second RU
S870: Ninth information
S890: Send data on a first RU

FIG. 8

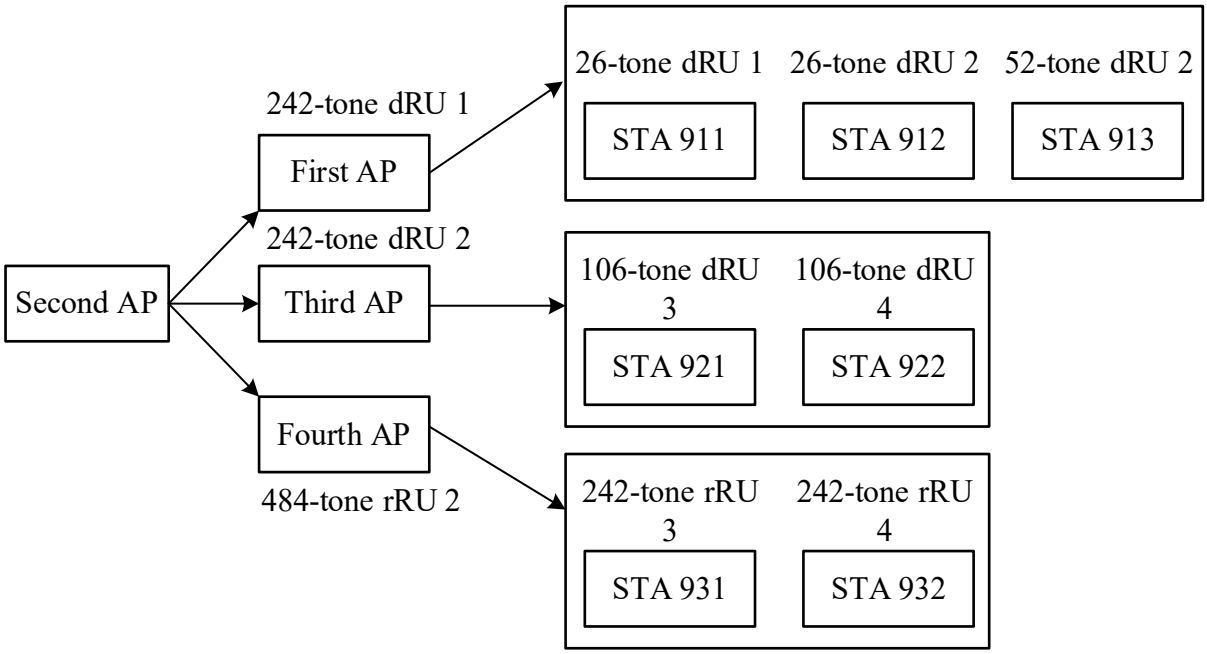
26-tone dRU 1
26-tone dRU 2
52-tone dRU 2
STA 911
STA 912
STA 913
242-tone dRU 1
First AP
242-tone dRU 2
Second AP
Third AP
106-tone dRU 3
106-tone dRU 4
STA 921
STA 922
Fourth AP
484-tone rRU 2
242-tone rRU 3
242-tone rRU 4
STA 931
STA 932

FIG. 9

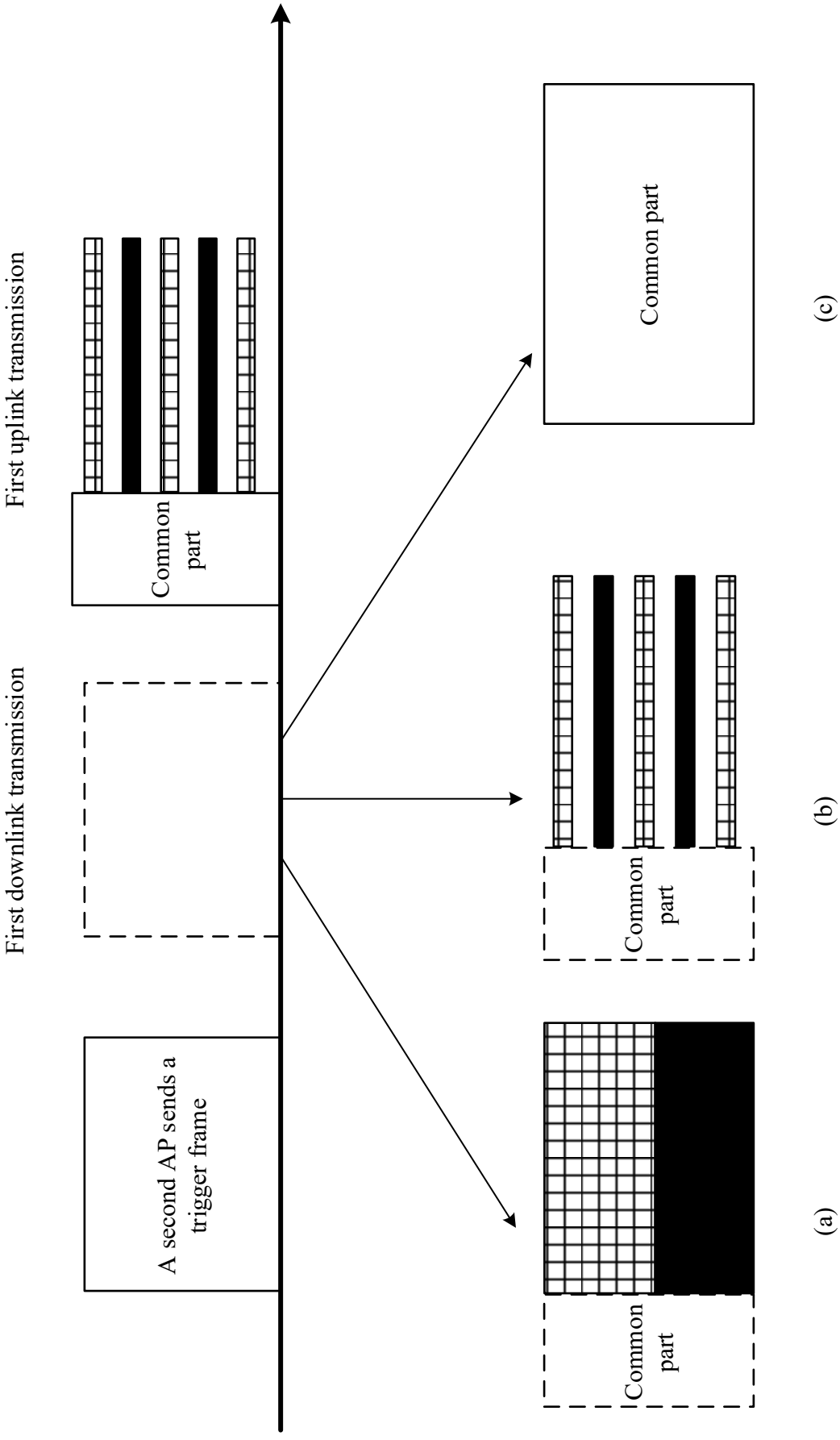
First uplink transmission
First downlink transmission
A second AP sends a trigger frame
Common part
Common part
Common part
Common part
(a)
(b)
(c)

FIG. 10

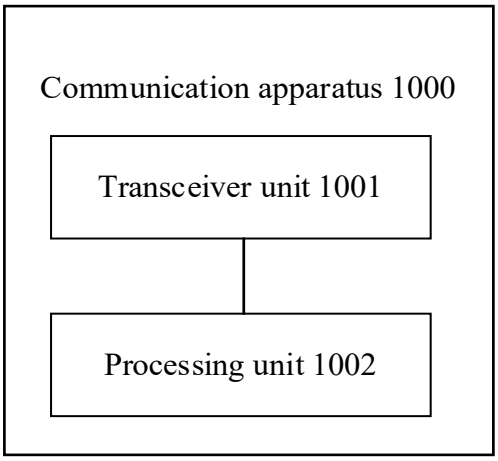

FIG. 11

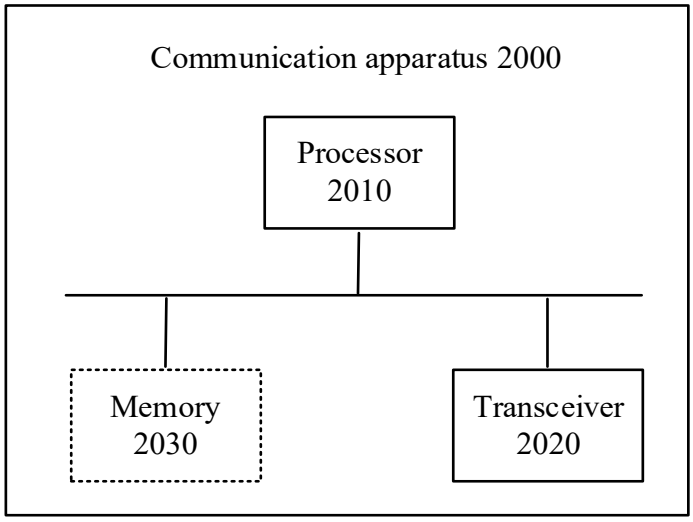

FIG. 12

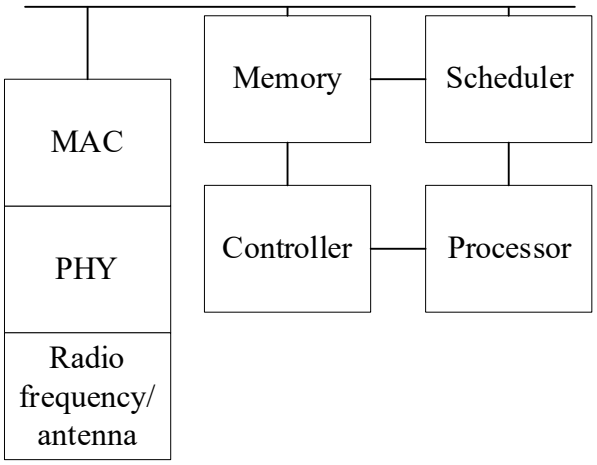

FIG. 13