(12) INTERNATIONAL APPLICATION PUBLISHED UNDER THE PATENT COOPERATION TREATY (PCT)

(19) World Intellectual Property Organization
International Bureau

(43) International Publication Date
14 May 2010 (14.05.2010)

PCT

(10) International Publication Number
WO 2010/053915 A3

(51) **International Patent Classification**:
C30B 15/00 (2006.01) *C30B 29/06* (2006.01)

(21) **International Application Number**:
PCT/US2009/063114

(22) **International Filing Date**:
3 November 2009 (03.11.2009)

(25) **Filing Language**: English

(26) **Publication Language**: English

(30) **Priority Data**:
61/111,536 5 November 2008 (05.11.2008) US

(71) **Applicant** *(for all designated States except US)*: **MEMC ELECTRONIC MATERIALS, INC.** [US/US]; 501 Pearl Drive, St. Peters, Missouri 63376 (US).

(72) **Inventors; and**

(75) **Inventors/Applicants** *(for US only)*: **MASSOUD, Javidi** [IR/US]; 1879 Lunenbury Drive, St. Peters, Missouri 63376 (US). **KIMBEL, Steven L.** [US/US]; MEMC Electronic Materials, Inc., 501 Pearl Drive, St. Peters, Missouri 63376 (US).

(74) **Agents**: **VANDER MOLEN, Michael, J.** et al.; Armstrong Teasdale LLP, One Metropolitan Square, 26th Floor, St. Louis, Missouri 63102 (US).

(81) **Designated States** *(unless otherwise indicated, for every kind of national protection available)*: AE, AG, AL, AM, AO, AT, AU, AZ, BA, BB, BG, BH, BR, BW, BY, BZ, CA, CH, CL, CN, CO, CR, CU, CZ, DE, DK, DM, DO, DZ, EC, EE, EG, ES, FI, GB, GD, GE, GH, GM, GT, HN, HR, HU, ID, IL, IN, IS, JP, KE, KG, KM, KN, KP, KR, KZ, LA, LC, LK, LR, LS, LT, LU, LY, MA, MD, ME, MG, MK, MN, MW, MX, MY, MZ, NA, NG, NI, NO, NZ, OM, PE, PG, PH, PL, PT, RO, RS, RU, SC, SD, SE, SG, SK, SL, SM, ST, SV, SY, TJ, TM, TN, TR, TT, TZ, UA, UG, US, UZ, VC, VN, ZA, ZM, ZW.

(84) **Designated States** *(unless otherwise indicated, for every kind of regional protection available)*: ARIPO (BW, GH, GM, KE, LS, MW, MZ, NA, SD, SL, SZ, TZ, UG, ZM, ZW), Eurasian (AM, AZ, BY, KG, KZ, MD, RU, TJ,

[Continued on next page]

(54) **Title**: METHODS FOR PREPARING A MELT OF SILICON POWDER FOR SILICON CRYSTAL GROWTH

(57) **Abstract**: Methods for preparing a melt from silicon powder for use in growing a single crystal or polycrystalline silicon ingot in accordance with the Czochralski method that include removal of silicon oxides from the powder; application of a vacuum to remove air and other oxidizing gases; controlling the position of the charge relative to the heater during and after melting of the powder and maintaining the charge above its melting temperature for a period of time to allow oxides to dissolve; and use of a removable spacer between the crucible sidewall and the silicon powder charge to reduce oxides and silicon bridging.

FIG. 1

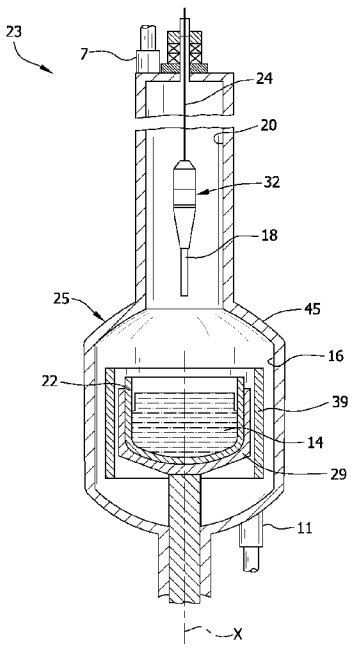

WO 2010/053915 A3

TM), European (AT, BE, BG, CH, CY, CZ, DE, DK, EE, ES, FI, FR, GB, GR, HR, HU, IE, IS, IT, LT, LU, LV, MC, MK, MT, NL, NO, PL, PT, RO, SE, SI, SK, SM, TR), OAPI (BF, BJ, CF, CG, CI, CM, GA, GN, GQ, GW, ML, MR, NE, SN, TD, TG).

Published:

— *with international search report (Art. 21(3))*

— *before the expiration of the time limit for amending the claims and to be republished in the event of receipt of amendments (Rule 48.2(h))*

(88) Date of publication of the international search report:
10 September 2010