FIG.1

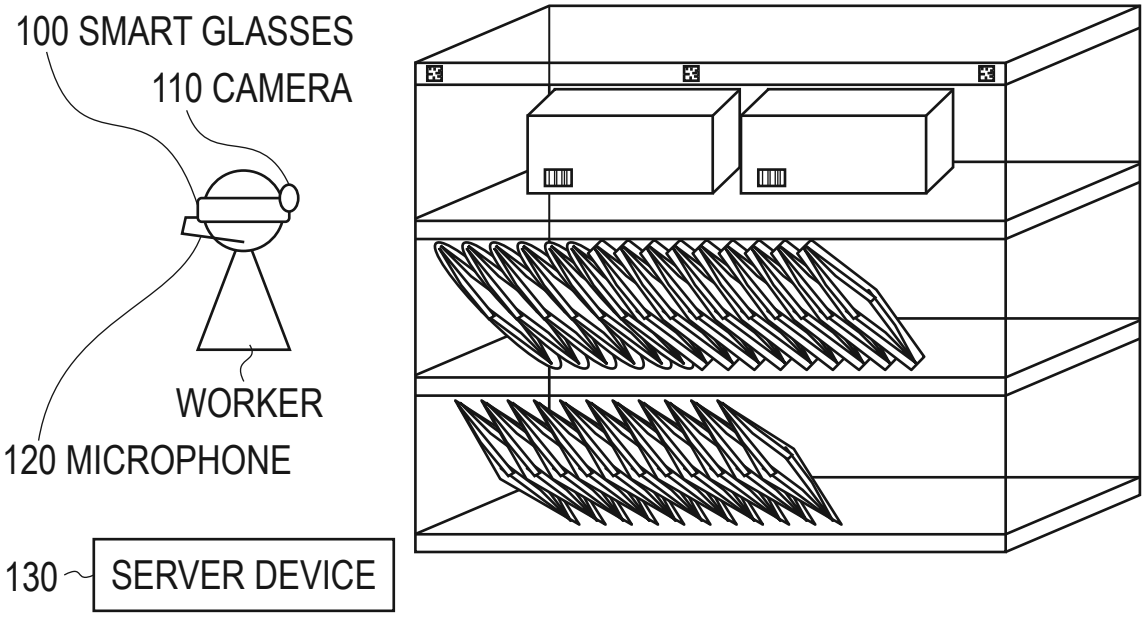
100 SMART GLASSES
110 CAMERA
WORKER
120 MICROPHONE
130
SERVER DEVICE

FIG.2A

USE STATE

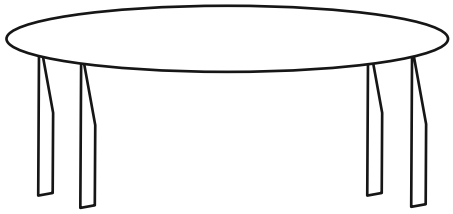

FIG.2B

STATE LOADED IN SHELF IN WAREHOUSE
(PACKING STYLE)

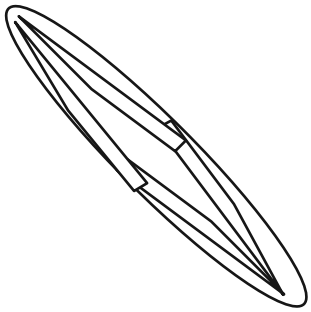

FIG.3

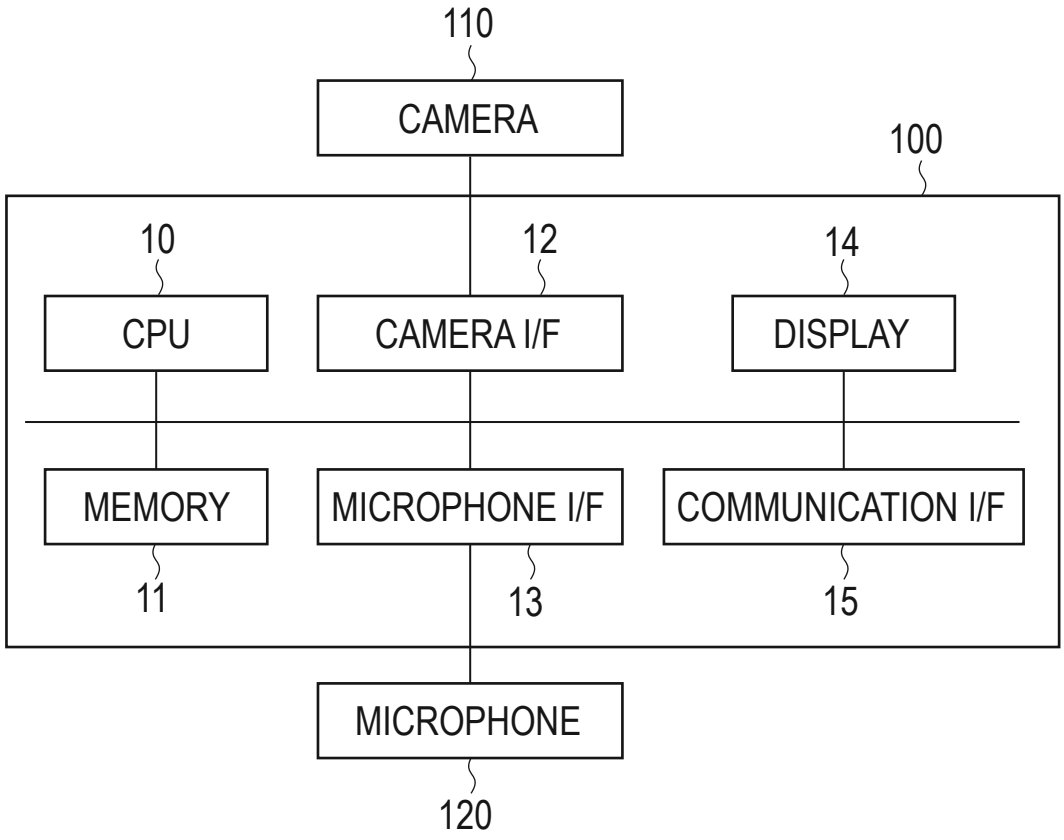
110
CAMERA
100
10
12
14
CPU
CAMERA I/F
DISPLAY
MEMORY
MICROPHONE I/F
COMMUNICATION I/F
11
13
15
MICROPHONE
120

FIG.4

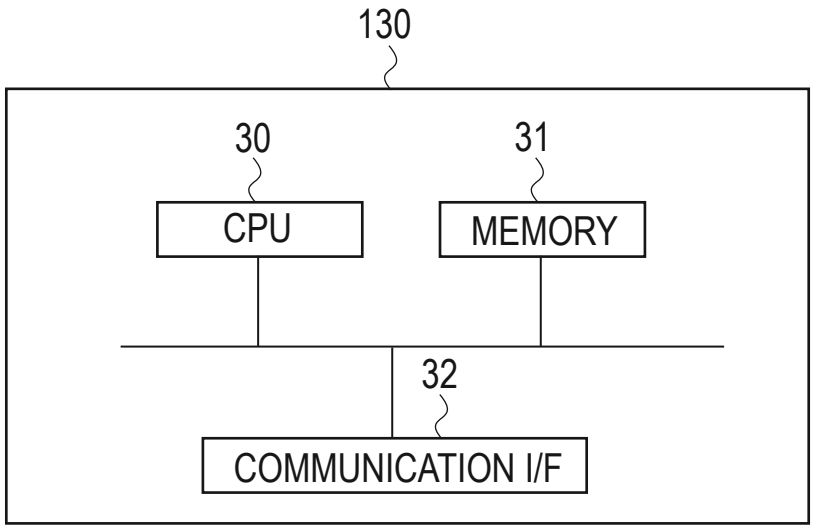

FIG.5

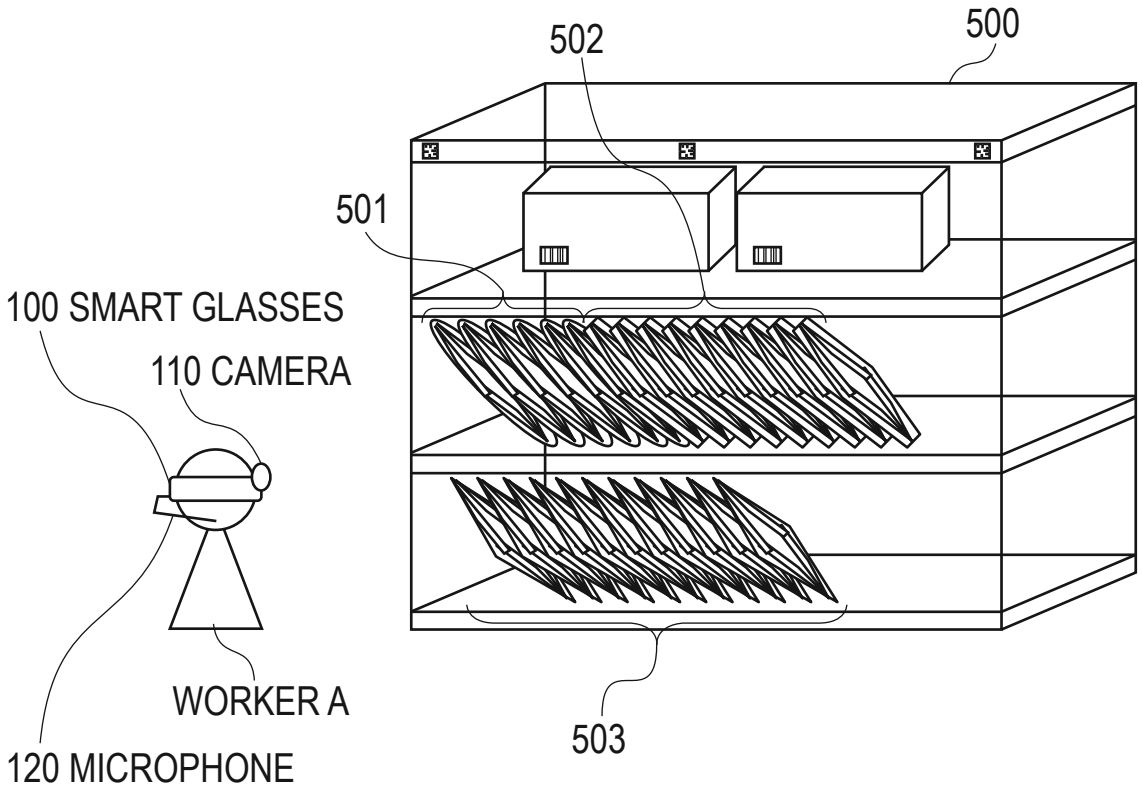
500
502
501
100 SMART GLASSES
110 CAMERA
WORKER A
120 MICROPHONE
503

FIG.6

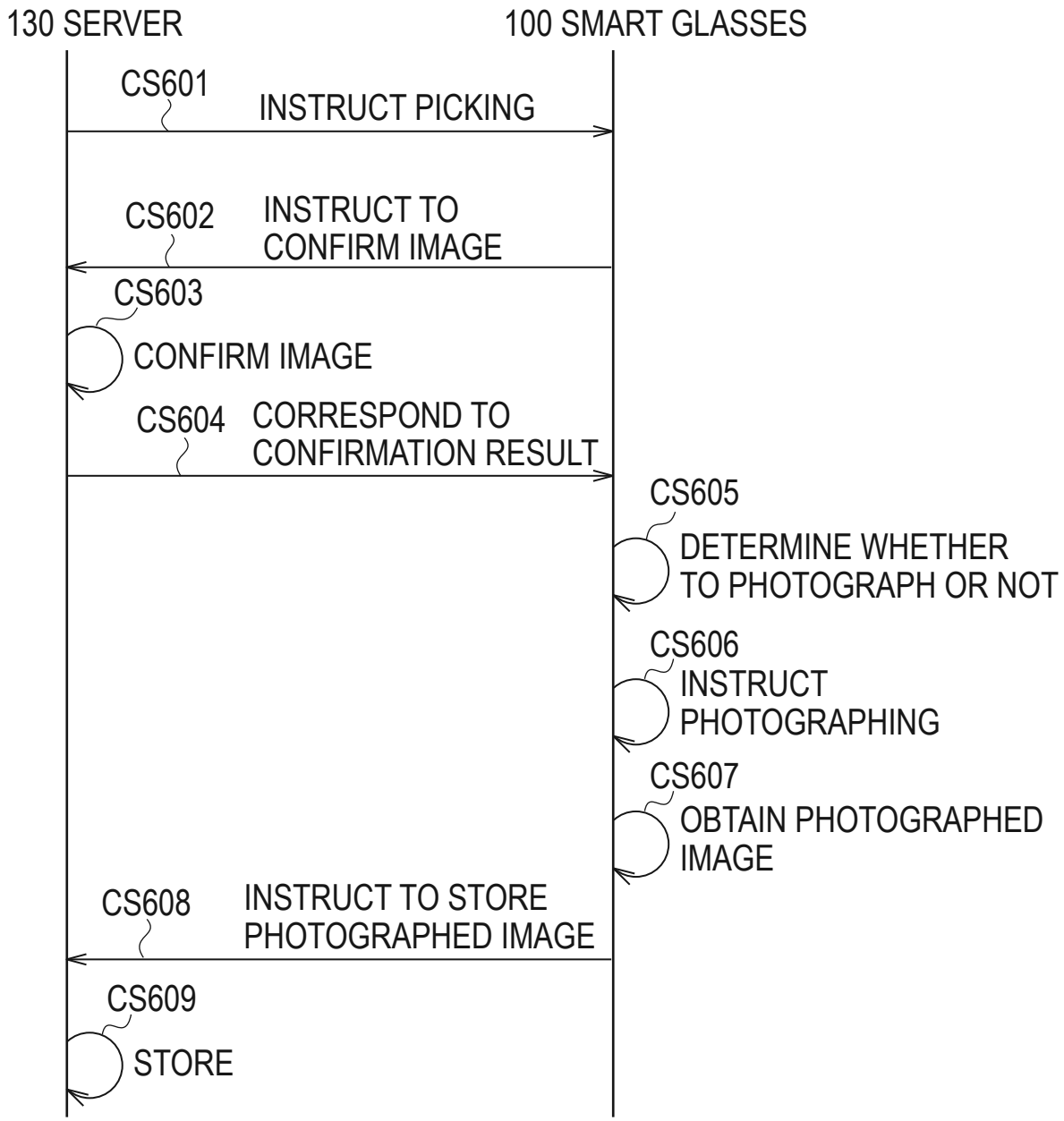
130 SERVER
100 SMART GLASSES
CS601
INSTRUCT PICKING
CS602
INSTRUCT TO CONFIRM IMAGE
CS603
CONFIRM IMAGE
CS604
CORRESPOND TO CONFIRMATION RESULT
CS605
DETERMINE WHETHER TO PHOTOGRAPH OR NOT
CS606
INSTRUCT PHOTOGRAPHING
CS607
OBTAIN PHOTOGRAPHED IMAGE
CS608
INSTRUCT TO STORE PHOTOGRAPHED IMAGE
CS609
STORE

FIG.7

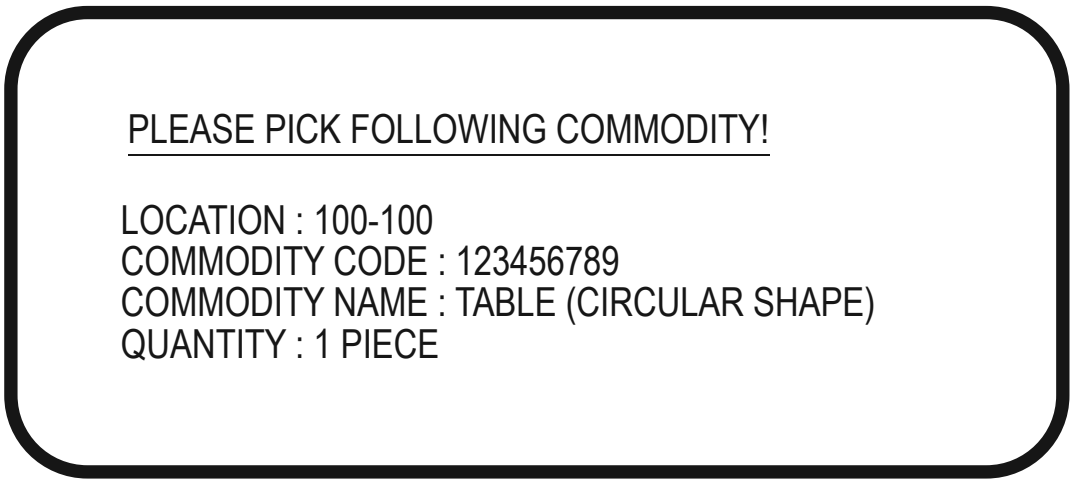
PLEASE PICK FOLLOWING COMMODITY!
LOCATION : 100-100
COMMODITY CODE : 123456789
COMMODITY NAME : TABLE (CIRCULAR SHAPE)
QUANTITY : 1 PIECE

FIG.8

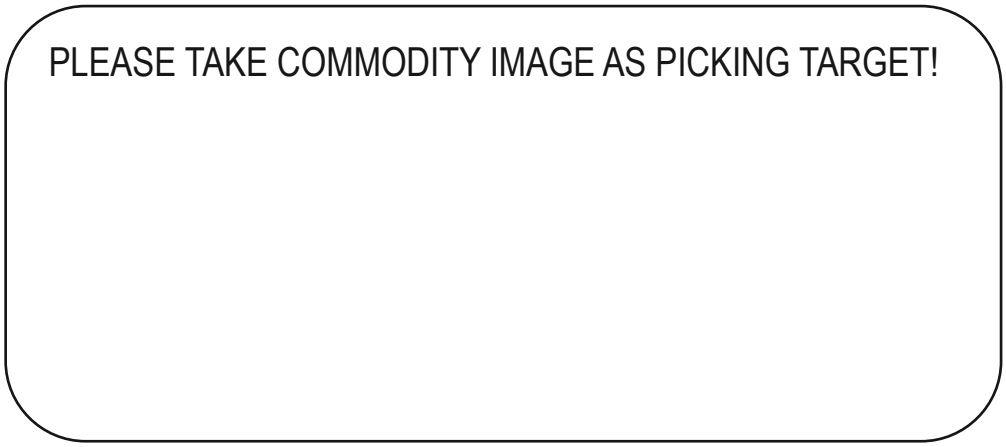

FIG.9

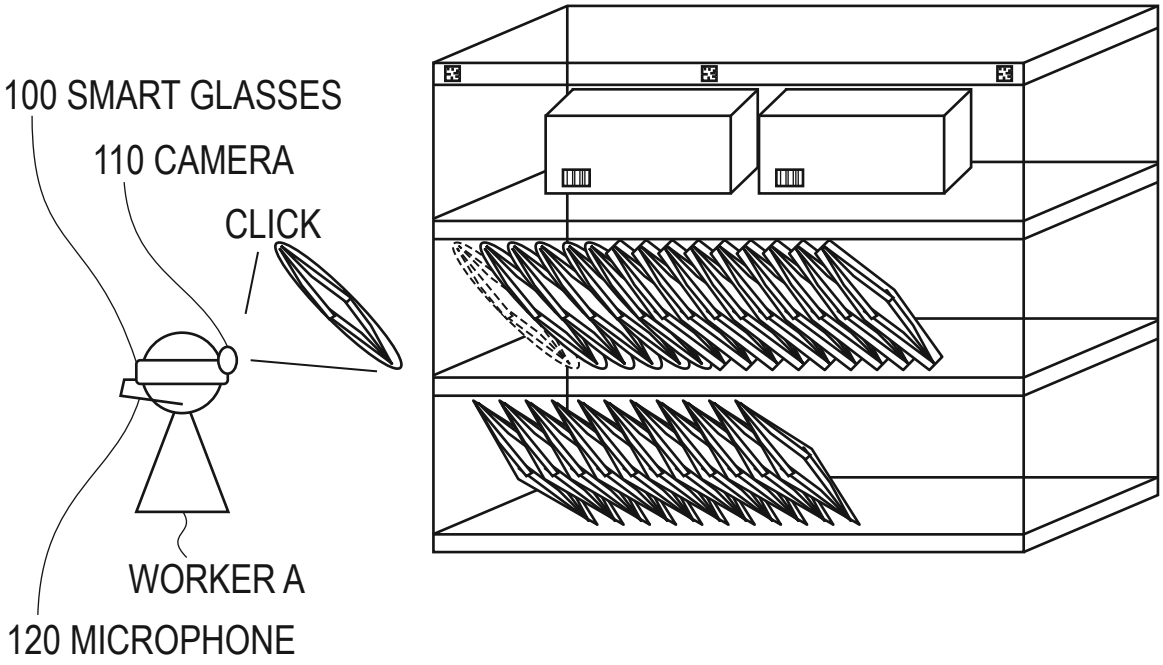

FIG.10

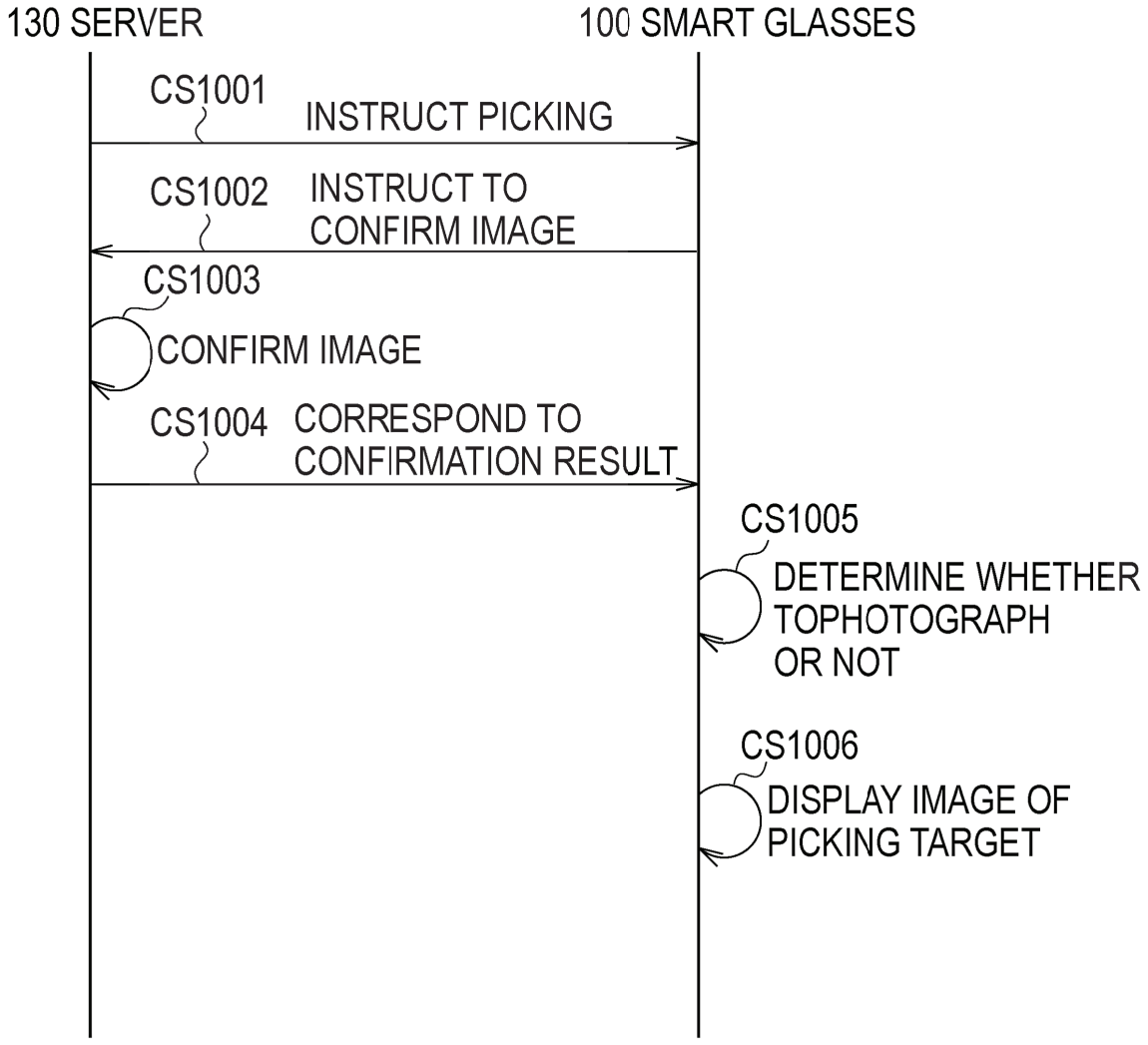
130 SERVER
100 SMART GLASSES
CS1001
INSTRUCT PICKING
CS1002
INSTRUCT TO CONFIRM IMAGE
CS1003
CONFIRM IMAGE
CS1004
CORRESPOND TO CONFIRMATION RESULT
CS1005
DETERMINE WHETHER TOPHOTOGRAPH OR NOT
CS1006
DISPLAY IMAGE OF PICKING TARGET

FIG.11



FIG.12

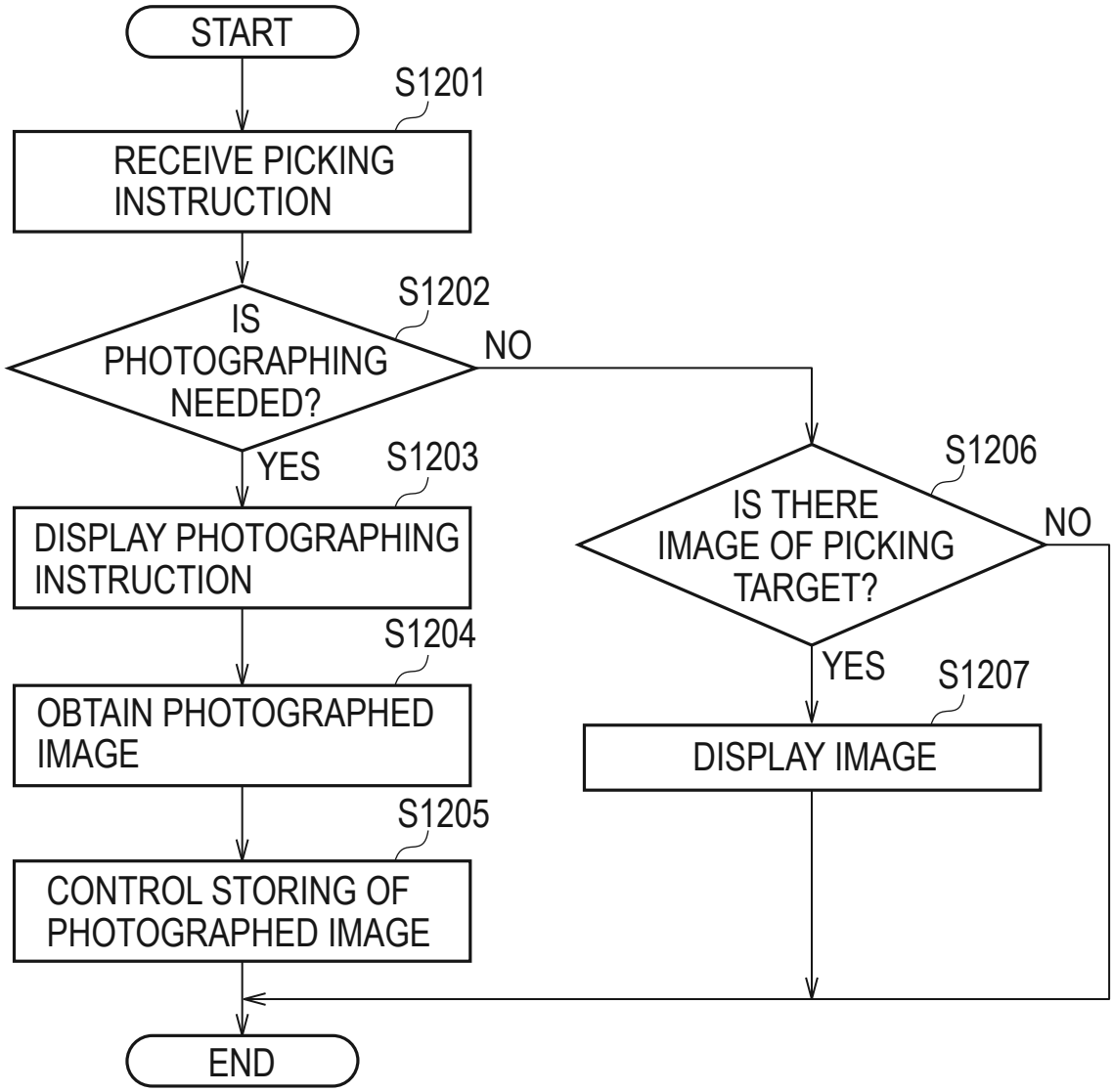
START
S1201
RECEIVE PICKING INSTRUCTION
S1202
IS PHOTOGRAPHING NEEDED?
NO
YES
S1203
DISPLAY PHOTOGRAPHING INSTRUCTION
S1204
OBTAIN PHOTOGRAPHED IMAGE
S1205
CONTROL STORING OF PHOTOGRAPHED IMAGE
S1206
IS THERE IMAGE OF PICKING TARGET?
NO
YES
S1207
DISPLAY IMAGE
END

FIG.13

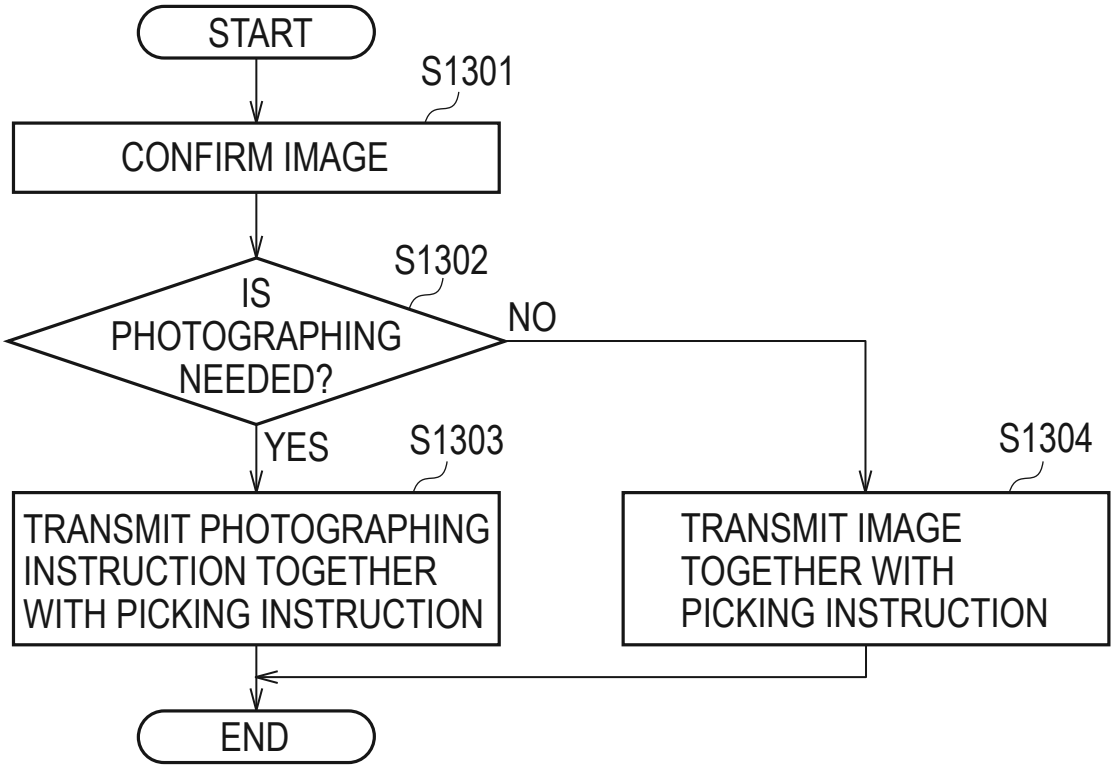
START
S1301
CONFIRM IMAGE
S1302
IS PHOTOGRAPHING NEEDED?
NO
YES
S1303
TRANSMIT PHOTOGRAPHING INSTRUCTION TOGETHER WITH PICKING INSTRUCTION
S1304
TRANSMIT IMAGE TOGETHER WITH PICKING INSTRUCTION
END