REPLACED SHEETS SG
☑ Description : paged ..... 1 ..... to paged ..... 26 .....
☑ Claim(s) : paged ..... 1 page ..... to paged .....
☐ Drawing(s) : paged ..... 1 page ..... to paged .....
☑ Abstract : paged ..... 1 page ..... to paged .....

RTMP's Copy

A LOW EMISSIVITY FILM

This invention relates to a low emissivity film which is excellent in durability, especially in moisture resistance or in acid resistance.

A film composed of (2n+1) layers ($n \geq 1$) such as a film composed of three layers in which an oxide film, an Ag film, and an oxide film are successively coated on a surface of a substrate, or a film composed of five layers in which an oxide film, an Ag film, an oxide film, an Ag film, and an oxide film are successively coated on a surface of a substrate, is a heat reflective film called Low-E (Low-Emissivity) film. A glass in which such a Low-E film is formed, is called a Low-E glass. This glass can prevent lowering of room temperature by reflecting the thermal infrared radiation emitted from within the heated room, which is used mainly in cold district on the purpose of decreasing heating load. Furthermore, since this glass has a heat insulating effect of the solar radiation energy, it is adopted in a windshield of an automobile. Since this glass is

This Sheet Has Been Replaced

transparent and is electrically conductive, it has a usage as an electromagnetic shielding glass. When this glass is equipped with an electric heating such as a bus bar composed of an electrically conductive printing or the like, this glass can be used as an electrically heated window.

As a major Low-E glass, a glass is exemplified having a film composition of ZnO/Ag/ZnO/glass. However, since this film is devoid of durability such as anti-scratching property or chemical stability, it can not be used on a single plate, and it is necessary to use the film in a laminated glass or in double glazing. This film has a problem especially in moisture resistance, in which white dot or white turbidity is caused by moisture in the air or by moisture contained in an intermediate film in case of the laminated glass. Furthermore, since ZnO is insufficient in acid resistance, the film may be deteriorated by acid substance in the air. Due to these shortcomings, caution is required in the storage or in the handling of the single plate.

It is an object of the present invention to provide a Low-E film capable of overcoming the above shortcomings, and excellent in the durability, especially in the moisture resistance or in the acid resistance.

According to an aspect of the present invention, there is provided a low emissivity film which comprises:

a substrate; and

This Sheet Has Been Replaced

a coating of oxide and metallic films alternately formed on the substrate in a total of (2n+1) layers where n is an integer being equal to or more than 1, with the innermost layer being an oxide film,

wherein the oxide film (B) formed on the outer side of the metallic film (A) being most apart from the substrate, has an internal stress which is equal to, or less than 1.1×10^{10} dyne/cm^2.

According to another aspect of the present invention, there is provided a low emissivity film which comprises:

a substrate; and

a coating of oxide and metallic films alternately formed on the substrate in a total of (2n+1) layers where n is an integer being equal to or more than 1, with the innermost layer being an oxide film,

wherein the oxide film (B) formed on the outer side of the metallic film (A) being mostly apart from the substrate, is a single layer film or a multi-layer film having at least a film whose major component is hexagonal zinc oxide; and

a value of a diffraction angle 2θ (center of gravity position) of (002) diffraction line of the hexagonal zinc oxide of the low emissivity film in X-ray diffraction method using CuKα radiation is not smaller than 33.88° and not larger than 35.00°.

According to another aspect of the present invention, there is provided a low emissivity film which comprises:

This Sheet Has Been Replaced



a substrate; and

a coating of oxide and metallic films alternately formed on the substrate in a total of (2n+1) layers where n is an integer being equal to or more than 1, with the innermost layer being an oxide film,

wherein the oxide film (B) formed on the outer side of the metallic film (A) being most apart from the substrate, is a multi-layer film having at least a layer whose major component is zinc oxide and a layer whose major component is tin oxide.

In the drawings:

Figures 1a and 1b are sectional diagrams showing embodiments of Low-E glasses on which low emissivity films are formed, according to the present invention.

Explanation will be given on the oxide film (B) in the first and second inventions, in the followings.

As mentioned above, in case of the conventional Low-E glass (film composition: ZnO/Ag/ZnO/glass), when it is left in a room, white turbidity or white dot appears on the film by the moisture in the air.

When the film with white turbidity or white dot is observed by a scanning electron microscope (SEM), the existence of crack or wrinkle, and exfoliation of the film are recognized on the surface of the film.

When an elementary analysis is performed on the exfoliated part of this film, with respect to Ag and Zn, Ag is found to exist at certain amount irrespective of

This Sheet Has Been Replaced



the existence of the exfoliation. On the contrary, the detected amount of Zn is halved at the exfoliated part. Accordingly, the exfoliation is found to take place on the interface between the uppermost layer of ZnO and the Ag layer.

Next, an investigation is performed on samples before and after a moisture resistance test (the samples are left for 6 days, at 50°C, in an atmosphere of relative humidity of 95%) by X-ray diffraction method. The diffraction angle 2θ (center of gravity position of peak), interplanar spacing d, and the peak width (integral width) I.W. with respect to (002) diffraction line of hexagonal zinc oxide, and (111) diffraction line of cubic Ag, are respectively shown in Table 1.

It is possible to detect degree of strain of the lattice due to an internal stress, by a deviation of peaks in X-ray diffraction method. In case of the sample of ZnO(b)/Ag/ZnO(a)/glass, a peak of ZnO(b) of the uppermost layer, is detected with an intensity 5 to 15 times as much as a peak of ZnO(a). Therefore, a peak of ZnO of X-ray diffraction method with respect to the total of the sample, is almost considered to be the peak of hexagonal ZnO(b) of the uppermost layer, although there may be more or less an influence of ZnO(a).

This Sheet Has Been Replaced

Table 1

	ZnO (002)		Ag (111)	
	Before moisture resistance test	After moisture resistance test	Before moisture resistance test	After moisture resistance test
2θ (deg.)	33.78	33.91	38.09	38.09
d (Å)	2.650	2.641	2.361	2.361
1-w (deg.)	0.510	0.623	0.977	0.675

According to Table 1, (002) diffraction line of ZnO in the Low-E film before the moisture resistance test, is deviated in its position, compared with 2θ = 34.44° of ZnO powder. This suggests the existence of a lattice strain. This lattice strain is due to an internal stress of the film. In the samples before the moisture resistance test, the interplanar space d_{002} = 2.650 Å, which is larger than d_{002} = 2.602 Å of ZnO powder by 1.8%. From this result, the film is found to receive a considerably large compressive stress. In case of samples after the moisture resistance test, the lattice strain is more or less decreased, as d_{002} = 2.641 Å. This test result corresponds with the fact in which the internal stress of ZnO at the uppermost layer is partly

This Sheet Has Been Replaced



relieved by the crack, the wrinkle, and the exfoliation.

Concerning the (111) diffraction line of Ag, the peak width after the moisture resistance test is decreased. Therefore grain growth of Ag is considered to take place by performing the moisture resistance test.

Accordingly, the mechanism of generation of the white turbidity or white dot, is considered as follows. The hexagonal ZnO film at the uppermost layer can not resist to the large internal stress. The film is exfoliated from the interface with Ag film, and is destructed. Next grain size of Ag is increased. The film displays the white turbidity or white dot since light is scattered by the destroyed surface and by the large silver grain. In the examples of Table 1, the internal stress is a compressive stress. However there are two kinds of internal stress, that is, a compressive stress and a tensile stress, both of which cause destruction of a film.

From the above observation, in this invention, it is found that the decrease of the internal stress of ZnO film at the upper most layer, is effective to prevent the white turbidity or white dot due to moisture.

Figures 1a and 1b are sectional diagrams showing embodiments of low emissivity films according to the present invention. Figure 1a is a sectional diagram of the low emissivity film composed of three layers, and Figure 1b is a sectional diagram of the low emissivity

This Sheet Has Been Replaced



film composed of (2n+1) layers. A reference numeral 1 designates a substrate, 2, an oxide film, 3, a metallic film, and 4, an oxide film (B) having low internal stress.

As a substrate 1 in this invention, a film or a plate substrate made of plastic or the like can be used as well as a glass plate.

The oxide film (B) can be used, so long as the internal stress is equal to or less than 1.1×10^{10} dyne/cm^2, and is not particularly restricted. The internal stress of the film depends considerably on the deposition condition of the film. The deposition condition is necessary to be controlled precisely, when a film of low internal stress, is formed. As a method in which a tendency of decreasing internal stress of the film is shown, a method of changing the deposition condition (especially depositing by a sputtering method), such as, increasing the pressure of the atmosphere in deposition of the film (sputtering pressure), or heating the substrate in depositing the film, and a method in which a heat treatment is performed after depositing the film, are suggested. By these methods, the internal stress of the film can be decreased. The respective concrete conditions can be chosen depending upon each apparatus for depositing the film, and are not particularly restricted.

No particular restriction is made on the material of

This Sheet Has Been Replaced



the film of the oxide film (B). The film may be of a single layer, or of a multi-layer. For instance, in case of the laminated glass, there is a case in which an oxide film, such as chromium oxide, having a thickness being equal to or less than 100 Å, is formed as the outermost layer in contact with a plastic intermediate film for lamination with another substrate, for the purpose of controlling the adhesive strength with the plastic intermediate film, or of increasing the durability. The film may be composed of at least two layers including such layer.

No restriction is especially required to a concrete film which composes the oxide film (B). For instance, a film whose major component is ZnO, a film whose major component is SnO_2, a film whose major component is TiO_2, and a multi-layer film which contains at least two of the above layers, are suggested. When the other elements whose ionic radii are smaller than those of Zn^{2+} in oxidized states are added to these films, there is a tendency of decreasing the internal stress of the film, although there may a considerable variation depending on the condition of film deposition.

Especially, concerning ZnO film comprised in the oxide film (B), as mentioned above, the internal stress of the zinc oxide film almost corresponds to the diffraction angle 2θ (center of gravity position) in X-ray diffraction method. The crystal structure of a film

This Sheet Has Been Replaced



whose major component is zinc oxide is hexagonal. To enhance the durability of the Low-E film of this invention, the range of the diffraction angle 2θ (center of gravity position) of (002) diffraction line of the hexagonal zinc oxide in X-ray diffraction method using CuKα radiation of the Low-E film, is desirable to be from 33.88° to 35.00°, particularly, from 34.00° to 34.88°. The value of the diffraction angle 2θ of 34.44° at most, corresponds with a compressive stress, and the value of 34.44° at least, with a tensile stress.

When the other elements whose ionic radii are smaller than those of Zn^{2+} in oxidized states are added (doped) in the ZnO film, there is a tendency of decreasing the internal stress, although depending on the condition of film deposition. A film whose major component is ZnO, doped with at least one selected from the group consisted of Aℓ, Si, B, Ti, Sn, Mg, and Cr can be used in the same way as in ZnO film. Since the effect of decreasing the internal stress remains almost unchanged, when at least one of Aℓ, Si, B, Ti, Sn, Mg, and Cr, are added more than 10% in atomic ratio, of the total amount including Zn, it is sufficient to add these elements by 10% at most. Concerning the ZnO film doped with the other elements, the same reasoning is applicable as in ZnO film, with respect to the deviation of diffraction angle 2θ (center of gravity position) of (002) diffraction line of hexagonal zinc oxide.

This Sheet Has Been Replaced



The film thickness of the oxide film (B), although not especially restricted, is desirable to be within the range of 200 to 700 Å, considering a color tone on the total of the Low-E film, and a visible light transmittance thereof.

When the oxide film (B) is deposited by reactive sputtering in the oxygen-containing atmosphere, it is preferable to first deposit a thin metal layer in non-oxidation atmosphere on the metallic film (A), in order to prevent the oxidation of the metallic film (A). The thin metal layer is oxidized to be an oxide layer during the deposition of the oxide film (B). Therefore the above preferable thickness of the oxide film (B) includes the thickness of the oxide layer formed by the oxidation of said thin metal layer.

As an oxide film (B), a multi-layer film can be used, having a composition of at least two layers by combining films of high internal stress and those of low internal stress. As a film of low internal stress, although depending on the condition of the film deposition, SnO_2 film is suggested because a SnO_2 film of comparatively low internal stress of 7.0×10^9 dyne/cm^2 at most, is relatively easy to deposit. As concrete examples, three layer series such as $ZnO/SnO_2/ZnO$, or $SnO_2/ZnO/SnO_2$, or five layer series such as $ZnO/SnO_2/ZnO/SnO_2/ZnO$, or $SnO_2/ZnO/SnO_2/ZnO/SnO_2$, are suggested in which ZnO films and SnO_2 films are alternatively coated. The internal

This Sheet Has Been Replaced



stress of the total of the oxide film (B) having these multi-layer films, may be 1.1 x 10^{10} dyne/cm^2 at most, and the diffraction angle of ZnO (002) of the X-ray diffraction is not necessary to be the above value. Of course it is desirable that the ZnO film has low internal stress, and diffraction angle of ZnO (002) in X-ray diffraction method is within the above range.

In case of a multi-layer film which is composed of at least two layers by combining films of high internal stress and those of low internal stress, as an oxide film (B), as shown in the above, the number of layers and the film thickness of a layer, may be chosen depending on an apparatus, and is not especially restricted, so long as the total thickness is within the range of 200 to 700Å. Moreover, the film thickness of each layer may be different.

Table 2 shows the relationship among the internal stress of the oxide film (B), the diffraction angle 2θ (center of gravity position) of (002) diffraction line of zinc oxide of a Low-E film in which the oxide film (B) is formed on Ag/ZnO/glass by a sputtering method, and the moisture resistance of the Low-E film.

This Sheet Has Been Replaced



Table 2

	Oxide film (B) 450 Å		Oxide film (B)/Ag/ZnO/glass 450 Å 100 Å 450 Å	
	Material	A value of internal stress (dyne/cm^2)	(002) Diffraction line of ZnO Diffraction angle 2θ (deg.)	Moisture resistance
1	ZnO	1.5×10^{10}	33.78	×
2	ZnO	1.0×10^{10}	33.89	△
3	ZnO	6.3×10^{9}	34.10	○
4	ZnO	1.0×10^{9}	34.42	○
5	Aℓ-doped ZnO	6.2×10^{9}	34.10	○
6	B-doped ZnO	9.5×10^{9}	33.89	○
7	Si-doped ZnO	7.8×10^{9}	33.99	○
8	Ti-doped ZnO	4.6×10^{9}	34.21	○
9	Cr-doped ZnO	6.1×10^{9}	34.12	○
10	Mg-doped ZnO	7.9×10^{9}	33.99	○
11	Sn-doped ZnO	5.7×10^{9}	34.18	○
12	ZnO/SnO_2/ZnO /SnO_2/ZnO	9.2×10^{9}	----	○

This Sheet Has Been Replaced



The internal stress in Table 2 is in compressive stress. The moisture resistance is evaluated by performing a test in which samples are left in an atmosphere of the relative humidity of 95% at 50°C, for 6 days. In this evaluation standard, ○ is for a sample having no white turbidity at adjacent to the edge of the film, and no white spot with a diameter of at least 1 mm, △ for a sample having no turbidity at adjacent to the edge of the film, and white spot with a diameter of 1 to 2 mm, and × for a sample having white turbidity at adjacent to the edge of the film, and white spot with a diameter at least 2 mm. The doping quantities of Aℓ, Si, B, Ti, Sn, Mg, and Cr for all the samples are 4% in atomic ratio, of the total amount including Zn. In sample 2, the pressure of the atmosphere in film deposition, is increased compared with sample 1. In sample 3, the temperature of the substrate in film forming is elevated compared with sample 1. Sample 4 is heated after film deposition. It is found from Table 2, that the moisture resistance of the Low-E film, does not depend on the material of the film, or number of layers; a single layer or multi-layer, and depends on the internal stress and the diffraction angle 2θ (center of gravity position) of (002) diffraction line of ZnO.

Next, explanation will be given to an oxide film (B) in the third invention of this application. By using a multi-layer film as the oxide film (B) composed of, at

This Sheet Has Been Replaced



least one layer of film whose major component is zinc oxide, and one layer of film whose major component is tin oxide, a Low-E film excellent in acid resistance is realized. The tin oxide is excellent in acid resistance, and the optical property such as refractive index is almost the same with that of zinc oxide. Therefore, by replacing a portion of the zinc oxide film, with tin oxide, an oxide film (B) excellent in acid resistance can be composed, while maintaining the optical property. On the other hand, when these films are deposited by a sputtering method, especially by a direct current sputtering method, a zinc oxide film can be deposited by a higher rate than in tin oxide. Therefore, the film composition and film thickness of the oxide film (B) had better be determined considering the acid resistance and the film forming rate.

The film thickness of the oxide film (B), although not especially restricted, is desirable to be in the range of 200 to 700 Å, considering the color tone of the total of the Low-E film, and the visible light transmittance thereof. The number of layers and the film thickness of a single layer may be chosen according to an apparatus, and are not especially restricted. Furthermore, the thickness of each layer may be different.

Zinc oxide can resist to the influence of acid from the edge of the film, when the zinc oxide layer is

This Sheet Has Been Replaced



divided to a plurality zinc oxide films, and the film thickness of the single layer of zinc oxide is made thinner. Accordingly, the concrete film composition of oxide film (B), had better be composed as in three layer series such as $ZnO/SnO_2/ZnO$, or $SnO_2/ZnO/SnO_2$, or five layer series such as $ZnO/SnO_2/ZnO/SnO_2/ZnO$, or $SnO_2/ZnO/SnO_2/ZnO/SnO_2$, and the film thickness of a single layer of zinc oxide had better be 200 Å at most, favorably 180 Å at most. More favorably, the film thickness is particularly desirable to be 100 Å at most, and the film is composed by the five layer series. Considering the productivity of film depositing, a multi-layer composed of the five layer series is favorable, in which the film thickness of the each layer is unified to about 90 Å, and total thickness of the film is about 450 Å.

Such oxide film layer (B) is further favorable, when the internal stress is 1.1×10^{10} dyne/cm^2 at most. When the internal stress of zinc oxide is low, the film is difficult to be peeled off by the influence of acid from the edge of the film. Therefore, the low internal stress of zinc oxide is favorable also in view of the acid resistance and the moisture resistance. It is more preferable when the diffraction angle 2θ (center of gravity position) of (002) diffraction line of zinc oxide by X-ray diffraction method, is within the range of 33.88° to 35.00°, particularly, from 34.00° to 34.88°.

This Sheet Has Been Replaced

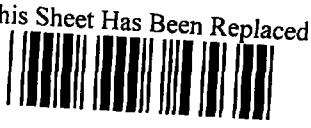

The material of the oxide film 2 other than oxide film (B) is not especially restricted. As the oxide film 2, a film of ZnO, SnO_2, TiO_2, and a multi-layer film containing at least 2 kinds of these, and a film further added with the other elements, can be utilized. Furthermore, considering the productivity, a film in which at least two layers of ZnO, SnO_2, and $ZnO-SnO_2$ are alternatively laminated, and a film in which at least one of Aℓ, Si, B, Ti, Sn, Mg, and Cr, are added by 10 atomic % at most of the total quantity including Zn, are favorable.

Considering the color tone and the visible light transmittance thereof, the thickness of the oxide film 2 is desirable to be in the range of 200 to 700 Å. In case of a multi-layer film, the total thickness may be in the range of 200 to 700 Å, and the film thickness of each layer is not restricted.

As the metallic film 3 in the present invention, a metal layer with high heat reflective function, whose major component is Ag, or Ag added with at least one of Au, Cu, and Pd, can be utilized. The metallic film 3 may also be comprising a metal layer with various other function, other than the heat reflective metal layer (i.e. Ag layer), for example, a metal layer for controlling the adhesive strength between the heat reflective metal layer and the oxide film 2 and/or the oxide film (B), or a metal layer with a barrier function

This Sheet Has Been Replaced



for preventing the diffusion of the metal from the heat reflective metal layer. Considering the balance between high heat reflective function and high visible light transmittance, the film thickness of the metallic film 3 is desirable to be in the range of 50 to 150 Å, especially about 100 Å.

Especially in case of a Low-E film of five layers such as an oxide film, a metallic film, an oxide film, a metallic film, an oxide film alternately formed, or a Low-E film of more than five layers, it is desirable to use an oxide film having an internal stress of 1.1×10^{10} dyne/cm^2 at most, as an oxide film 2 (an oxide film other than the oxide film (B).)

Compared with a conventional Low-E film, the moisture resistance of the Low-E film of the present invention is considerably improved in the moisture resistance, by using a film of low internal stress of 1.1×10^{10} dyne/cm^2 at most, as an oxide film (B). This is due to the fact that the oxide film is difficult to be destroyed by the low internal stress of the oxide film, and the deterioration by moisture is prevented. Furthermore, the acid resistance is improved, by introducing a film whose major component is tin oxide in the oxide layer (B).

EXAMPLES

EXAMPLE 1

An Aℓ doped ZnO film with a thickness of 450 Å, is deposited on a glass substrate, by a direct current

This Sheet Has Been Replaced



sputtering method, in an atmosphere of Argon and oxygen, of $Ar:O_2$ = 2:8, with pressure of 6.5×10^{-3} Torr, using a target made of metal of Aℓ and Zn, the composition of Aℓ being 3.0 atomic % of the total quantity including Zn. Next, an Ag film with a thickness of 100 Å is deposited in an atmosphere of only Ar with pressure of 6.5×10^{-3} Torr, using Ag as a target. Next, an Aℓ doped Zn film having a very thin thickness of about 20 Å, is deposited, without changing the atmosphere, using a target made of a metal of Aℓ and Zn, the Aℓ composition being 3.0 atomic % of the total quantity including Zn. Lastly, an Aℓ doped ZnO film is deposited in an atmosphere of Argon and oxygen of $Ar:O_2$ = 2:8, with pressure of 6.5×10^{-3} Torr, using a target made of metal of Aℓ and Zn, the composition of the Aℓ being 3.0 atomic % of the total quantity including Zn. During the deposition of the Aℓ doped ZnO film, the Aℓ doped Zn film is oxidized in the oxygen containing atmosphere to be Aℓ doped ZnO film. Therefore the total thickness of Aℓ doped ZnO film deposited on the Ag film is 450 Å. The substrate temperature in depositing film is room temperature. The dc power density in depositing Aℓ doped ZnO film, is 2.7 W/cm^2, and 0.7 W/cm^2, in depositing Ag film.

When the obtained Low-E film is checked by X-ray diffraction method, the diffraction angle 2θ (center of gravity position) of (002) diffraction line of ZnO, is found to be 34.12°. The internal stress of the Aℓ doped

This Sheet Has Been Replaced



ZnO film (450 Å) formed under the same condition, is 6.5 x 10^9 dyne/cm^2.

The moisture resistance test is performed on the Low-E film, in which samples are left in an atmosphere of relative humidity 95% at 50°C, for 6 days. The appearance of the samples after the moisture resistance test, is favorable, in which although very small spots are observed, conspicuous white dots and white turbidity are not observed. According to a SEM photograph of the surface of the film after the moisture resistance test, almost no cracks, nor wrinkles, nor exfoliations are observed on the surface of the film.

A glass on which the above Low-E film is deposited, is laminated with another glass plate with a plastic intermediate film therebetween, disposing the Low-E film inside. The same moisture test is carried out also for the laminated glass. As the result, no white turbidity nor white spot is observed on the film even after 14 days of the moisture resistance test.

EXAMPLE 2

A Low-E film is deposited, using an RF sputtering method, by successively coating ZnO film, Ag film, and Aℓ doped ZnO film, having the film thicknesses of 450 Å, 100 Å, and 450 Å, respectively, on a glass substrate. As a material of target, ZnO, Ag, and ZnO added with $Aℓ_2O_3$ (98 weight % ZnO, 2 weight % $Aℓ_2O_3$), respectively, is used and a sputtering is performed in argon gas. The

This Sheet Has Been Replaced



sputtering pressure is 1.8×10^{-3} Torr, the substrate temperature is room temperature, and the RF power density is 3 W/cm^2.

When the obtained Low-E film is checked by X-ray diffraction method, the diffraction angle 2θ (center of gravity position) of (002) diffraction line of ZnO, is found to be 34.00°. The internal stress of Aℓ doped ZnO film deposited under the same condition, is 6.2×10^9 dyne/cm^2.

The same moisture resistance test as in Example 1 is carried out on the above film. The moisture resistance of the film is fair, in which although very small spots are observed on the film after the test, no conspicuous white turbidity nor white spot is observed.

EXAMPLE 3

A Low-E film is produced, which has a film composition of ZnO/SnO_2/ZnO/SnO_2/ZnO/Ag/ZnO/glass, by the same method as in Example 2. The film thickness of Ag is 100 Å, that of ZnO between Ag and glass, 450 Å, and those of ZnO layer and SnO_2 layer on top of Ag layer, 90 Å. ZnO layer and Ag layer are obtained by sputtering ZnO and Ag targets in Ar gas, and SnO_2 layer is obtained by sputtering SnO_2 target in an atmosphere of a mixed gas of Ar and O_2. The sputtering pressure, the substrate temperature, and the RF power in film deposition of ZnO and Ag are the same in the above Example 2. The power density is 1 W/cm^2 in film deposition of SnO_2, gas flow

This Sheet Has Been Replaced

rate ratio of $A\ell:O_2$ is 8:2.

The internal stress of film of $ZnO/SnO_2/ZnO/SnO_2/ZnO$, formed under the same condition as above, is 9.2×10^9 dyne/cm^2.

The moisture resistance of the Low-E film obtained, is as favorable as in the above Example.

EXAMPLE 4

A Low-E film is produced, of which film composition is $ZnO/SnO_2/ZnO/SnO_2/ZnO/Ag/ZnO/SnO_2/ZnO/SnO_2/ZnO$/glass, by the same method as in Example 3. The thickness of Ag layer is 100 Å, those of ZnO layer and SnO_2 layer are 90 Å for each layer. The target, and the sputtering gas, the sputtering pressure, the substrate temperature, and RF power density, are the same as in Example 3.

The internal stress of the film of $ZnO/SnO_2/ZnO/SnO_2/ZnO$ produced under this condition, is 9.2×10^9 dyne/cm^2.

The moisture resistance of the obtained Low-E film, is as favorable as in the above Example.

EXAMPLE 5

A ZnO film, an Ag film and ZnO film, having a film thicknesses of 450 Å, 100 Å, and 450 Å, respectively, are successively formed on a glass substrate, by the same method as in Example 2. As materials of targets, ZnO and Ag are used, and sputterings are performed in argon gas atmosphere. The sputtering pressure, the substrate temperature, the power density are the same as in Example

This Sheet Has Been Replaced



2. A heat treatment is performed on the film after the film deposition, in which samples are heated at 400°C in N_2 atmosphere, for 1 hour.

When the Low-E film after the heat treatment, is checked by X-ray diffraction method, the diffraction angle 2θ (center of gravity position) of (002) diffraction line of ZnO, is found to be 34.42°.

The moisture resistance of the Low-E film is as favorable as in the above Example.

COMPARATIVE EXAMPLE 1

A ZnO film, an Ag film, a ZnO film, with film thicknesses of 450 Å, 100Å, and 450 Å, respectively, are successively coated on a glass substrate, by the same method as in the above Example 2. As for materials of targets, ZnO and Ag are used, and sputtering is performed in argon gas atmosphere. The sputtering pressure, the substrate temperature, and the RF power density are the same as in Example 2.

When the obtained Low-E film is checked by X-ray diffraction method, the diffraction angle 2θ (center of gravity position) of (002) diffraction line of ZnO is found to be 33.78°. The internal stress of ZnO film formed under this condition, is 1.5×10^{10} dyne/cm^2.

The Low-E film after the moisture resistance test, have a thin turbidity on the whole area of the surface of samples, and recognizable white spots with diameter of at least 1 mm are clearly observed.

This Sheet Has Been Replaced



According to the same SEM photograph after the moisture resistance test, cracks prevail on the whole area of the surface of the film, which shows considerable destruction of the film.

A glass on which the above Low-E film is deposited, is laminated with another glass plate with a plastic intermediate film therebetween, disposing the Low-E film inside. The same moisture test is carried out also for this laminated glass. As a result, clear white turbidity is observed on the edge of the film after 14 days of the moisture resistance test.

EXAMPLE 6

A Low-E film having the composition of $ZnO/SnO_2/ZnO/SnO_2/ZnO/Ag/ZnO/SnO_2/ZnO/SnO_2/ZnO$/glass, is made by using metal targets made of zinc, tin, and silver, respectively, in which the Ag film is made by a direct current sputtering method, in argon atmosphere, and the SnO_2 film and the ZnO film are made by a reactive direct current sputtering method in an atmosphere containing oxygen. The thickness of Ag film is 100 Å and those of ZnO film and SnO_2 film are 90 Å for each layer, respectively. The visible light transmittance of the glass having such Low-E film is 86%, and its emissivity is 0.06.

An acid resistance test was performed on the glass with Low-E film, in which the glass is immersed in 1 N hydrochloric acid. No change is observed until 2 minutes

This Sheet Has Been Replaced



after the immersion. However, after 3 minutes the color of the sample begins to change into brownish color from edge of the film. After 5 minutes a part of the film is observed to be exfoliated.

COMPARATIVE EXAMPLE 2

A Low-E film having the film composition of ZnO/Ag/ZnO/glass is made, by using metal targets made of zinc and silver, respectively, in which the Ag film is made by a direct current sputtering method, in argon atmosphere, and the ZnO film is made by a reactive direct current sputtering method, in a atmosphere containing oxygen. The thickness of the Ag film is 100 Å, and the thickness of the ZnO film is 450 Å. The visible light transmittance of the glass having the Low-E film, is 86%, and its emissivity is 0.06.

An acid resistance test was performed on the glass with Low-E film, in which the glass is immersed in 1 N hydrochloric acid. The film begins to be exfoliated just after the immersion, and after 5 minutes, the Low-E film is totally exfoliated from the glass, and vanished.

In the Low-E film of this invention, the moisture resistance and the acid resistance are significantly improved. Accordingly, the handling of the glass with such Low-E film on single plate, is likely to become easy. Furthermore, the possibility of the preservation of such glass in single plate for a long time in a room, is realized. Furthermore the reliability of the Low-E

This Sheet Has Been Replaced



glass for an automobile or for a building, is promoted. When the film is used in a laminated glass, the glass is not deteriorated by the moisture contained in an intermediate film, which improves the durability of the laminated glass for an automobile or for a building.

The Low-E film of this invention is electrically conductive, for it is comprising the metal layer. Therefore the Low-E film of the present invention can be used in various technical fields, for example, as an electrode in electronics field, or as a heating element for electrically heated window, or as an electromagnetic shielding film for a window or for electronics use. In some cases, the Low-E film of the present invention can be applied on a substrate with various functioning layers therebetween, in which case the optical property of this Low-E film can be adjusted depending on each purpose by choosing suitable film thickness for each layer comprised in the Low-E film of the present invention.

This Sheet Has Been Replaced



CLAIMS:

1. A low emissivity film which comprises:

a substrate; and

a coating of oxide and metallic films alternately formed on the substrate in a total of (2n+1) layers where n is an integer being equal to or more than 1, with an innermost layer thereof being an oxide film,

wherein the oxide film (B) formed on the outer side of the metallic film (A) being most apart from the substrate, is a single layer film or a multi-layer film having at least a film whose major component is hexagonal zinc oxide; and

a value of a diffraction angle 2θ (center of gravity position) of (002) diffraction line of the hexagonal zinc oxide of the low emissivity film in X-ray diffraction method using Cu$K\alpha$ radiation is not smaller than 33.88° and not larger than 35.00°.

2. The low emissivity film according to Claim 1, wherein the value of the diffraction angle 2θ (center of gravity position) of (002) diffraction line of the hexagonal zinc oxide in x-ray diffraction method using Cu$K\alpha$ radiation is not smaller than 34.00° and not larger than 34.88°.

3. The low emissivity film according to Claim 1, wherein the metallic film (A) is a metallic film whose major component is Ag.

4. The low emissivity film according to Claim 1, wherein the outermost layer of said oxide film (B) is a layer for controlling the adhesive strength thereof with a plastic intermediate film for lamination with another substrate.

This Sheet Has Been Replaced

ABSTRACT

A low emissivity film which comprises:

a substrate; and

a coating of oxide and metallic films alternately formed on the substrate in a total of (2n+1) layers where n is an integer being equal to or more than 1, with an innermost layer thereof being an oxide film,

wherein the oxide film (B) formed on the outer side of the metallic film (A) being most apart from the substrate, is a single layer film or a multi-layer film having at least a film whose major component is hexagonal zinc oxide; and

a value of a diffraction angle 2θ (center of gravity position) of (002) diffraction line of the hexagonal zinc oxide of the low emissivity film in X-ray diffraction method using CuKα radiation, is not smaller than 33.88° and not larger than 35.00°.

This Sheet Has Been Replaced



FIGURE 1

(a)

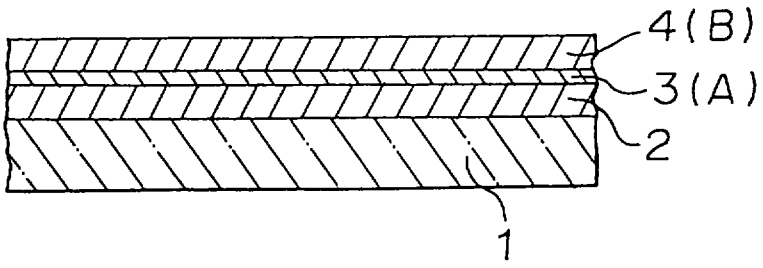

(b)

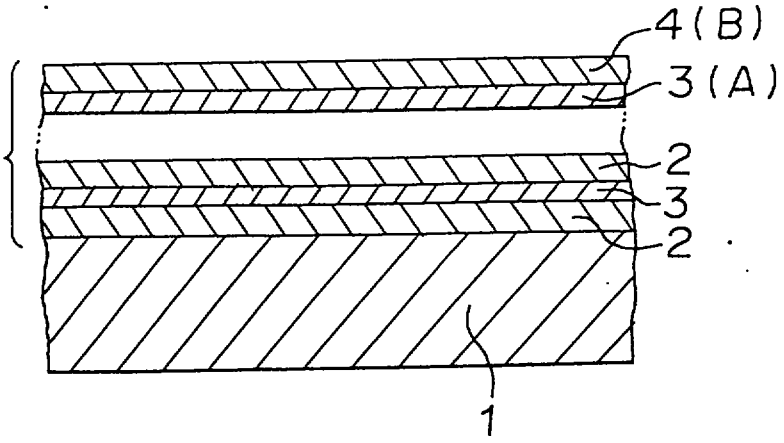

This Sheet Has Been Replaced

REPLACED SHEETS SG
☑ Description : paged ...1... to paged ...26...
☑ Claim(s) : paged ...27... to paged ...—...
☑ Drawing(s) : paged ...1... to paged ...—...
☑ Abstract : paged ...28... to paged ...—...

REPLACEMENT SHEETS SG
☑ Description : paged 1 to paged 26
☑ Claim(s) : paged 27 to paged —
☑ Drawing(s) : paged 1 to paged —
☑ Abstract : paged 28 to paged —
DATE OF RECEIPT 19-10-1996

A LOW EMISSIVITY FILM

This invention relates to a low emissivity film which is excellent in durability, especially in moisture resistance or in acid resistance.

A film composed of (2n+1) layers ($n \geq 1$) such as a film composed of three layers in which an oxide film, an Ag film, and an oxide film are successively coated on a surface of a substrate, or a film composed of five layers in which an oxide film, an Ag film, an oxide film, an Ag film, and an oxide film are successively coated on a surface of a substrate, is a heat reflective film called Low-E (Low-Emissivity) film. A glass in which such a Low-E film is formed, is called a Low-E glass. This glass can prevent lowering of room temperature by reflecting the thermal infrared radiation emitted from within the heated room, which is used mainly in cold district on the purpose of decreasing heating load. Furthermore, since this glass has a heat insulating effect of the solar radiation energy, it is adopted in a windshield of an automobile. Since this glass is

This is the replacement sheet
Date 19 OCT 1996
This Sheet Has Been Replaced

This Sheet Has Been Replaced

transparent and is electrically conductive, it has a usage as an electromagnetic shielding glass. When this glass is equipped with an electric heating such as a bus bar composed of an electrically conductive printing or the like, this glass can be used as an electrically heated window.

As a major Low-E glass, a glass is exemplified having a film composition of ZnO/Ag/ZnO/glass. However, since this film is devoid of durability such as anti-scratching property or chemical stability, it can not be used on a single plate, and it is necessary to use the film in a laminated glass or in double glazing. This film has a problem especially in moisture resistance, in which white dot or white turbidity is caused by moisture in the air or by moisture contained in an intermediate film in case of the laminated glass. Furthermore, since ZnO is insufficient in acid resistance, the film may be deteriorated by acid substance in the air. Due to these shortcomings, caution is required in the storage or in the handling of the single plate.

It is an object of the present invention to provide a Low-E film capable of overcoming the above shortcomings, and excellent in the durability, especially in the moisture resistance or in the acid resistance.

According to an aspect of the present invention, there is provided a low emissivity film which comprises:

a substrate; and

This is the replacement sheet
19 OCT 1996
Date:

This Sheet Has Been Replaced

a coating of oxide and metallic films alternately formed on the substrate in a total of (2n+1) layers where n is an integer being equal to or more than 1, with the innermost layer being an oxide film,

wherein the oxide film (B) formed on the outer side of the metallic film (A) being most apart from the substrate, has an internal stress which is equal to, or less than 1.1×10^{10} dyne/cm^2.

According to another aspect of the present invention, there is provided a low emissivity film which comprises:

a substrate; and

a coating of oxide and metallic films alternately formed on the substrate in a total of (2n+1) layers where n is an integer being equal to or more than 1, with the innermost layer being an oxide film,

wherein the oxide film (B) formed on the outer side of the metallic film (A) being mostly apart from the substrate, is a single layer film or a multi-layer film having at least a film whose major component is hexagonal zinc oxide; and

a value of a diffraction angle 2θ (center of gravity position) of (002) diffraction line of the hexagonal zinc oxide of the low emissivity film in X-ray diffraction method using CuKα radiation is not smaller than 33.88° and not larger than 35.00°.

According to another aspect of the present invention, there is provided a low emissivity film which comprises:

This is the replacement sheet
19 OCT 1996
Date:

This Sheet Has Been Replaced

a substrate; and

a coating of oxide and metallic films alternately formed on the substrate in a total of (2n+1) layers where n is an integer being equal to or more than 1, with the innermost layer being an oxide film,

wherein the oxide film (B) formed on the outer side of the metallic film (A) being most apart from the substrate, is a multi-layer film having at least a layer whose major component is zinc oxide and a layer whose major component is tin oxide.

In the drawings:

Figures 1a and 1b are sectional diagrams showing embodiments of Low-E glasses on which low emissivity films are formed, according to the present invention.

Explanation will be given on the oxide film (B) in the first and second inventions, in the followings.

As mentioned above, in case of the conventional Low-E glass (film composition: ZnO/Ag/ZnO/glass), when it is left in a room, white turbidity or white dot appears on the film by the moisture in the air.

When the film with white turbidity or white dot is observed by a scanning electron microscope (SEM), the existence of crack or wrinkle, and exfoliation of the film are recognized on the surface of the film.

When an elementary analysis is performed on the exfoliated part of this film, with respect to Ag and Zn, Ag is found to exist at certain amount irrespective of

This is the replacement sheet

Date: 19 OCT 1996

the existence of the exfoliation. On the contrary, the detected amount of Zn is halved at the exfoliated part. Accordingly, the exfoliation is found to take place on the interface between the uppermost layer of ZnO and the Ag layer.

Next, an investigation is performed on samples before and after a moisture resistance test (the samples are left for 6 days, at 50°C, in an atmosphere of relative humidity of 95%) by X-ray diffraction method. The diffraction angle 2θ (center of gravity position of peak), interplanar spacing d, and the peak width (integral width) I.W. with respect to (002) diffraction line of hexagonal zinc oxide, and (111) diffraction line of cubic Ag, are respectively shown in Table 1.

It is possible to detect degree of strain of the lattice due to an internal stress, by a deviation of peaks in X-ray diffraction method. In case of the sample of ZnO(b)/Ag/ZnO(a)/glass, a peak of ZnO(b) of the uppermost layer, is detected with an intensity 5 to 15 times as much as a peak of ZnO(a). Therefore, a peak of ZnO of X-ray diffraction method with respect to the total of the sample, is almost considered to be the peak of hexagonal ZnO(b) of the uppermost layer, although there may be more or less an influence of ZnO(a).

This Sheet Has Been Replaced



This is the replacement sheet

Date: 19 OCT 1996

This Sheet Has Been Replaced

Table 1

	ZnO (002)		Ag (111)	
	Before moisture resistance test	After moisture resistance test	Before moisture resistance test	After moisture resistance test
2θ (deg.)	33.78	33.91	38.09	38.09
d (Å)	2.650	2.641	2.361	2.361
l·w (deg.)	0.510	0.623	0.977	0.675

According to Table 1, (002) diffraction line of ZnO in the Low-E film before the moisture resistance test, is deviated in its position, compared with 2θ = 34.44° of ZnO powder. This suggests the existence of a lattice strain. This lattice strain is due to an internal stress of the film. In the samples before the moisture resistance test, the interplanar space d_{002} = 2.650 Å, which is larger than d_{002} = 2.602 Å of ZnO powder by 1.8%. From this result, the film is found to receive a considerably large compressive stress. In case of samples after the moisture resistance test, the lattice strain is more or less decreased, as d_{002} = 2.641 Å. This test result corresponds with the fact in which the internal stress of ZnO at the uppermost layer is partly

This is the replacement sheet

Date: 19 OCT 1996

This Sheet Has Been Replaced

relieved by the crack, the wrinkle, and the exfoliation.

Concerning the (111) diffraction line of Ag, the peak width after the moisture resistance test is decreased. Therefore grain growth of Ag is considered to take place by performing the moisture resistance test.

Accordingly, the mechanism of generation of the white turbidity or white dot, is considered as follows. The hexagonal ZnO film at the uppermost layer can not resist to the large internal stress. The film is exfoliated from the interface with Ag film, and is destructed. Next grain size of Ag is increased. The film displays the white turbidity or white dot since light is scattered by the destroyed surface and by the large silver grain. In the examples of Table 1, the internal stress is a compressive stress. However there are two kinds of internal stress, that is, a compressive stress and a tensile stress, both of which cause destruction of a film.

From the above observation, in this invention, it is found that the decrease of the internal stress of ZnO film at the upper most layer, is effective to prevent the white turbidity or white dot due to moisture.

Figures 1a and 1b are sectional diagrams showing embodiments of low emissivity films according to the present invention. Figure 1a is a sectional diagram of the low emissivity film composed of three layers, and Figure 1b is a sectional diagram of the low emissivity

This is the replacement sheet

19 OCT 1996

Date:

This Sheet Has Been Replaced

film composed of (2n+1) layers. A reference numeral 1 designates a substrate, 2, an oxide film, 3, a metallic film, and 4, an oxide film (B) having low internal stress.

As a substrate 1 in this invention, a film or a plate substrate made of plastic or the like can be used as well as a glass plate.

The oxide film (B) can be used, so long as the internal stress is equal to or less than 1.1×10^{10} dyne/cm^2, and is not particularly restricted. The internal stress of the film depends considerably on the deposition condition of the film. The deposition condition is necessary to be controlled precisely, when a film of low internal stress, is formed. As a method in which a tendency of decreasing internal stress of the film is shown, a method of changing the deposition condition (especially depositing by a sputtering method), such as, increasing the pressure of the atmosphere in deposition of the film (sputtering pressure), or heating the substrate in depositing the film, and a method in which a heat treatment is performed after depositing the film, are suggested. By these methods, the internal stress of the film can be decreased. The respective concrete conditions can be chosen depending upon each apparatus for depositing the film, and are not particularly restricted.

No particular restriction is made on the material of

This is the replacement sheet

Date: 19 OCT 1996

This Sheet Has Been Replaced

the film of the oxide film (B) The film may be of a single layer, or of a multi-layer. For instance, in case of the laminated glass, there is a case in which an oxide film, such as chromium oxide, having a thickness being equal to or less than 100 Å, is formed as the outermost layer in contact with a plastic intermediate film for lamination with another substrate, for the purpose of controlling the adhesive strength with the plastic intermediate film, or of increasing the durability. The film may be composed of at least two layers including such layer.

No restriction is especially required to a concrete film which composes the oxide film (B). For instance, a film whose major component is ZnO, a film whose major component is SnO_2, a film whose major component is TiO_2, and a multi-layer film which contains at least two of the above layers, are suggested. When the other elements whose ionic radii are smaller than those of Zn^{2+} in oxidized states are added to these films, there is a tendency of decreasing the internal stress of the film, although there may a considerable variation depending on the condition of film deposition.

Especially, concerning ZnO film comprised in the oxide film (B), as mentioned above, the internal stress of the zinc oxide film almost corresponds to the diffraction angle 2θ (center of gravity position) in X-ray diffraction method. The crystal structure of a film

This is the replacement sheet
19 OCT 1996
Date:

This Sheet Has Been Replaced

whose major component is zinc oxide is hexagonal. To enhance the durability of the Low-E film of this invention, the range of the diffraction angle 2θ (center of gravity position) of (002) diffraction line of the hexagonal zinc oxide in X-ray diffraction method using CuKα radiation of the Low-E film, is desirable to be from 33.88° to 35.00°, particularly, from 34.00° to 34.88°. The value of the diffraction angle 2θ of 34.44° at most, corresponds with a compressive stress, and the value of 34.44° at least, with a tensile stress.

When the other elements whose ionic radii are smaller than those of Zn^{2+} in oxidized states are added (doped) in the ZnO film, there is a tendency of decreasing the internal stress, although depending on the condition of film deposition. A film whose major component is ZnO, doped with at least one selected from the group consisted of Aℓ, Si, B, Ti, Sn, Mg, and Cr can be used in the same way as in ZnO film. Since the effect of decreasing the internal stress remains almost unchanged, when at least one of Aℓ, Si, B, Ti, Sn, Mg, and Cr, are added more than 10% in atomic ratio, of the total amount including Zn, it is sufficient to add these elements by 10% at most. Concerning the ZnO film doped with the other elements, the same reasoning is applicable as in ZnO film, with respect to the deviation of diffraction angle 2θ (center of gravity position) of (002) diffraction line of hexagonal zinc oxide.

This is the replacement sheet

Date: 19 OCT 1996

This Sheet Has Been Replaced

The film thickness of the oxide film (B), although not especially restricted, is desirable to be within the range of 200 to 700 Å, considering a color tone on the total of the Low-E film, and a visible light transmittance thereof.

When the oxide film (B) is deposited by reactive sputtering in the oxygen-containing atmosphere, it is preferable to first deposit a thin metal layer in non-oxidation atmosphere on the metallic film (A), in order to prevent the oxidation of the metallic film (A). The thin metal layer is oxidized to be an oxide layer during the deposition of the oxide film (B). Therefore the above preferable thickness of the oxide film (B) includes the thickness of the oxide layer formed by the oxidation of said thin metal layer.

As an oxide film (B), a multi-layer film can be used, having a composition of at least two layers by combining films of high internal stress and those of low internal stress. As a film of low internal stress, although depending on the condition of the film deposition, SnO_2 film is suggested because a SnO_2 film of comparatively low internal stress of 7.0×10^9 dyne/cm^2 at most, is relatively easy to deposit. As concrete examples, three layer series such as $ZnO/SnO_2/ZnO$, or $SnO_2/ZnO/SnO_2$, or five layer series such as $ZnO/SnO_2/ZnO/SnO_2/ZnO$, or $SnO_2/ZnO/SnO_2/ZnO/SnO_2$, are suggested in which ZnO films and SnO_2 films are alternatively coated. The internal

This is the replacement sheet

19 OCT 1996

Date:

This Sheet Has Been Replaced

stress of the total of the oxide film (B) having these multi-layer films, may be 1.1×10^{10} dyne/cm^2 at most, and the diffraction angle of ZnO (002) of the X-ray diffraction is not necessary to be the above value. Of course it is desirable that the ZnO film has low internal stress, and diffraction angle of ZnO (002) in X-ray diffraction method is within the above range.

In case of a multi-layer film which is composed of at least two layers by combining films of high internal stress and those of low internal stress, as an oxide film (B), as shown in the above, the number of layers and the film thickness of a layer, may be chosen depending on an apparatus, and is not especially restricted, so long as the total thickness is within the range of 200 to 700Å. Moreover, the film thickness of each layer may be different.

Table 2 shows the relationship among the internal stress of the oxide film (B), the diffraction angle 2θ (center of gravity position) of (002) diffraction line of zinc oxide of a Low-E film in which the oxide film (B) is formed on Ag/ZnO/glass by a sputtering method, and the moisture resistance of the Low-E film.

This is the replacement sheet

Date: 19 OCT 1996

Table 2

	Oxide film (B) 450 Å		Oxide film (B)/Ag/ZnO/glass 450 Å 100 Å 450 Å	
	Material	A value of internal stress (dyne/cm^2)	(002) Diffraction line of ZnO Diffraction angle 2θ (deg.)	Moisture resistance
1	ZnO	1.5×10^{10}	33.78	×
2	ZnO	1.0×10^{10}	33.89	△
3	ZnO	6.3×10^{9}	34.10	○
4	ZnO	1.0×10^{9}	34.42	○
5	Aℓ-doped ZnO	6.2×10^{9}	34.10	○
6	B-doped ZnO	9.5×10^{9}	33.89	○
7	Si-doped ZnO	7.8×10^{9}	33.99	○
8	Ti-doped ZnO	4.6×10^{9}	34.21	○
9	Cr-doped ZnO	6.1×10^{9}	34.12	○
10	Mg-doped ZnO	7.9×10^{9}	33.99	○
11	Sn-doped ZnO	5.7×10^{9}	34.18	○
12	ZnO/SnO_2/ZnO /SnO_2/ZnO	9.2×10^{9}	----	○

This Sheet Has Been Replaced

This is the replacement sheet

Date: 19 OCT 1996

This Sheet Has Been Replaced

The internal stress in Table 2 is in compressive stress. The moisture resistance is evaluated by performing a test in which samples are left in an atmosphere of the relative humidity of 95% at 50°C, for 6 days. In this evaluation standard, ○ is for a sample having no white turbidity at adjacent to the edge of the film, and no white spot with a diameter of at least 1 mm, △ for a sample having no turbidity at adjacent to the edge of the film, and white spot with a diameter of 1 to 2 mm, and × for a sample having white turbidity at adjacent to the edge of the film, and white spot with a diameter at least 2 mm. The doping quantities of Aℓ, Si, B, Ti, Sn, Mg, and Cr for all the samples are 4% in atomic ratio, of the total amount including Zn. In sample 2, the pressure of the atmosphere in film deposition, is increased compared with sample 1. In sample 3, the temperature of the substrate in film forming is elevated compared with sample 1. Sample 4 is heated after film deposition. It is found from Table 2, that the moisture resistance of the Low-E film, does not depend on the material of the film, or number of layers; a single layer or multi-layer, and depends on the internal stress and the diffraction angle 2θ (center of gravity position) of (002) diffraction line of ZnO.

Next, explanation will be given to an oxide film (B) in the third invention of this application. By using a multi-layer film as the oxide film (B) composed of, at

This is the replacement sheet

19 OCT 1996

Date:

This Sheet Has Been Replaced

least one layer of film whose major component is zinc oxide, and one layer of film whose major component is tin oxide, a Low-E film excellent in acid resistance is realized. The tin oxide is excellent in acid resistance, and the optical property such as refractive index is almost the same with that of zinc oxide. Therefore, by replacing a portion of the zinc oxide film, with tin oxide, an oxide film (B) excellent in acid resistance can be composed, while maintaining the optical property. On the other hand, when these films are deposited by a sputtering method, especially by a direct current sputtering method, a zinc oxide film can be deposited by a higher rate than in tin oxide. Therefore, the film composition and film thickness of the oxide film (B) had better be determined considering the acid resistance and the film forming rate.

The film thickness of the oxide film (B), although not especially restricted, is desirable to be in the range of 200 to 700 Å, considering the color tone of the total of the Low-E film, and the visible light transmittance thereof. The number of layers and the film thickness of a single layer may be chosen according to an apparatus, and are not especially restricted. Furthermore, the thickness of each layer may be different.

Zinc oxide can resist to the influence of acid from the edge of the film, when the zinc oxide layer is

This is the replacement sheet

Date: 19 OCT 1996

This Sheet Has Been Replaced

divided to a plurality zinc oxide films, and the film thickness of the single layer of zinc oxide is made thinner. Accordingly, the concrete film composition of oxide film (B), had better be composed as in three layer series such as ZnO/SnO_2/ZnO, or SnO_2/ZnO/SnO_2, or five layer series such as ZnO/SnO_2/ZnO/SnO_2/ZnO, or SnO_2/ZnO/SnO_2/ZnO/SnO_2, and the film thickness of a single layer of zinc oxide had better be 200 Å at most, favorably 180 Å at most. More favorably, the film thickness is particularly desirable to be 100 Å at most, and the film is composed by the five layer series. Considering the productivity of film depositing, a multi-layer composed of the five layer series is favorable, in which the film thickness of the each layer is unified to about 90 Å, and total thickness of the film is about 450 Å.

Such oxide film layer (B) is further favorable, when the internal stress is 1.1 x 10^{10} dyne/cm^2 at most. When the internal stress of zinc oxide is low, the film is difficult to be peeled off by the influence of acid from the edge of the film. Therefore, the low internal stress of zinc oxide is favorable also in view of the acid resistance and the moisture resistance. It is more preferable when the diffraction angle 2θ (center of gravity position) of (002) diffraction line of zinc oxide by X-ray diffraction method, is within the range of 33.88° to 35.00°, particularly, from 34.00° to 34.88°.

This is the replacement sheet

Date: 19 OCT 1996

This Sheet Has Been Replaced

The material of the oxide film 2 other than oxide film (B) is not especially restricted. As the oxide film 2, a film of ZnO, SnO_2, TiO_2, and a multi-layer film containing at least 2 kinds of these, and a film further added with the other elements, can be utilized. Furthermore, considering the productivity, a film in which at least two layers of ZnO, SnO_2, and ZnO-SnO_2 are alternatively laminated, and a film in which at least one of Aℓ, Si, B, Ti, Sn, Mg, and Cr, are added by 10 atomic % at most of the total quantity including Zn, are favorable.

Considering the color tone and the visible light transmittance thereof, the thickness of the oxide film 2 is desirable to be in the range of 200 to 700 Å. In case of a multi-layer film, the total thickness may be in the range of 200 to 700 Å, and the film thickness of each layer is not restricted.

As the metallic film 3 in the present invention, a metal layer with high heat reflective function, whose major component is Ag, or Ag added with at least one of Au, Cu, and Pd, can be utilized. The metallic film 3 may also be comprising a metal layer with various other function, other than the heat reflective metal layer (i.e. Ag layer), for example, a metal layer for controlling the adhesive strength between the heat reflective metal layer and the oxide film 2 and/or the oxide film (B), or a metal layer with a barrier function

This is the replacement sheet

Date: 19 OCT 1996

This Sheet Has Been Replaced

for preventing the diffusion of the metal from the heat reflective metal layer. Considering the balance between high heat reflective function and high visible light transmittance, the film thickness of the metallic film 3 is desirable to be in the range of 50 to 150 Å, especially about 100 Å.

Especially in case of a Low-E film of five layers such as an oxide film, a metallic film, an oxide film, a metallic film, an oxide film alternately formed, or a Low-E film of more than five layers, it is desirable to use an oxide film having an internal stress of 1.1×10^{10} dyne/cm^2 at most, as an oxide film 2 (an oxide film other than the oxide film (B).)

Compared with a conventional Low-E film, the moisture resistance of the Low-E film of the present invention is considerably improved in the moisture resistance, by using a film of low internal stress of 1.1×10^{10} dyne/cm^2 at most, as an oxide film (B). This is due to the fact that the oxide film is difficult to be destroyed by the low internal stress of the oxide film, and the deterioration by moisture is prevented. Furthermore, the acid resistance is improved, by introducing a film whose major component is tin oxide in the oxide layer (B).

EXAMPLES

EXAMPLE 1

An Aℓ doped ZnO film with a thickness of 450 Å, is deposited on a glass substrate, by a direct current

This is the replacement sheet

Date: 19 OCT 1996

This Sheet Has Been Replaced

sputtering method, in an atmosphere of Argon and oxygen, of $Ar:O_2$ = 2:8, with pressure of 6.5×10^{-3} Torr, using a target made of metal of Aℓ and Zn, the composition of Aℓ being 3.0 atomic % of the total quantity including Zn. Next, an Ag film with a thickness of 100 Å is deposited in an atmosphere of only Ar with pressure of 6.5×10^{-3} Torr, using Ag as a target. Next, an Aℓ doped Zn film having a very thin thickness of about 20 Å, is deposited, without changing the atmosphere, using a target made of a metal of Aℓ and Zn, the Aℓ composition being 3.0 atomic % of the total quantity including Zn. Lastly, an Aℓ doped ZnO film is deposited in an atmosphere of Argon and oxygen of $Ar:O_2$ = 2:8, with pressure of 6.5×10^{-3} Torr, using a target made of metal of Aℓ and Zn, the composition of the Aℓ being 3.0 atomic % of the total quantity including Zn. During the deposition of the Aℓ doped ZnO film, the Aℓ doped Zn film is oxidized in the oxygen containing atmosphere to be Aℓ doped ZnO film. Therefore the total thickness of Aℓ doped ZnO film deposited on the Ag film is 450 Å. The substrate temperature in depositing film is room temperature. The dc power density in depositing Aℓ doped ZnO film, is 2.7 W/cm^2, and 0.7 W/cm^2, in depositing Ag film.

When the obtained Low-E film is checked by X-ray diffraction method, the diffraction angle 2θ (center of gravity position) of (002) diffraction line of ZnO, is found to be 34.12°. The internal stress of the Aℓ doped

This is the replacement sheet

19 OCT 1996

Date:

This Sheet Has Been Replaced

ZnO film (450 Å) formed under the same condition, is 6.5 x 10^9 dyne/cm^2.

The moisture resistance test is performed on the Low-E film, in which samples are left in an atmosphere of relative humidity 95% at 50°C, for 6 days. The appearance of the samples after the moisture resistance test, is favorable, in which although very small spots are observed, conspicuous white dots and white turbidity are not observed. According to a SEM photograph of the surface of the film after the moisture resistance test, almost no cracks, nor wrinkles, nor exfoliations are observed on the surface of the film.

A glass on which the above Low-E film is deposited, is laminated with another glass plate with a plastic intermediate film therebetween, disposing the Low-E film inside. The same moisture test is carried out also for the laminated glass. As the result, no white turbidity nor white spot is observed on the film even after 14 days of the moisture resistance test.

EXAMPLE 2

A Low-E film is deposited, using an RF sputtering method, by successively coating ZnO film, Ag film, and Aℓ doped ZnO film, having the film thicknesses of 450 Å, 100 Å, and 450 Å, respectively, on a glass substrate. As a material of target, ZnO, Ag, and ZnO added with $Aℓ_2O_3$ (98 weight % ZnO, 2 weight % $Aℓ_2O_3$), respectively, is used and a sputtering is performed in argon gas. The

This is the replacement sheet

19 OCT 1996

Date:

This Sheet Has Been Replaced

sputtering pressure is 1.8×10^{-3} Torr, the substrate temperature is room temperature, and the RF power density is 3 W/cm^2.

When the obtained Low-E film is checked by X-ray diffraction method, the diffraction angle 2θ (center of gravity position) of (002) diffraction line of ZnO, is found to be 34.00°. The internal stress of Aℓ doped ZnO film deposited under the same condition, is 6.2×10^9 dyne/cm^2.

The same moisture resistance test as in Example 1 is carried out on the above film. The moisture resistance of the film is fair, in which although very small spots are observed on the film after the test, no conspicuous white turbidity nor white spot is observed.

EXAMPLE 3

A Low-E film is produced, which has a film composition of ZnO/SnO_2/ZnO/SnO_2/ZnO/Ag/ZnO/glass, by the same method as in Example 2. The film thickness of Ag is 100 Å, that of ZnO between Ag and glass, 450 Å, and those of ZnO layer and SnO_2 layer on top of Ag layer, 90 Å. ZnO layer and Ag layer are obtained by sputtering ZnO and Ag targets in Ar gas, and SnO_2 layer is obtained by sputtering SnO_2 target in an atmosphere of a mixed gas of Ar and O_2. The sputtering pressure, the substrate temperature, and the RF power in film deposition of ZnO and Ag are the same in the above Example 2. The power density is 1 W/cm^2 in film deposition of SnO_2, gas flow

This is the replacement sheet

Date: 19 OCT 1996

This Sheet Has Been Replaced

rate ratio of $A\ell:O_2$ is 8:2.

The internal stress of film of $ZnO/SnO_2/ZnO/SnO_2/ZnO$, formed under the same condition as above, is 9.2×10^9 dyne/cm^2.

The moisture resistance of the Low-E film obtained, is as favorable as in the above Example.

EXAMPLE 4

A Low-E film is produced, of which film composition is $ZnO/SnO_2/ZnO/SnO_2/ZnO/Ag/ZnO/SnO_2/ZnO/SnO_2/ZnO$/glass, by the same method as in Example 3. The thickness of Ag layer is 100 Å, those of ZnO layer and SnO_2 layer are 90 Å for each layer. The target, and the sputtering gas, the sputtering pressure, the substrate temperature, and RF power density, are the same as in Example 3.

The internal stress of the film of $ZnO/SnO_2/ZnO/SnO_2/ZnO$ produced under this condition, is 9.2×10^9 dyne/cm^2.

The moisture resistance of the obtained Low-E film, is as favorable as in the above Example.

EXAMPLE 5

A ZnO film, an Ag film and ZnO film, having a film thicknesses of 450 Å, 100 Å, and 450 Å, respectively, are successively formed on a glass substrate, by the same method as in Example 2. As materials of targets, ZnO and Ag are used, and sputterings are performed in argon gas atmosphere. The sputtering pressure, the substrate temperature, the power density are the same as in Example

This is the replacement sheet

Date: 19 OCT 1996

This Sheet Has Been Replaced

2. A heat treatment is performed on the film after the film deposition, in which samples are heated at 400°C in N_2 atmosphere, for 1 hour.

When the Low-E film after the heat treatment, is checked by X-ray diffraction method, the diffraction angle 2θ (center of gravity position) of (002) diffraction line of ZnO, is found to be 34.42°.

The moisture resistance of the Low-E film is as favorable as in the above Example.

COMPARATIVE EXAMPLE 1

A ZnO film, an Ag film, a ZnO film, with film thicknesses of 450 Å, 100Å, and 450 Å, respectively, are successively coated on a glass substrate, by the same method as in the above Example 2. As for materials of targets, ZnO and Ag are used, and sputtering is performed in argon gas atmosphere. The sputtering pressure, the substrate temperature, and the RF power density are the same as in Example 2.

When the obtained Low-E film is checked by X-ray diffraction method, the diffraction angle 2θ (center of gravity position) of (002) diffraction line of ZnO is found to be 33.78°. The internal stress of ZnO film formed under this condition, is 1.5×10^{10} dyne/cm^2.

The Low-E film after the moisture resistance test, have a thin turbidity on the whole area of the surface of samples, and recognizable white spots with diameter of at least 1 mm are clearly observed.

This is the replacement sheet

Date: 19 OCT 1996

This Sheet Has Been Replaced

According to the same SEM photograph after the moisture resistance test, cracks prevail on the whole area of the surface of the film, which shows considerable destruction of the film.

A glass on which the above Low-E film is deposited, is laminated with another glass plate with a plastic intermediate film therebetween, disposing the Low-E film inside. The same moisture test is carried out also for this laminated glass. As a result, clear white turbidity is observed on the edge of the film after 14 days of the moisture resistance test.

EXAMPLE 6

A Low-E film having the composition of $ZnO/SnO_2/ZnO/SnO_2/ZnO/Ag/ZnO/SnO_2/ZnO/SnO_2/ZnO$/glass, is made by using metal targets made of zinc, tin, and silver, respectively, in which the Ag film is made by a direct current sputtering method, in argon atmosphere, and the SnO_2 film and the ZnO film are made by a reactive direct current sputtering method in an atmosphere containing oxygen. The thickness of Ag film is 100 Å and those of ZnO film and SnO_2 film are 90 Å for each layer, respectively. The visible light transmittance of the glass having such Low-E film is 86%, and its emissivity is 0.06.

An acid resistance test was performed on the glass with Low-E film, in which the glass is immersed in 1 N hydrochloric acid. No change is observed until 2 minutes

This is the replacement sheet

19 OCT 1996

Date:

This Sheet Has Been Replaced

after the immersion. However, after 3 minutes the color of the sample begins to change into brownish color from edge of the film. After 5 minutes a part of the film is observed to be exfoliated.

COMPARATIVE EXAMPLE 2

A Low-E film having the film composition of ZnO/Ag/ZnO/glass is made, by using metal targets made of zinc and silver, respectively, in which the Ag film is made by a direct current sputtering method, in argon atmosphere, and the ZnO film is made by a reactive direct current sputtering method, in a atmosphere containing oxygen. The thickness of the Ag film is 100 Å, and the thickness of the ZnO film is 450 Å. The visible light transmittance of the glass having the Low-E film, is 86%, and its emissivity is 0.06.

An acid resistance test was performed on the glass with Low-E film, in which the glass is immersed in 1 N hydrochloric acid. The film begins to be exfoliated just after the immersion, and after 5 minutes, the Low-E film is totally exfoliated from the glass, and vanished.

In the Low-E film of this invention, the moisture resistance and the acid resistance are significantly improved. Accordingly, the handling of the glass with such Low-E film on single plate, is likely to become easy. Furthermore, the possibility of the preservation of such glass in single plate for a long time in a room, is realized. Furthermore the reliability of the Low-E

This is the replacement sheet

Date: 19 OCT 1996

glass for an automobile or for a building, is promoted. When the film is used in a laminated glass, the glass is not deteriorated by the moisture contained in an intermediate film, which improves the durability of the laminated glass for an automobile or for a building.

The Low-E film of this invention is electrically conductive, for it is comprising the metal layer. Therefore the Low-E film of the present invention can be used in various technical fields, for example, as an electrode in electronics field, or as a heating element for electrically heated window, or as an electromagnetic shielding film for a window or for electronics use. In some cases, the Low-E film of the present invention can be applied on a substrate with various functioning layers therebetween, in which case the optical property of this Low-E film can be adjusted depending on each purpose by choosing suitable film thickness for each layer comprised in the Low-E film of the present invention.

This Sheet Has Been Replaced

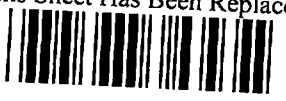

This is the replacement sheet

19 OCT 1996

Date:



CLAIMS:

1 . A low emissivity film which comprises:

a substrate; and

a coating of oxide and metallic films alternately formed on the substrate in a total of (2n+1) layers where n is an integer being equal to or more than 1, with an innermost layer thereof being an oxide film,

wherein the oxide film (B) formed on the outer side of the metallic film (A) being most apart from the substrate, is a single layer film or a multi-layer film having at least a film whose major component is hexagonal zinc oxide; and

a value of a diffraction angle 2θ (center of gravity position) of (002) diffraction line of the hexagonal zinc oxide of the low emissivity film in X-ray diffraction method using CuKα radiation, is not smaller than 33.88° and not larger than 35.00°.

2. The low emissivity film according to Claim 1 , wherein the value of the diffraction angle 2θ (center of gravity position) of (002) diffraction line of the hexagonal zinc oxide in x-ray diffraction method using CuKα radiation is not smaller than 34.00° and not larger than 34.88°.

3. The low emissivity film according to Claim 1, wherein the metallic film (A) is a metallic film whose major component is Ag.

'4. The low emissivity film according to Claim 1, wherein the outermost layer of said oxide film (B) is a layer for controlling the adhesive strength thereof with a plastic intermediate film for lamination with another substrate.

This Sheet Has Been Replaced



This is the replacement sheet
19 OCT 1996
Date:

A LOW EMISSIVITY FILM

ABSTRACT

A low emissivity film which comprises:

a substrate; and

a coating of oxide and metallic films alternately formed on the substrate in a total of (2n+1) layers where n is an integer being equal to or more than 1, with an innermost layer thereof being an oxide film,

wherein the oxide film (B) formed on the outer side of the metallic film (A) being most apart from the substrate, is a single layer film or a multi-layer film having at least a film whose major component is hexagonal zinc oxide; and

a value of a diffraction angle 2θ (center of gravity position) of (002) diffraction line of the hexagonal zinc oxide of the low emissivity film in X-ray diffraction method using CuKα radiation, is not smaller than 33.88° and not larger than 35.00°.

FIGURE 1B

This Sheet Has Been Replaced

This is the replacement sheet

Date: 19 OCT 1996

FIGURE 1

a

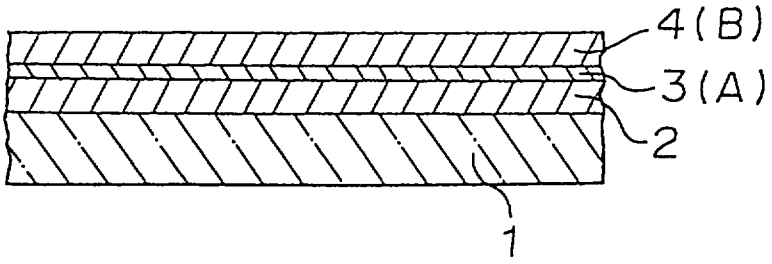

b

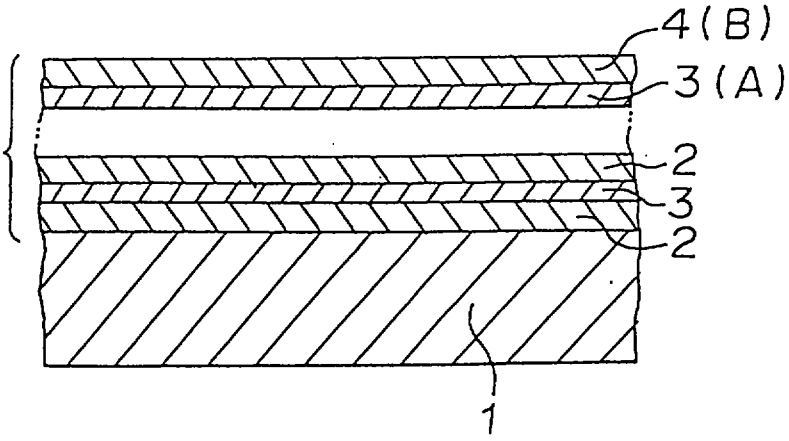

This Sheet Has Been Replaced



This is the replacement sheet

Date: 19 OCT 1996

REPLACED SHEETS SG
☑ Description : paged ..1.... to paged ..6...
☑ Claim(s) : paged ..7... to paged .....
☑ Drawing(s) : paged ..1... to paged .....
☐ Abstract : paged ..... to paged .....

REPLACEMENT SHEETS SG
☑ Description : paged 1 to paged 6
☑ Claim(s) : paged 7 to paged —
☑ Drawing(s) : paged 1 to paged —
☐ Abstract : paged — to paged —
DATE OF RECEIPT 24-2-1998

A LOW EMISSIVITY FILM

Description

This invention relates to a low emissivity film which is excellent in durability, especially in moisture resistance or in acid resistance.

A film composed of (2n+1) layers (n≧1) such as a film composed of three layers in which an oxide film, an Ag film, and an oxide film are successively coated on a surface of a substrate, or a film composed of five layers in which an oxide film, an Ag film, an oxide film, an Ag film, and an oxide film are successively coated on a surface of a substrate, is a heat reflective film called Low-E (Low-Emissivity) film. A glass in which such a Low-E film is formed, is called a Low-E glass. This glass can prevent lowering of room temperature by reflecting the thermal infrared radiation emitted from within the heated room, which is used mainly in cold district on the purpose of decreasing heating load. Furthermore, since this glass has a heat insulating effect of the solar radiation energy, it is adopted in a windshield of an automobile. Since this glass is transparent and is electrically conductive, it has a usage as an electromagnetic shielding glass. When this glass is equipped with an electric heating such as a bus bar composed of an electrically conductive printing or the like, this glass can be used as an electrically heated window.

As a major Low-E glass, a glass is exemplified having a film composition of ZnO/Ag/ZnO/glass. However, since this film is devoid of durability such as anti-scratching property or chemical stability, it can not be used on a single plate, and it is necessary to use the film in a laminated glass or in double glazing. This film has a problem especially in moisture resistance, in which white dot or white turbidity is caused by moisture in the air or by moisture contained in an intermediate film in case of the laminated glass. Furthermore, since ZnO is insufficient in acid resistance, the film may be deteriorated by acid substance in the air. Due to these shortcomings, caution is required in the storage or in the handling of the single plate.

It is an object of the present invention to provide a Low-E film capable of overcoming the above shortcomings, and excellent in the durability, especially in the moisture resistance or in the acid resistance.

According to an aspect of the present invention, there is provided a low emissivity film which comprises:

a substrate; and

a coating of oxide and metallic films alternately formed on the substrate in a total of (2n+1) layers where n is an integer being equal to or more than 1, with the innermost layer being an oxide film,

wherein the oxide film (B) formed on the outer side of the metallic film (A) being mostly apart from the substrate, is a single layer film or a multi-layer film having at least a film whose major component is hexagonal zinc oxide; and

a value of a diffraction angle 2θ (center of gravity position) of (002) diffraction line of the hexagonal zinc oxide of the low emissivity film in X-ray diffraction method using CuKα radiation is not smaller than 33.88° and not larger than 35.00°.

Explanation will be given on the oxide film (B) in the present invention, in the followings.

As mentioned above, in case of the conventional Low-E glass (film composition: ZnO/Ag/ZnO/glass), when it is left in a room, white turbidity or white dot appears on the film by the moisture in the air.

When the film with white turbidity or white dot is observed by a scanning electron microscope (SEM), the existence of crack or wrinkle, and exfoliation of the film are recognized on the surface of the film.

When an elementary analysis is performed on the exfoliated part of this film, with respect to Ag and Zn, Ag is found to exist at certain amount irrespective of the existence of the exfoliation. On the contrary, the detected amount of Zn is halved at the exfoliated part. Accordingly, the exfoliation is found to take place on the interface between the uppermost layer of ZnO and the Ag layer.

Next, an investigation is performed on samples before and after a moisture resistance test (the samples are left for 6 days, at 50°C, in an atmosphere of relative humidity of 95%) by X-ray diffraction method. The diffraction angle 2θ (center of gravity position of peak), interplanar spacing d, and the peak width (integral width) I.W. with respect to (002) diffraction line of hexagonal zinc oxide, and (111) diffraction line of cubic Ag, are respectively shown in Table 1.

It is possible to detect degree of strain of the lattice due to an internal stress, by a deviation of peaks in X-ray diffraction method. In case of the sample of ZnO(b)/Ag/ZnO(a)/glass, a peak of ZnO(b) of the uppermost layer, is detected with an intensity 5 to 15 times as much as a peak of ZnO(a). Therefore, a peak of ZnO of X-ray diffraction method with respect to the total of the sample, is almost considered to be the peak of hexagonal ZnO(b) of the uppermost layer, although there may be more or less an influence of ZnO(a).

This Sheet Has Been Replaced

This is the replacement sheet

Date: 24 FEB 1998

Table 1

	ZnO (002)		Ag (111)	
	Before moisture resistance test	After moisture resistance test	Before moisture resistance test	After moisture resistance test
2θ (deg.)	33.78	33.91	38.09	38.09
d (Å)	2.650	2.641	2.361	2.361
I·w (deg.)	0.510	0.623	0.977	0.675

According to Table 1, (002) diffraction line of ZnO in the Low-E film before the moisture resistance test, is deviated in its position, compared with 2θ = 34.44° of ZnO powder. This suggests the existence of a lattice strain. This lattice strain is due to an internal stress of the film. In the samples before the moisture resistance test, the interplanar space d_{002} = 2.650 Å, which is larger than d_{002} = 2.602 Å of ZnO powder by 1.8%. From this result, the film is found to receive a considerably large compressive stress. In case of samples after the moisture resistance test, the lattice strain is more or less decreased, as d_{002} = 2.641 Å. This test result corresponds with the fact in which the internal stress of ZnO at the uppermost layer is partly relieved by the crack, the wrinkle, and the exfoliation.

Concerning the (111) diffraction line of Ag, the peak width after the moisture resistance test is decreased. Therefore grain growth of Ag is considered to take place by performing the moisture resistance test.

Accordingly, the mechanism of generation of the white turbidity or white dot, is considered as follows. The hexagonal ZnO film at the uppermost layer can not resist to the large internal stress. The film is exfoliated from the interface with Ag film, and is destructed. Next grain size of Ag is increased. The film displays the white turbidity or white dot since light is scattered by the destroyed surface and by the large silver grain. In the examples of Table 1, the internal stress is a compressive stress. However there are two kinds of internal stress, that is, a compressive stress and a tensile stress, both of which cause destruction of a film.

From the above observation, in this invention, it is found that the decrease of the internal stress of ZnO film at the upper most layer, is effective to prevent the white turbidity or white dot due to moisture.

Figures 1a and 1b are sectional diagrams showing embodiments of low emissivity films according to the present invention. Figure 1a is a sectional diagram of the low emissivity film composed of three layers, and Figure 1b is a sectional diagram of the low emissivity film composed of (2n+1) layers. A reference numeral 1 designates a substrate, 2, an oxide film, 3, a metallic film, and 4, an oxide film (B) having low internal stress.

As a substrate 1 in this invention, a film or a plate substrate made of plastic or the like can be used as well as a glass plate.

The oxide film (B) can be used, so long as the internal stress is equal to or less than 1.1×10^{10} dyne/cm^2, and is not particularly restricted. The internal stress of the film depends considerably on the deposition condition of the film. The deposition condition is necessary to be controlled precisely, when a film of low internal stress, is formed. As a method in which a tendency of decreasing internal stress of the film is shown, a method of changing the deposition condition (especially depositing by a sputtering method), such as, increasing the pressure of the atmosphere in deposition of the film (sputtering pressure), or heating the substrate in depositing the film, and a method in which a heat treatment is performed after depositing the film, are suggested. By these methods, the internal stress of the film can be decreased. The respective concrete conditions can be chosen depending upon each apparatus for depositing the film, and are not particularly restricted.

Especially, concerning ZnO film comprised in the oxide film (B), as mentioned above, the internal stress of the zinc oxide film almost corresponds to the diffraction angle 2θ (center of gravity position) in X-ray diffraction method. The crystal structure of a film whose major component is zinc oxide is hexagonal. To enhance the durability of the Low-E film of this invention, the range of the diffraction angle 2θ (center of gravity position) of (002) diffraction line of the hexagonal zinc oxide in X-ray diffraction method using CuKα radiation of the Low-E film, is desirable to be from 33.88° to 35.00°, particularly, from 34.00° to 34.88°. The value of the diffraction angle 2θ of 34.44° at most, corresponds with a compressive stress, and the value of 34.44° at least, with a tensile stress.

When the other elements whose ionic radii are smaller than those of Zn^{2+} in oxidized states are added (doped) in the ZnO film, there is a tendency of decreasing the internal stress, although depending on the condition of film deposition. A film whose major component is ZnO, doped with at least one selected from the group consisted of Aℓ, Si, B, Ti, Sn, Mg, and Cr can be used in the same way as in ZnO film. Since the effect of decreasing the internal stress remains almost unchanged, when at least one of Aℓ, Si, B, Ti, Sn, Mg, and Cr, are added more than 10% in atomic ratio, of the total amount including Zn, it is sufficient to add these elements by 10% at most. Concerning the ZnO film doped with

This is the replacement sheet

This Sheet Has Been Replaced

Date: 24 FEB 1998

the other elements, the same reasoning is applicable as in ZnO film, with respect to the deviation of diffraction angle 2θ (center of gravity position) of (002) diffraction line of hexagonal zinc oxide.

The film thickness of the oxide film (B), although not especially restricted, is desirable to be within the range of 20 - 70 nm (200 to 700 Å), considering a color tone on the total of the Low-E film, and a visible light transmittance thereof.

When the oxide film (B) is deposited by reactive sputtering in the oxygen-containing atmosphere, it is preferable to first deposit a thin metal layer in non-oxidation atmosphere on the metallic film (A), in order to prevent the oxidation of the metallic film (A). The thin metal layer is oxidized to be an oxide layer during the deposition of the oxide film (B). Therefore the above preferable thickness of the oxide film (B) includes the thickness of the oxide layer formed by the oxidation of said thin metal layer.

In case of a multi-layer film which is composed of at least two layers by combining films of high internal stress and those of low internal stress, as an oxide film (B), as shown in the above, the number of layers and the film thickness of a layer, may be chosen depending on an apparatus, and is not especially restricted, so long as the total thickness is within the range of 20 - 70 nm (200 to 700Å.) Moreover, the film thickness of each layer may be different.

Table 2 shows the relationship among the internal stress of the oxide film (B), the diffraction angle 2θ (center of gravity position) of (002) diffraction line of zinc oxide of a Low-E film in which the oxide film (B) is formed on Ag/ZnO/glass by a sputtering method, and the moisture resistance of the Low-E film.

Table 2

	Oxide film (B) 450 Å		Oxide film (B)/Ag/ZnO/glass 450 Å 100 Å 450 Å	
	Material	A value of internal stress (dyne/cm^2)	(002) Diffraction line of ZnO Diffraction angle 2θ (deg.)	Moisture resistance
1	ZnO	1.5×10^{10}	33.78	X
2	ZnO	1.0×10^{10}	33.89	△
3	ZnO	6.3×10^{9}	34.10	○
4	ZnO	1.0×10^{9}	34.42	○
5	Al-doped ZnO	6.2×10^{9}	34.10	○
6	B-doped ZnO	9.5×10^{9}	33.89	○
7	Si-doped ZnO	7.8×10^{9}	33.99	○
8	Ti-doped ZnO	4.6×10^{9}	34.21	○
9	Cr-doped ZnO	6.1×10^{9}	34.12	○
10	Mg-doped ZnO	7.9×10^{9}	33.99	○
11	Sn-doped ZnO	5.7×10^{9}	34.18	○
12	ZnO/SnO_2/ZnO /SnO_2/ZnO	9.2×10^{9}	----	○

The internal stress in Table 2 is in compressive stress. The moisture resistance is evaluated by performing a test in which samples are left in an atmosphere of the relative humidity of 95% at 50°C, for 6 days. In this evaluation standard, ○ is for a sample having no white turbidity at adjacent to the edge of the film, and no white spot with a diameter of at least 1 mm, △ for a sample having no turbidity at adjacent to the edge of the film, and white spot with a diameter of 1 to 2 mm, and X for a sample having white turbidity at adjacent to the edge of the film, and white spot with a diameter at least 2 mm. The doping quantities of Al, Si, B, Ti, Sn, Mg, and Cr for all the samples are 4% in atomic ratio, of the total amount including Zn. In sample 2, the pressure of the atmosphere in film deposition, is increased compared with sample 1. In sample 3, the temperature of the substrate in film forming is elevated compared with sample 1. Sample 4 is heated after film deposition. It is found from Table 2, that the moisture resistance of the Low-E film, does not depend on the material of the film, or number of layers; a single layer or multi-layer, and depends on the internal stress and the diffraction angle 2θ (center of gravity position) of (002) diffraction line of ZnO.

Such oxide film layer (B) is further favorable, when the internal stress is 1.1×10^{10} dyne/cm^2 at most. When the internal stress of zinc oxide is low, the film is difficult to be peeled off by the influence of acid from the edge of the film. Therefore, the low internal stress of zinc oxide is favorable also in view of the acid resistance and the moisture resistance. It is necessary that the diffraction angle 2θ (center of gravity position) of (002) diffraction line of zinc oxide by X-

This Sheet Has Been Replaced

This is the replacement sheet

Date: 24 FEB 1998

ray diffraction method, is within the range of 33.88° to 35.00°, preferably, from 34.00° to 34.88°.

The material of the oxide film 2 other than oxide film (B) is not especially restricted. As the oxide film 2, a film of ZnO, SnO_2, TiO_2, and a multi-layer film containing at least 2 kinds of these, and a film further added with the other elements, can be utilized. Furthermore, considering the productivity, a film in which at least two layers of ZnO, SnO_2, and ZnO-SnO_2 are alternately laminated, and a film in which at least one of Aℓ, Si, B, Ti, Sn, Mg, and Cr, are added by 10 atomic % at most of the total quantity including Zn, are favorable.

Considering the color tone and the visible light transmittance thereof, the thickness of the oxide film 2 is desirable to be in the range of 200 to 700 Å. In case of a multi-layer film, the total thickness may be in the range of 200 to 700 Å, and the film thickness of each layer is not restricted.

As the metallic film 3 in the present invention, a metal layer with high heat reflective function, whose major component is Ag, or Ag added with at least one of Au, Cu, and Pd, can be utilized. The metallic film 3 may also be comprising a metal layer with various other function, other than the heat reflective metal layer (i.e. Ag layer), for example, a metal layer for controlling the adhesive strength between the heat reflective metal layer and the oxide film 2 and/or the oxide film (B), or a metal layer with a barrier function for preventing the diffusion of the metal from the heat reflective metal layer. Considering the balance between high heat reflective function and high visible light transmittance, the film thickness of the metallic film 3 is desirable to be in the range of 50 to 150 Å, especially about 100 Å.

Especially in case of a Low-E film of five layers such as an oxide film, a metallic film, an oxide film, a metallic film, an oxide film alternately formed, or a Low-E film of more than five layers, it is desirable to use an oxide film having an internal stress of 1.1×10^{10} dyne/cm^2 at most, as an oxide film 2 (an oxide film other than the oxide film (B).)

Compared with a conventional Low-E film, the moisture resistance of the Low-E film of the present invention is considerably improved in the moisture resistance, by using a film of low internal stress of 1.1×10^{10} dyne/cm^2 at most, as an oxide film (B). This is due to the fact that the oxide film is difficult to be destroyed by the low internal stress of the oxide film, and the deterioration by moisture is prevented.

EXAMPLES

EXAMPLE 1

An Aℓ doped ZnO film with a thickness of 450 Å, is deposited on a glass substrate, by a direct current sputtering method, in an atmosphere of Argon and oxygen, of $Ar:O_2 = 2:8$, with pressure of 6.5×10^{-3} Torr, using a target made of metal of Aℓ and Zn, the composition of Aℓ being 3.0 atomic % of the total quantity including Zn. Next, an Ag film with a thickness of 100 Å is deposited in an atmosphere of only Ar with pressure of 6.5×10^{-3} Torr, using Ag as a target. Next, an Aℓ doped Zn film having a very thin thickness of about 20 Å, is deposited, without changing the atmosphere, using a target made of a metal of Aℓ and Zn, the Aℓ composition being 3.0 atomic % of the total quantity including Zn. Lastly, an Aℓ doped ZnO film is deposited in an atmosphere of Argon and oxygen of $Ar:O_2 = 2:8$, with pressure of 6.5×10^{-3} Torr, using a target made of metal of Aℓ and Zn, the composition of the Aℓ being 3.0 atomic % of the total quantity including Zn. During the deposition of the Aℓ doped ZnO film, the Aℓ doped Zn film is oxidized in the oxygen containing atmosphere to be Aℓ doped ZnO film. Therefore the total thickness of Aℓ doped ZnO film deposited on the Ag film is 450 Å. The substrate temperature in depositing film is room temperature. The dc power density in depositing Aℓ doped ZnO film, is 2.7 W/cm^2, and 0.7 W/cm^2, in depositing Ag film.

When the obtained Low-E film is checked by X-ray diffraction method, the diffraction angle 2θ (center of gravity position) of (002) diffraction line of ZnO, is found to be 34.12°. The internal stress of the Aℓ doped ZnO film (450 Å) formed under the same condition, is 6.5×10^9 dyne/cm^2

The moisture resistance test is performed on the Low-E film, in which samples are left in an atmosphere of relative humidity 95% at 50°C, for 6 days. The appearance of the samples after the moisture resistance test, is favorable, in which although very small spots are observed, conspicuous white dots and white turbidity are not observed. According to a SEM photograph of the surface of the film after the moisture resistance test, almost no cracks, nor wrinkles, nor exfoliations are observed on the surface of the film.

A glass on which the above Low-E film is deposited, is laminated with another glass plate with a plastic intermediate film therebetween, disposing the Low-E film inside. The same moisture test is carried out also for the laminated glass. As the result, no white turbidity nor white spot is observed on the film even after 14 days of the moisture resistance test.

EXAMPLE 2

A Low-E film is deposited, using an RF sputtering method, by successively coating ZnO film, Ag film, and Aℓ doped ZnO film, having the film thicknesses of 450 Å, 100 Å, and 450 Å, respectively, on a glass substrate. As a material of target, ZnO, Ag, and ZnO added with $Aℓ_2O_3$ (98 weight % ZnO, 2 weight % $Aℓ_2O_3$), respectively, is used and a sputter-

This Sheet Has Been Replaced

This is the replacement sheet

24 FEB 1998

Date:

ing is performed in argon gas. The sputtering pressure is 1.8×10^{-3} Torr, the substrate temperature is room temperature, and the RF power density is 3 W/cm^2.

When the obtained Low-E film is checked by X-ray diffraction method, the diffraction angle 2θ (center of gravity position) of (002) diffraction line of ZnO, is found to be 34.00°. The internal stress of Aℓ doped ZnO film deposited under the same condition, is 6.2×10^9 dyne/cm^2.

The same moisture resistance test as in Example 1 is carried out on the above film. The moisture resistance of the film is fair, in which although very small spots are observed on the film after the test, no conspicuous white turbidity nor white spot is observed.

EXAMPLE 3

A Low-E film is produced, which has a film composition of ZnO/SnO_2/ZnO/SnO_2/ZnO/Ag/ZnO/glass, by the same method as in Example 2. The film thickness of Ag is 100 Å, that of ZnO between Ag and glass, 450 Å, and those of ZnO layer and SnO_2 layer on top of Ag layer, 90 Å. ZnO layer and Ag layer are obtained by sputtering ZnO and Ag targets in Ar gas, and SnO_2 layer is obtained by sputtering SnO_2 target in an atmosphere of a mixed gas of Ar and O_2. The sputtering pressure, the substrate temperature, and the RF power in film deposition of ZnO and Ag are the same in the above Example 2. The power density is 1 W/cm^2 in film deposition of SnO_2, gas flow rate ratio of Ar:O_2 is 8:2.

The internal stress of film of ZnO/SnO_2/ZnO/SnO_2/ZnO, formed under the same condition as above, is 9.2×10^9 dyne/cm^2.

The moisture resistance of the Low-E film obtained, is as favorable as in the above Example.

EXAMPLE 4

A Low-E film is produced, of which film composition is ZnO/SnO_2/ZnO/SnO_2/ZnO/Ag/ZnO/SnO_2/ZnO/SnO_2/ZnO/glass, by the same method as in Example 3. The thickness of Ag layer is 100 Å, those of ZnO layer and SnO_2 layer are 90 Å for each layer. The target, and the sputtering gas, the sputtering pressure, the substrate temperature, and RF power density, are the same as in Example 3.

The internal stress of the film of ZnO/SnO_2/ZnO/SnO_2/ZnO produced under this condition, is 9.2×10^9 dyne/cm^2.

The moisture resistance of the obtained Low-E film, is as favorable as in the above Example.

EXAMPLE 5

A ZnO film, an Ag film and ZnO film, having a film thicknesses of 450 Å, 100 Å, and 450 Å, respectively, are successively formed on a glass substrate, by the same method as in Example 2. As materials of targets, ZnO and Ag are used, and sputterings are performed in argon gas atmosphere. The sputtering pressure, the substrate temperature, the power density are the same as in Example 2. A heat treatment is performed on the film after the film deposition, in which samples are heated at 400°C in N_2 atmosphere, for 1 hour.

When the Low-E film after the heat treatment, is checked by X-ray diffraction method, the diffraction angle 2θ (center of gravity position) of (002) diffraction line of ZnO, is found to be 34.42°.

The moisture resistance of the Low-E film is as favorable as in the above Example.

COMPARATIVE EXAMPLE 1

A ZnO film, an Ag film, a ZnO film, with film thicknesses of 450 Å, 100Å, and 450 Å, respectively, are successively coated on a glass substrate, by the same method as in the above Example 2. As for materials of targets, ZnO and Ag are used, and sputtering is performed in argon gas atmosphere. The sputtering pressure, the substrate temperature, and the RF power density are the same as in Example 2.

When the obtained Low-E film is checked by X-ray diffraction method, the diffraction angle 2θ (center of gravity position) of (002) diffraction line of ZnO is found to be 33.78°. The internal stress of ZnO film formed under this condition, is 1.5×10^{10} dyne/cm^2.

The Low-E film after the moisture resistance test, have a thin turbidity on the whole area of the surface of samples, and recognizable white spots with diameter of at least 1 mm are clearly observed.

According to the same SEM photograph after the moisture resistance test, cracks prevail on the whole area of the surface of the film, which shows considerable destruction of the film.

A glass on which the above Low-E film is deposited, is laminated with another glass plate with a plastic intermediate film therebetween, disposing the Low-E film inside. The same moisture test is carried out also for this laminated glass. As a result, clear white turbidity is observed on the edge of the film after 14 days of the moisture resistance test.

This Sheet Has Been Replaced



This is the replacement sheet

Date: 24 FEB 1998

A Low-E film having the composition of ZnO/SnO_2/ZnO/SnO_2/ZnO/Ag/Zno/SnO_2/ZnO/SnO_2/ZnO/glass, is made by using metal targets made of zinc, tin, and silver, respectively, in which the Ag film is made by a direct current sputtering method, in argon atmosphere, and the SnO_2 film and the ZnO film are made by a reactive direct current sputtering method in an atmosphere containing oxygen. The thickness of Ag film is 100 Å and those of ZnO film and SnO_2 film are 90 Å for each layer, respectively. The visible light transmittance of the glass having such Low-E film is 86%, and its emissivity is 0.06.

An acid resistance test was performed on the glass with Low-E film, in which the glass is immersed in 1 N hydrochloric acid. No change is observed until 2 minutes after the immersion. However, after 3 minutes the color of the sample begins to change into brownish color from edge of the film. After 5 minutes a part of the film is observed to be exfoliated.

COMPARATIVE EXAMPLE 2

A Low-E film having the film composition of ZnO/Ag/ZnO/glass is made, by using metal targets made of zinc and silver, respectively, in which the Ag film is made by a direct current sputtering method, in argon atmosphere, and the ZnO film is made by a reactive direct current sputtering method, in a atmosphere containing oxygen. The thickness of the Ag film is 100 Å, and the thickness of the ZnO film is 450 Å. The visible light transmittance of the glass having the Low-E film, is 86%, and its emissivity is 0.06.

An acid resistance test was performed on the glass with Low-E film, in which the glass is immersed in 1 N hydrochloric acid. The film begins to be exfoliated just after the immersion, and after 5 minutes, the Low-E film is totally exfoliated from the glass, and vanished.

In the Low-E film of this invention, the moisture resistance and the acid resistance are significantly improved. Accordingly, the handling of the glass with such Low-E film on single plate, is likely to become easy. Furthermore, the possibility of the preservation of such glass in single plate for a long time in a room, is realized. Furthermore the reliability of the Low-E glass for an automobile or for a building, is promoted. When the film is used in a laminated glass, the glass is not deteriorated by the moisture contained in an intermediate film, which improves the durability of the laminated glass for an automobile or for a building.

The Low-E film of this invention is electrically conductive, for it is comprising the metal layer. Therefore the Low-E film of the present invention can be used in various technical fields, for example, as an electrode in electronics field, or as a heating element for electrically heated window, or as an electromagnetic shielding film for a window or for electronics use. In some cases, the Low-E film of the present invention can be applied on a substrate with various functioning layers therebetween, in which case the optical property of this Low-E film can be adjusted depending on each purpose by choosing suitable film thickness for each layer comprised in the Low-E film of the present invention.

This Sheet Has Been Replaced

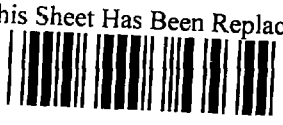

This is the replacement sheet

Date: 24 FEB 1998

Claims

1. A low emissivity film which comprises:

   a substrate; and
   a coating of oxide and metallic films alternately formed on the substrate in a total of (2n+1) layers where n is an integer being equal to or more than 1, with an innermost layer thereof being an oxide film,
   wherein the oxide film (B) formed on the outer side of the metallic film (A) being most apart from the substrate, is a single layer film or a multi-layer film having at least a film whose major component is hexagonal zinc oxide; and
   a value of a diffraction angle 2θ (center of gravity position) of (002) diffraction line of the hexagonal zinc oxide of the low emissivity film in X-ray diffraction method using CuKα radiation, is not smaller than 33.88° and not larger than 35.00°.

2. The low emissivity film according to Claim 1, wherein the value of the diffraction angle 2θ (center of gravity position) of (002) diffraction line of the hexagonal zinc oxide in x-ray diffraction method using CuKα radiation is not smaller than 34.00° and not larger than 34.88°.

3. The low emissivity film according to Claim 1, wherein the metallic film (A) is a metallic film whose major component is Ag.

4. The low emissivity film according to Claim 1, wherein the outermost layer of said oxide film (B) is a layer for controlling the adhesive strength thereof with a plastic intermediate film for lamination with another substrate.

This Sheet Has Been Replaced

This is the replacement sheet
24 FEB 1998
Date:

FIGURE 1

(a)

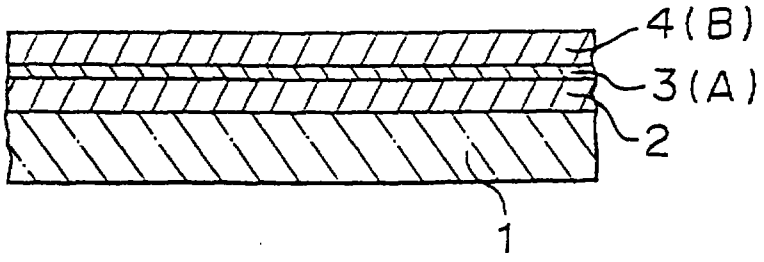

(b)

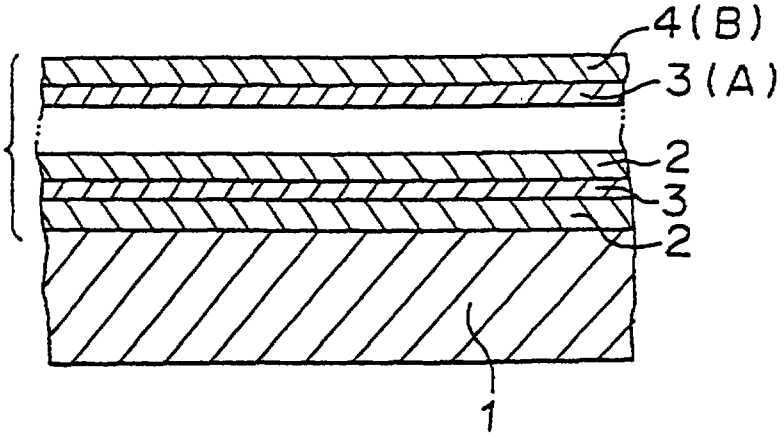

This Sheet Has Been Replaced

This is the replacement sheet
24 FEB 1998
Date:

REPLACED SHEETS SG
☑ Description : paged ..1.. to paged ..22..
☐ Claim(s) : paged ..23.. to paged ..23..
☐ Drawing(s) : paged ..1.. to paged ..1..
☐ Abstract : paged ..24.. to paged ..24..

AMENDMENT SHEETS SG
☑ Description : paged 1 to paged 22
☑ Claim(s) : paged 23 to paged 23
☑ Drawing(s) : paged 1 to paged 1
☑ Abstract : paged 24 to paged 24
DATE OF RECEIPT 19-5-1998

LOW EMISSIVITY FILM

This invention relates to a low emissivity film which is excellent in durability, especially in moisture resistance or in acid resistance.

A film composed of (2n+1) layers ($n \geq 1$) such as a film composed of three layers in which an oxide film, an Ag film, and an oxide film are successively coated on a surface of a substrate, or a film composed of five layers in which an oxide film, an Ag film, an oxide film, an Ag film, and an oxide film are successively coated on a surface of a substrate, is a heat reflective film called Low-E (Low-Emissivity) film. A glass in which such a Low-E film is formed, is called a Low-E glass. This glass can prevent lowering of room temperature by reflecting the thermal infrared radiation emitted from within the heated room, which is used mainly in cold district on the purpose of decreasing heating load. Furthermore, since this glass has a heat insulating effect of the solar radiation energy, it is adopted in a windshield of an automobile. Since this glass is

This Sheet Has Been Replaced

This is the replacement sheet
Date: 19 MAY 1998

transparent and is electrically conductive, it has a usage as an electromagnetic shielding glass. When this glass is equipped with an electric heating such as a bus bar composed of an electrically conductive printing or the like, this glass can be used as an electrically heated window.

As a major Low-E glass, a glass is exemplified having a film composition of ZnO/Ag/ZnO/glass. However, since this film is devoid of durability such as anti-scratching property or chemical stability, it can not be used on a single plate, and it is necessary to use the film in a laminated glass or in double glazing. This film has a problem especially in moisture resistance, in which white dot or white turbidity is caused by moisture in the air or by moisture contained in an intermediate film in case of the laminated glass. Furthermore, since ZnO is insufficient in acid resistance, the film may be deteriorated by acid substance in the air. Due to these shortcomings, caution is required in the storage or in the handling of the single plate.

It is an object of the present invention to provide a Low-E film capable of overcoming the above shortcomings, and excellent in the durability, especially in the moisture resistance or in the acid resistance.

According to an aspect of the present invention, there is provided a low emissivity film which comprises:

a substrate; and

This is the replacement sheet

Date: 19 MAY 1998

a coating of oxide and metallic films alternately formed on the substrate in a total of (2n+1) layers where n is an integer being equal to or more than 1, with the innermost layer being an oxide film,

wherein the oxide film (B) formed on the outer side of the metallic film (A) being mostly part from the substrate, is a single layer film or a multi-layer film having at least a film whose major component is hexagonal zinc oxide; and

a value of a diffraction angle 2θ (center of gravity position) of (002) diffraction line of the hexagonal zinc oxide of the low emissivity film in x-ray diffraction method using Cukα radiation is not smaller than 33.88° and not larger than 35.00°.

Explanation will be given on the oxide film (B) in the present invention, in the followings.

As mentioned above, in case of the conventional Low-E glass (film composition: Zno/Ag/glass), when it is left in a room, white turbidity or white dot appears on the film by the moisture in the air.

When the film with white turbidity or white dot is observed by a scanning electron microscope (SEM), the existence of crack or wrinkle, and exfoliation of the film are recognized on the surface of the film.

When an elementary analysis is performed on the exfoliated part of this film, with respect to Ag and Zn, Ag is found to exist at a certain amount irrespective of the existence of the exfoliation. On the contrary, the detected amount of Zn is halved at the exfoliated part. Accordingly, the exfoliation is found to take place on the interface between the uppermost layer of ZnO and the Ag layer.

Next, an investigation is performed on samples before and after a moisture resistance test (the samples are let for 6 days, at 50°C, in an atmosphere of relative humidity of 95%) by x-ray diffraction method. The diffraction angle 2θ (center of gravity position of peak), interplanar spacing d, and the peak width (integral width) I.W with respect to (002) diffraction line of hexagonal zinc oxide, and (111) diffraction line of cubic Ag, are respectively shown in Table 1.

This is the replacement sheet
19 MAY 1998
Date

It is possible to detect degree of strain of the lattice due to an internal stress, by a deviation of peaks in X-ray diffraction method. In case of the sample of ZnO(b)/Ag/ZnO(a)/glass, a peak of ZnO(b) of the uppermost layer, is detected with an intensity 5 to 15 times as much as a peak of ZnO(a). Therefore, a peak of ZnO of X-ray diffraction method with respect to the total of the sample, is almost considered to be the peak of hexagonal ZnO(b) of the uppermost layer, although there may be more or less an influence of ZnO(a).

Table 1

	ZnO (002)		Ag (111)	
	Before moisture resistance test	After moisture resistance test	Before moisture resistance test	After moisture resistance test
2θ (deg.)	33.78	33.91	38.09	38.09
d (Å)	2.650	2.641	2.361	2.361
1-w (deg.)	0.510	0.623	0.977	0.675

This is the replacement sheet

Date: 19 MAY 1998

According to Table 1, (002) diffraction line of ZnO in the Low-E film before the moisture resistance test, is deviated in its position, compared with 2θ = 34.44° of ZnO powder. This suggests the existence of a lattice strain. This lattice strain is due to an internal stress of the film. In the samples before the moisture resistance test, the interplanar space d_{002} = 2.650 Å, which is larger than d_{002} = 2.602 Å of ZnO powder by 1.8%. From this result, the film is found to receive a considerably large compressive stress. In case of samples after the moisture resistance test, the lattice strain is more or less decreased, as d_{002} = 2.641 Å. This test result corresponds with the fact in which the internal stress of ZnO at the uppermost layer is partly relieved by the crack, the wrinkle, and the exfoliation.

Concerning the (111) diffraction line of Ag, the peak width after the moisture resistance test is decreased. Therefore grain growth of Ag is considered to take place by performing the moisture resistance test.

Accordingly, the mechanism of generation of the white turbidity or white dot, is considered as follows. The hexagonal ZnO film at the uppermost layer can not resist to the large internal stress. The film is exfoliated from the interface with Ag film, and is destructed. Next

This is the replacement sheet

Date 19 MAY 1998

grain size of Ag is increased. The film displays the white turbidity or white dot since light is scattered by the destroyed surface and by the large silver grain. In the examples of Table 1, the internal stress is a compressive stress. However there are two kinds of internal stress, that is, a compressive stress and a tensile stress, both of which cause destruction of a film.

From the above observation, in this invention, it is found that the decrease of the internal stress of ZnO film at the upper most layer, is effective to prevent the white turbidity or white dot due to moisture.

Figures 1a and 1b are sectional diagrams showing embodiments of low emissivity films according to the present invention. Figure 1a is a sectional diagram of the low emissivity film composed of three layers, and Figure 1b is a sectional diagram of the low emissivity film composed of (2n+1) layers. A reference numeral 1 designates a substrate, 2, an oxide film, 3, a metallic film, and 4, an oxide film (B) having low internal stress.

As a substrate 1 in this invention, a film or a plate substrate made of plastic or the like can be used as well as a glass plate.

This is the replacement sheet

Date: 19 MAY 1998

The oxide film (B) can be used, so long as the internal stress is equal to or less than 1.1×10^{10} dyne/cm^2, and is not particularly restricted. The internal stress of the film depends considerably on the deposition condition of the film. The deposition condition is necessary to be controlled precisely, when a film of low internal stress, is formed. As a method in which a tendency of decreasing internal stress of the film is shown, a method of changing the deposition condition (especially depositing by a sputtering method), such as, increasing the pressure of the atmosphere in deposition of the film (sputtering pressure), or heating the substrate in depositing the film, and a method in which a heat treatment is performed after depositing the film, are suggested. By these methods, the internal stress of the film can be decreased. The respective concrete conditions can be chosen depending upon each apparatus for depositing the film, and are not particularly restricted.

Especially, concerning ZnO film comprised in the oxide film (B), as mentioned above, the internal stress of the zinc oxide film almost corresponds to the diffraction angle 2θ (center of gravity position) in X-ray diffraction method. The crystal structure of a film

This is the replacement sheet
19 MAY 1998
Date:

whose major component is zinc oxide is hexagonal. To enhance the durability of the Low-E film of this invention, the range of the diffraction angle 2θ (center of gravity position) of (002) diffraction line of the hexagonal zinc oxide in X-ray diffraction method using CuK_α radiation of the Low-E film, is desirable to be from 33.88° to 35.00°, particularly, from 34.00° to 34.88°. The value of the diffraction angle 2θ of 34.44° at most, corresponds with a compressive stress, and the value of 34.44° at least, with a tensile stress.

When the other elements whose ionic radii are smaller than those of Zn^{2+} in oxidized states are added (doped) in the ZnO film, there is a tendency of decreasing the internal stress, although depending on the condition of film deposition. A film whose major component is ZnO, doped with at least one selected from the group consisted of Aℓ, Si, B, Ti, Sn, Mg, and Cr can be used in the same way as in ZnO film. Since the effect of decreasing the internal stress remains almost unchanged, when at least one of Aℓ, Si, B, Ti, Sn, Mg, and Cr, are added more than 10% in atomic ratio, of the total amount including Zn, it is sufficient to add these elements by 10% at most. Concerning the ZnO film doped with the other elements, the same reasoning is applicable as in ZnO film, with respect to the deviation of diffraction angle 2θ (center of gravity position) of (002) diffraction line of hexagonal zinc oxide.

This is the replacement sheet

Date: 19 MAY 1998

The film thickness of the oxide film (B), although not especially restricted, is desirable to be within the range of 20-70nm (200 to 700A°), considering a color tone on the total of the Low-E film, and a visible light transmittance thereof.

When the oxide film (B) is deposited by reactive sputtering in the oxygen-containing atmosphere, it is preferable to first deposit a thin metal layer in non-oxidation atmosphere on the metallic (A), in order to prevent the oxidation of the metallic film (A). The thin metal layer is oxidized to be an oxide layer during the deposition of the oxide film (B). Therefore the above preferable thickness of the oxide film (B) includes the thickness of the oxide layer formed by the oxidation of said thin metal layer.

In case of a multi-layer film which is composed of at least two layers by combining films of high internal stress and those of low internal stress, as an oxide film (B), as shown in the above, the number of layers and the film thickness of a layer, may be chosen depending on an apparatus, and is not especially restricted, so long as the total thickness is within the range of 20-70nm (200 to 700A°). Moreover, the film thickness of each layer may be different.

Table 2 shows the relationship among the internal stress of the oxide film (B) the diffraction angle 20 (center of gravity position) of (002) diffraction line of zinc oxide of Low-E film (B) is formed on Ag/ZnO/glass by a sputtering method, and the moisture resistance of the Low-E film.

This is the replacement sheet

Date: 19 MAY 1998

Table 2

	Oxide film (B) 450 Å		Oxide film (B)/Ag/ZnO/glass 450 Å 100 Å 450 Å	
	Material	A value of internal stress (dyne/cm^2)	(002) Diffraction line of ZnO Diffraction angle 2θ (deg.)	Moisture resistance
1	ZnO	1.5×10^{10}	33.78	×
2	ZnO	1.0×10^{10}	33.89	△
3	ZnO	6.3×10^{9}	34.10	○
4	ZnO	1.0×10^{9}	34.42	○
5	Aℓ-doped ZnO	6.2×10^{9}	34.10	○
6	B-doped ZnO	9.5×10^{9}	33.89	○
7	Si-doped ZnO	7.8×10^{9}	33.99	○
8	Ti-doped ZnO	4.6×10^{9}	34.21	○
9	Cr-doped ZnO	6.1×10^{9}	34.12	○
10	Mg-doped ZnO	7.9×10^{9}	33.99	○
11	Sn-doped ZnO	5.7×10^{9}	34.18	○
12	ZnO/SnO_2/ZnO /SnO_2/ZnO	9.2×10^{9}	----	○

This is the replacement sheet

Date: 19 MAY 1998

The internal stress in Table 2 is in compressive stress. The moisture resistance is evaluated by performing a test in which samples are left in an atmosphere of the relative humidity of 95% at 50°C, for 6 days. In this evaluation standard, ○ is for a sample having no white turbidity at adjacent to the edge of the film, and no white spot with a diameter of at least 1 mm, △ for a sample having no turbidity at adjacent to the edge of the film, and white spot with a diameter of 1 to 2 mm, and × for a sample having white turbidity at adjacent to the edge of the film, and white spot with a diameter at least 2 mm. The doping quantities of Aℓ, Si, B, Ti, Sn, Mg, and Cr for all the samples are 4% in atomic ratio, of the total amount including Zn. In sample 2, the pressure of the atmosphere in film deposition, is increased compared with sample 1. In sample 3, the temperature of the substrate in film forming is elevated compared with sample 1. Sample 4 is heated after film deposition. It is found from Table 2, that the moisture resistance of the Low-E film, does not depend on the material of the film, or number of layers; a single layer or multi-layer, and depends on the internal stress and the diffraction angle 2θ (center of gravity position) of (002) diffraction line of ZnO.

This is the replacement sheet

Date: 19 MAY 1998

Such oxide film layer (B) is further favourable, when the internal stress is 1.1×10^{10} dyne/cm^2 at most. When the internal stress of zinc oxide is low, the film is difficult to be peeled off by the influence of acid from the edge of the film. Therefore, the low internal stress of zinc oxide is favourable also in view of the acid resistance and the moisture resistance. It is necessary that the diffraction angle 2θ (center of the gravity position) of (002) diffraction line of zinc oxide by X-ray diffraction method, is within the range of 33.88° to 35.00°, preferably from 34.00° to 34.88°.

The material of the oxide film 2 other than oxide film (B) is not especially restricted. As the oxide film 2, a film of ZnO, SnO_2, TiO_2, and a multi-layer film containing at least 2 kinds of these, and a film further added with the other elements, can be utilized. Furthermore, considering the productivity, a film in which at least two layers of ZnO, SnO_2, and ZnO-SnO_2 are alternatively laminated, and a film in which at least one of Aℓ, Si, B, Ti, Sn, Mg, and Cr, are added by 10 atomic % at most of the total quantity including Zn, are favorable.

Considering the color tone and the visible light transmittance thereof, the thickness of the oxide film 2 is desirable to be in the range of 200 to 700 Å. In case of a multi-layer film, the total thickness may be in the range of 200 to 700 Å, and the film thickness of each layer is not restricted.

This is the replacement sheet

Date: 19 MAY 1998

As the metallic film 3 in the present invention, a metal layer with high heat reflective function, whose major component is Ag, or Ag added with at least one of Au, Cu, and Pd, can be utilized. The metallic film 3 may also be comprising a metal layer with various other function, other than the heat reflective metal layer (i.e. Ag layer), for example, a metal layer for controlling the adhesive strength between the heat reflective metal layer and the oxide film 2 and/or the oxide film (B), or a metal layer with a barrier function for preventing the diffusion of the metal from the heat reflective metal layer. Considering the balance between high heat reflective function and high visible light transmittance, the film thickness of the metallic film 3 is desirable to be in the range of 50 to 150 Å, especially about 100 Å.

Especially in case of a Low-E film of five layers such as an oxide film, a metallic film, an oxide film, a metallic film, an oxide film alternately formed, or a Low-E film of more than five layers, it is desirable to use an oxide film having an internal stress of 1.1×10^{10} dyne/cm^2 at most, as an oxide film 2 (an oxide film other than the oxide film (B).)

This is the replacement sheet
19 MAY 1998
Date:

Compared with a conventional Low-E film, the moisture resistance of the Low-E film of the present invention is considerably improved in the moisture resistance, by using a film of low internal stress of 1.1×10^{10} dyne/cm^2 at most, as an oxide film (B). This is due to the fact that the oxide film is difficult to be destroyed by the low internal stress of the oxide film, and the deterioration by moisture is prevented.

EXAMPLES

EXAMPLE 1

An Aℓ doped ZnO film with a thickness of 450 Å, is deposited on a glass substrate, by a direct current sputtering method, in an atmosphere of Argon and oxygen, of $Ar:O_2 = 2:8$, with pressure of 6.5×10^{-3} Torr, using a target made of metal of Aℓ and Zn, the composition of Aℓ being 3.0 atomic % of the total quantity including Zn. Next, an Ag film with a thickness of 100 Å is deposited in an atmosphere of only Ar with pressure of 6.5×10^{-3} Torr, using Ag as a target. Next, an Aℓ doped Zn film having a very thin thickness of about 20 Å, is deposited, without changing the atmosphere, using a target made of a metal of Aℓ and Zn, the Aℓ composition being 3.0 atomic % of the total quantity including Zn. Lastly, an Aℓ doped ZnO film is deposited in an atmosphere of Argon and oxygen of $Ar:O_2 = 2:8$, with pressure of 6.5×10^{-3} Torr,

This is the replacement sheet

Date: 19 MAY 1998

using a target made of metal of Aℓ and Zn, the composition of the Aℓ being 3.0 atomic % of the total quantity including Zn. During the deposition of the Aℓ doped ZnO film, the Aℓ doped Zn film is oxidized in the oxygen containing atmosphere to be Aℓ doped ZnO film. Therefore the total thickness of Aℓ doped ZnO film deposited on the Ag film is 450 Å. The substrate temperature in depositing film is room temperature. The dc power density in depositing Aℓ doped ZnO film, is 2.7 W/cm^2, and 0.7 W/cm^2, in depositing Ag film.

When the obtained Low-E film is checked by X-ray diffraction method, the diffraction angle 2θ (center of gravity position) of (002) diffraction line of ZnO, is found to be 34.12°. The internal stress of the Aℓ doped ZnO film (450 Å) formed under the same condition, is 6.5 x 10^9 $dyne/cm^2$.

The moisture resistance test is performed on the Low-E film, in which samples are left in an atmosphere of relative humidity 95% at 50°C, for 6 days. The appearance of the samples after the moisture resistance test, is favorable, in which although very small spots are observed, conspicuous white dots and white turbidity are not observed. According to a SEM photograph of the surface of the film after the moisture resistance test, almost no cracks, nor wrinkles, nor exfoliations are observed on the surface of the film.

This is the replacement sheet

Date: 19 MAY 1998

A glass on which the above Low-E film is deposited, is laminated with another glass plate with a plastic intermediate film therebetween, disposing the Low-E film inside. The same moisture test is carried out also for the laminated glass. As the result, no white turbidity nor white spot is observed on the film even after 14 days of the moisture resistance test.

EXAMPLE 2

A Low-E film is deposited, using an RF sputtering method, by successively coating ZnO film, Ag film, and Aℓ doped ZnO film, having the film thicknesses of 450 Å, 100 Å, and 450 Å, respectively, on a glass substrate. As a material of target, ZnO, Ag, and ZnO added with $Aℓ_2O_3$ (98 weight % ZnO, 2 weight % $Aℓ_2O_3$), respectively, is used and a sputtering is performed in argon gas. The sputtering pressure is 1.8×10^{-3} Torr, the substrate temperature is room temperature, and the RF power density is 3 W/cm^2.

When the obtained Low-E film is checked by X-ray diffraction method, the diffraction angle 2θ (center of gravity position) of (002) diffraction line of ZnO, is found to be 34.00°. The internal stress of Aℓ doped ZnO film deposited under the same condition, is 6.2×10^9 dyne/cm^2.

This is the replacement sheet

Date: 19 MAY 1998

The same moisture resistance test as in Example 1 is carried out on the above film. The moisture resistance of the film is fair, in which although very small spots are observed on the film after the test, no conspicuous white turbidity nor white spot is observed.

EXAMPLE 3

A Low-E film is produced, which has a film composition of $ZnO/SnO_2/ZnO/SnO_2/ZnO/Ag/ZnO/glass$, by the same method as in Example 2. The film thickness of Ag is 100 Å, that of ZnO between Ag and glass, 450 Å, and those of ZnO layer and SnO_2 layer on top of Ag layer, 90 Å. ZnO layer and Ag layer are obtained by sputtering ZnO and Ag targets in Ar gas, and SnO_2 layer is obtained by sputtering SnO_2 target in an atmosphere of a mixed gas of Ar and O_2. The sputtering pressure, the substrate temperature, and the RF power in film deposition of ZnO and Ag are the same in the above Example 2. The power density is 1 W/cm^2 in film deposition of SnO_2, gas flow rate ratio of $Ar:O_2$ is 8:2.

The internal stress of film of $ZnO/SnO_2/ZnO/SnO_2/ZnO$, formed under the same condition as above, is 9.2×10^9 $dyne/cm^2$.

The moisture resistance of the Low-E film obtained, is as favorable as in the above Example.

This is the replacement sheet

Date: 19 MAY 1998

EXAMPLE 4

A Low-E film is produced, of which film composition is $ZnO/SnO_2/ZnO/SnO_2/ZnO/Ag/ZnO/SnO_2/ZnO/SnO_2/ZnO/glass$, by the same method as in Example 3. The thickness of Ag layer is 100 Å, those of ZnO layer and SnO_2 layer are 90 Å for each layer. The target, and the sputtering gas, the sputtering pressure, the substrate temperature, and RF power density, are the same as in Example 3.

The internal stress of the film of $ZnO/SnO_2/ZnO/SnO_2/ZnO$ produced under this condition, is 9.2×10^9 dyne/cm^2.

The moisture resistance of the obtained Low-E film, is as favorable as in the above Example.

EXAMPLE 5

A ZnO film, an Ag film and ZnO film, having a film thicknesses of 450 Å, 100 Å, and 450 Å, respectively, are successively formed on a glass substrate, by the same method as in Example 2. As materials of targets, ZnO and Ag are used, and sputterings are performed in argon gas atmosphere. The sputtering pressure, the substrate temperature, the power density are the same as in Example

This is the replacement sheet

Date: 19 MAY 1998

2. A heat treatment is performed on the film after the film deposition, in which samples are heated at 400°C in N_2 atmosphere, for 1 hour.

When the Low-E film after the heat treatment, is checked by X-ray diffraction method, the diffraction angle 2θ (center of gravity position) of (002) diffraction line of ZnO, is found to be 34.42°.

The moisture resistance of the Low-E film is as favorable as in the above Example.

COMPARATIVE EXAMPLE 1

A ZnO film, an Ag film, a ZnO film, with film thicknesses of 450 Å, 100Å, and 450 Å, respectively, are successively coated on a glass substrate, by the same method as in the above Example 2. As for materials of targets, ZnO and Ag are used, and sputtering is performed in argon gas atmosphere. The sputtering pressure, the substrate temperature, and the RF power density are the same as in Example 2.

When the obtained Low-E film is checked by X-ray diffraction method, the diffraction angle 2θ (center of gravity position) of (002) diffraction line of ZnO is found to be 33.78°. The internal stress of ZnO film formed under this condition, is 1.5×10^{10} dyne/cm^2.

The Low-E film after the moisture resistance test, have a thin turbidity on the whole area of the surface of samples, and recognizable white spots with diameter of at least 1 mm are clearly observed.

This is the replacement sheet

Date: 19 MAY 1998

According to the same SEM photograph after the moisture resistance test, cracks prevail on the whole area of the surface of the film, which shows considerable destruction of the film.

A glass on which the above Low-E film is deposited, is laminated with another glass plate with a plastic intermediate film therebetween, disposing the Low-E film inside. The same moisture test is carried out also for this laminated glass. As a result, clear white turbidity is observed on the edge of the film after 14 days of the moisture resistance test.

EXAMPLE 6 (COMPARATIVE)

A Low-E film having the composition of $ZnO/SnO_2/ZnO/SnO_2/ZnO/Ag/ZnO/SnO_2/ZnO/SnO_2/ZnO$/glass, is made by using metal targets made of zinc, tin, and silver, respectively, in which the Ag film is made by a direct current sputtering method, in argon atmosphere, and the SnO_2 film and the ZnO film are made by a reactive direct current sputtering method in an atmosphere containing oxygen. The thickness of Ag film is 100 Å and those of ZnO film and SnO_2 film are 90 Å for each layer, respectively. The visible light transmittance of the glass having such Low-E film is 86%, and its emissivity is 0.06.

An acid resistance test was performed on the glass with Low-E film, in which the glass is immersed in 1 N hydrochloric acid. No change is observed until 2 minutes

This is the replacement sheet

Date: 19 MAY 1998

after the immersion. However, after 3 minutes the color of the sample begins to change into brownish color from edge of the film. After 5 minutes a part of the film is observed to be exfoliated.

COMPARATIVE EXAMPLE 2

A Low-E film having the film composition of ZnO/Ag/ZnO/glass is made, by using metal targets made of zinc and silver, respectively, in which the Ag film is made by a direct current sputtering method, in argon atmosphere, and the ZnO film is made by a reactive direct current sputtering method, in a atmosphere containing oxygen. The thickness of the Ag film is 100 Å, and the thickness of the ZnO film is 450 Å. The visible light transmittance of the glass having the Low-E film, is 86%, and its emissivity is 0.06.

An acid resistance test was performed on the glass with Low-E film, in which the glass is immersed in 1 N hydrochloric acid. The film begins to be exfoliated just after the immersion, and after 5 minutes, the Low-E film is totally exfoliated from the glass, and vanished.

In the Low-E film of this invention, the moisture resistance and the acid resistance are significantly improved. Accordingly, the handling of the glass with such Low-E film on single plate, is likely to become easy. Furthermore, the possibility of the preservation of such glass in single plate for a long time in a room, is realized. Furthermore the reliability of the Low-E

This is the replacement sheet

Date: 19 MAY 1998

glass for an automobile or for a building, is promoted. When the film is used in a laminated glass, the glass is not deteriorated by the moisture contained in an intermediate film, which improves the durability of the laminated glass for an automobile or for a building.

The Low-E film of this invention is electrically conductive, for it is comprising the metal layer. Therefore the Low-E film of the present invention can be used in various technical fields, for example, as an electrode in electronics field, or as a heating element for electrically heated window, or as an electromagnetic shielding film for a window or for electronics use. In some cases, the Low-E film of the present invention can be applied on a substrate with various functioning layers therebetween, in which case the optical property of this Low-E film can be adjusted depending on each purpose by choosing suitable film thickness for each layer comprised in the Low-E film of the present invention.

This is the replacement sheet
Date: 19 MAY 1998

CLAIMS:

1 . A low emissivity film which comprises:

a substrate; and

a coating of oxide and metallic films alternately formed on the substrate in a total of (2n+1) layers where n is an integer being equal to or more than 1, with an innermost layer thereof being an oxide film,

wherein the oxide film (B) formed on the outer side of the metallic film (A) being most apart from the substrate, is a single layer film or a multi-layer film having at least a film whose major component is hexagonal zinc oxide; and

a value of a diffraction angle 2θ (center of gravity position) of (002) diffraction line of the hexagonal zinc oxide of the low emissivity film in X-ray diffraction method using CuKα radiation, is not smaller than 33.88° and not larger than 35.00°.

2. The low emissivity film according to Claim 1 , wherein the value of the diffraction angle 2θ (center of gravity position) of (002) diffraction line of the hexagonal zinc oxide in x-ray diffraction method using CuKα radiation is not smaller than 34.00° and not larger than 34.88°.

3. The low emissivity film according to Claim 1, wherein the metallic film (A) is a metallic film whose major component is Ag.

4. The low emissivity film according to Claim 1, wherein the outermost layer of said oxide film (B) is a layer for controlling the adhesive strength thereof with a plastic intermediate film for lamination with another substrate.

This is the replacement sheet

Date: 19 MAY 1998

A LOW EMISSIVITY FILM

ABSTRACT

A low emissivity film which comprises:

a substrate; and

a coating of oxide and metallic films alternately formed on the substrate in a total of (2n+1) layers where n is an integer being equal to or more than 1, with an innermost layer thereof being an oxide film,

wherein the oxide film (B) formed on the outer side of the metallic film (A) being most apart from the substrate, is a single layer film or a multi-layer film having at least a film whose major component is hexagonal zinc oxide; and

a value of a diffraction angle 2θ (center of gravity position) of (002) diffraction line of the hexagonal zinc oxide of the low emissivity film in X-ray diffraction method using CuKα radiation, is not smaller than 33.88° and not larger than 35.00°.

FIGURE 1B

This is the replacement sheet
19 MAY 1998
Date:

FIGURE 1

a

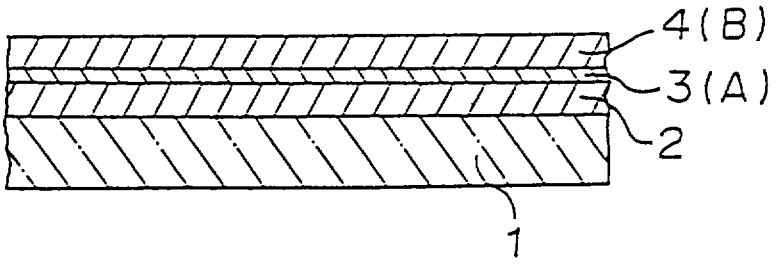

b

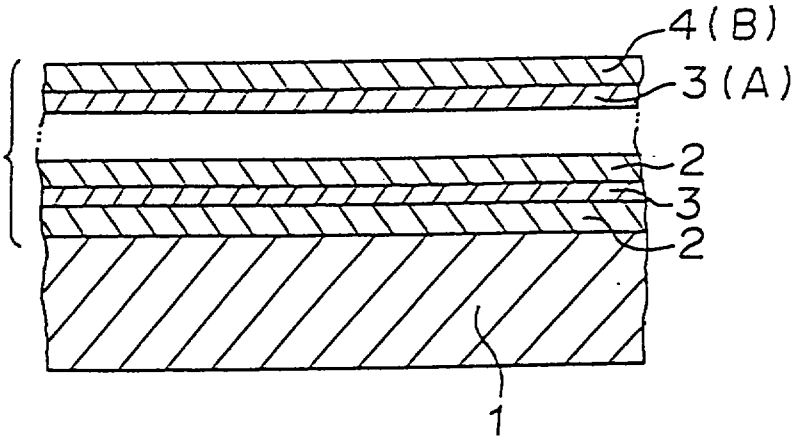

This is the replacement sheet

Date: 19 MAY 1998

REPLACEMENT SHEET
11 MAR 1999

A LOW EMISSIVITY FILM

This invention relates to a low emissivity film which is excellent in durability, especially in moisture resistance or in acid resistance.

A film composed of (2n+1) layers ($n \geq 1$) such as a film composed of three layers in which an oxide film, an Ag film, and an oxide film are successively coated on a surface of a substrate, or a film composed of five layers in which an oxide film, an Ag film, an oxide film, an Ag film, and an oxide film are successively coated on a surface of a substrate, is a heat reflective film called Low-E (Low-Emissivity) film. A glass in which such a Low-E film is formed, is called a Low-E glass. This glass can prevent lowering of room temperature by reflecting the thermal infrared radiation emitted from within the heated room, which is used mainly in cold district on the purpose of decreasing heating load. Furthermore, since this glass has a heat insulating effect of the solar radiation energy, it is adopted in a windshield of an automobile. Since this glass is