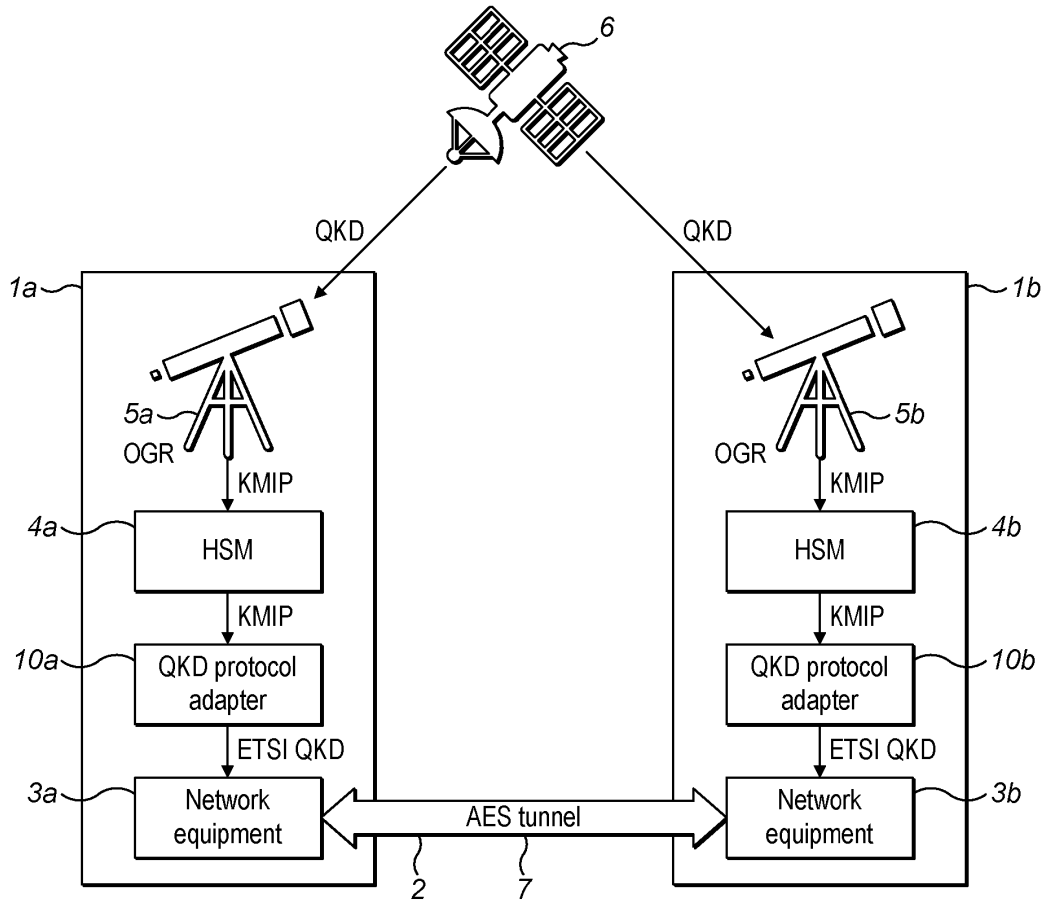
6
QKD
QKD
1a
1b
5a
OGR
KMIP
5b
OGR
KMIP
4a
HSM
KMIP
4b
HSM
KMIP
10a
QKD protocol adapter
ETSI QKD
10b
QKD protocol adapter
ETSI QKD
3a
Network equipment
AES tunnel
Network equipment
3b
2
7

FIG. 1

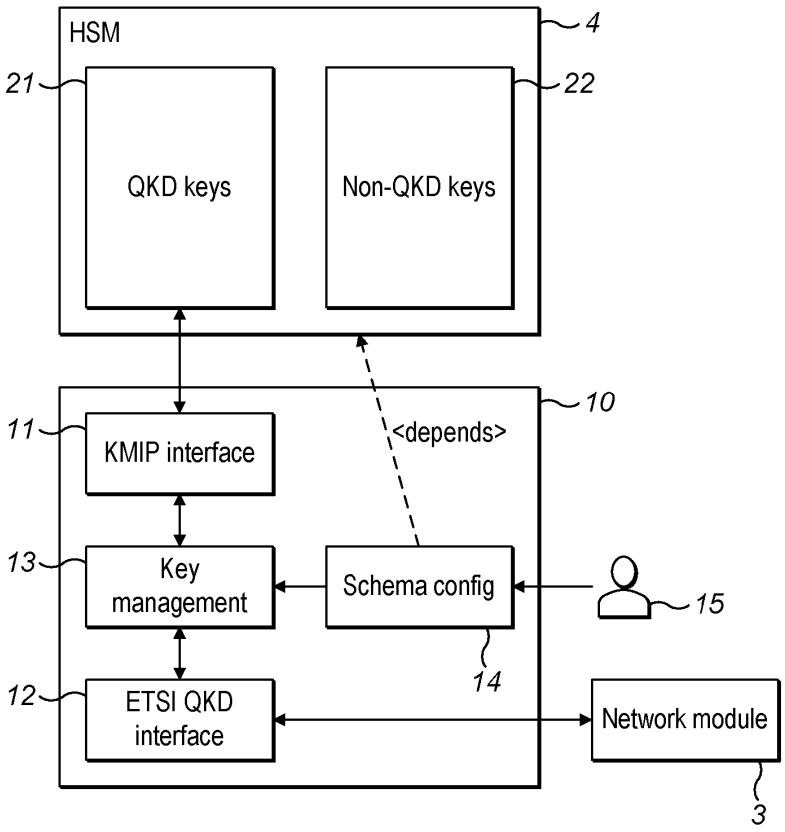
HSM
4
21
22
QKD keys
Non-QKD keys
10
11
KMIP interface
<depends>
13
Key management
Schema config
15
14
12
ETSI QKD interface
Network module
3

FIG. 2

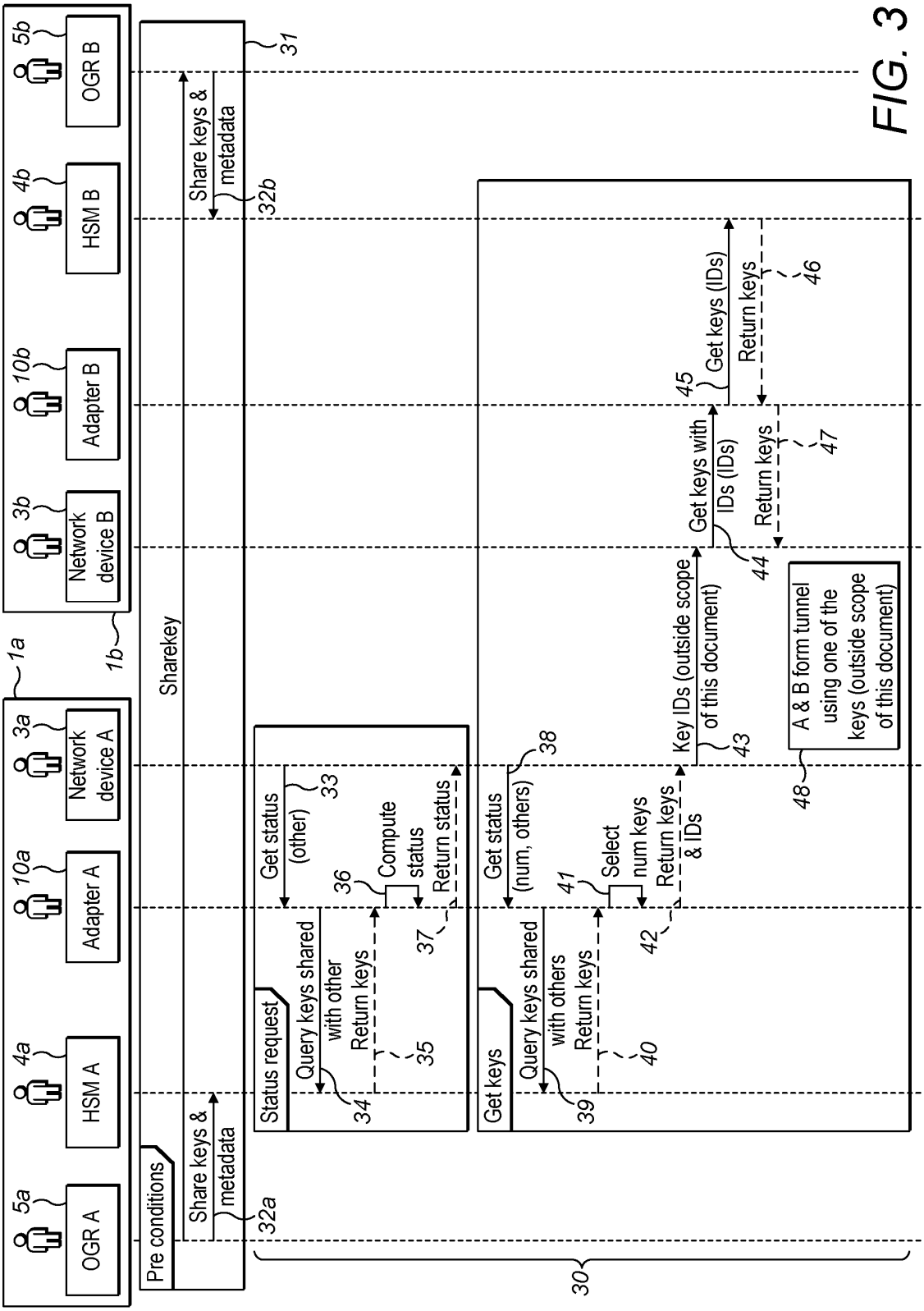
OGR A
HSM A
Adapter A
Network device A
Network device B
Adapter B
HSM B
OGR B
1a
1b
Sharekey
Pre conditions
Share keys & metadata
Share keys & metadata
Status request
Query keys shared with other
Return keys
Get status (other)
Compute status
Return status
Get keys
Query keys shared with others
Return keys
Get status (num, others)
Select num keys
Return keys & IDs
Key IDs (outside scope of this document)
Get keys with IDs (IDs)
Return keys
Get keys (IDs)
Return keys
A & B form tunnel using one of the keys (outside scope of this document)
30
31
32a
32b
33
34
35
36
37
38
39
40
41
42
43
44
45
46
47
48

FIG. 3

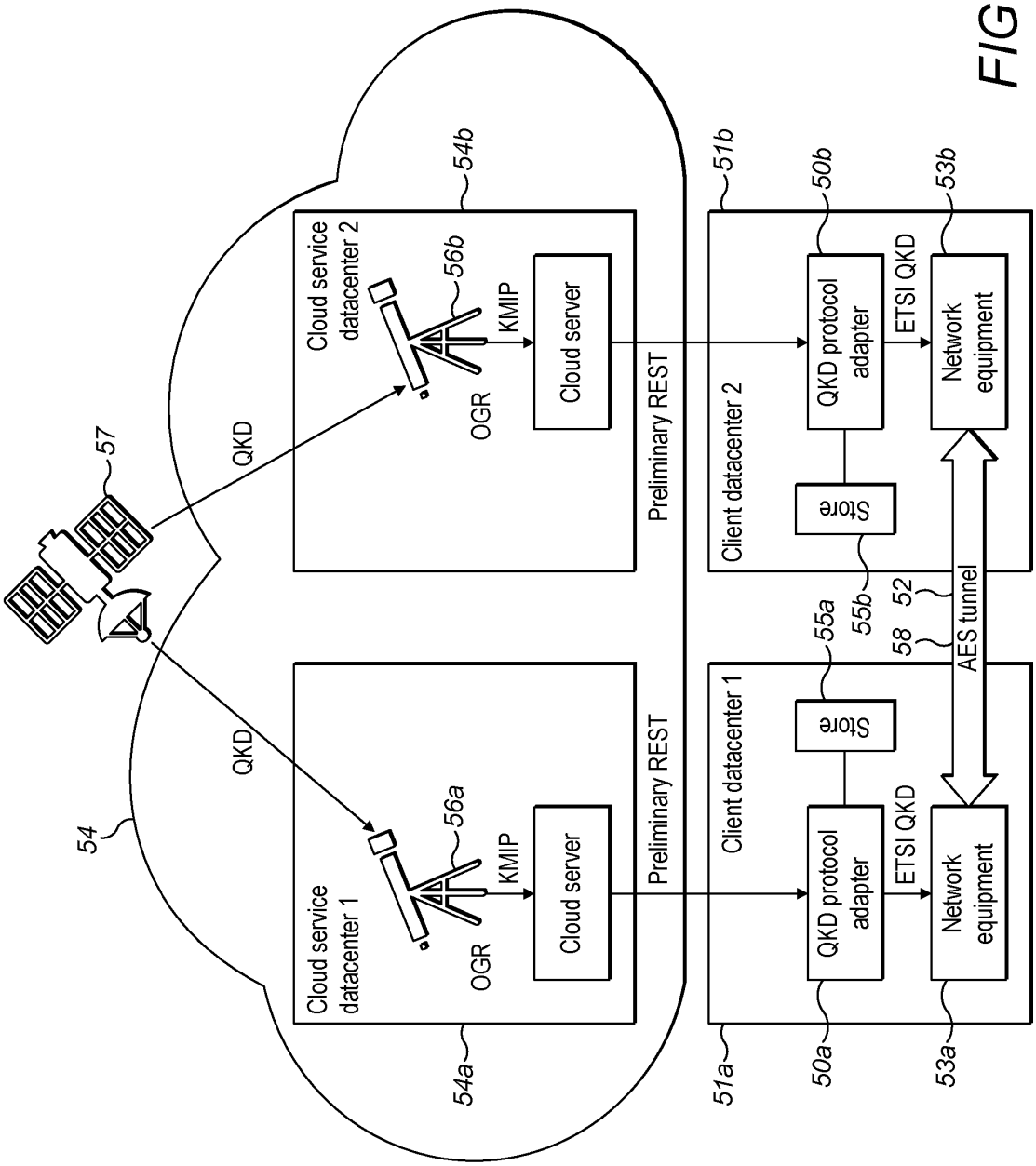
54
57
QKD
QKD
Cloud service datacenter 1
56a
OGR
KMIP
Cloud server
54a
Cloud service datacenter 2
56b
OGR
KMIP
Cloud server
54b
Preliminary REST
Preliminary REST
Client datacenter 1
Store
55a
QKD protocol adapter
ETSI QKD
Network equipment
51a
50a
53a
Client datacenter 2
Store
55b
QKD protocol adapter
ETSI QKD
Network equipment
51b
50b
53b
58
52
AES tunnel

FIG. 4

FIG. 5

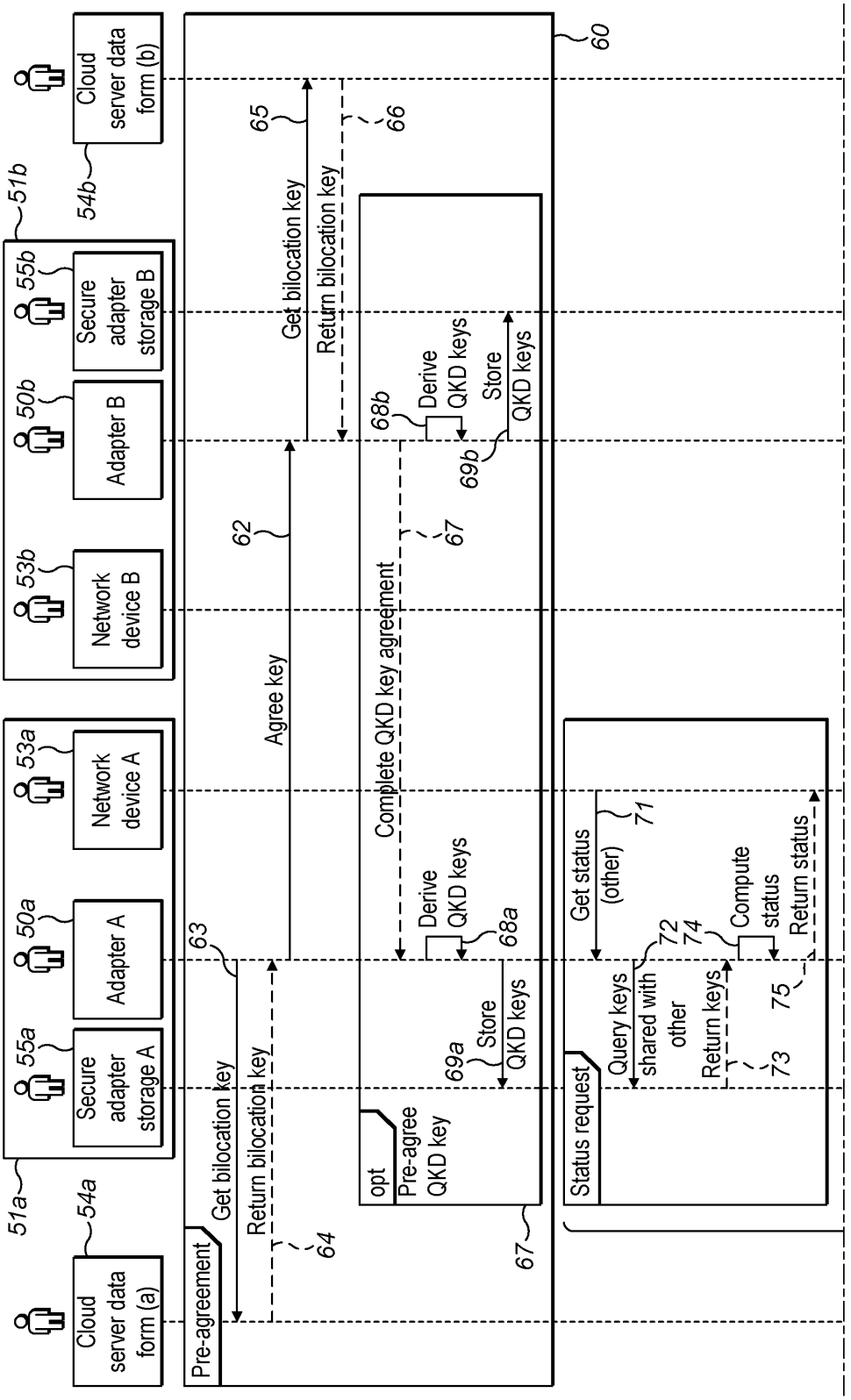
Cloud server data form (a)
Cloud server data form (b)
Secure adapter storage A
Adapter A
Network device A
Network device B
Adapter B
Secure adapter storage B
51a
54a
51b
54b
55a
50a
53a
53b
50b
55b
60
Pre-agreement
Get bilocation key
Return bilocation key
Agree key
Complete QKD key agreement
Get bilocation key
Return bilocation key
Derive QKD keys
Store QKD keys
Derive QKD keys
Store QKD keys
opt
Pre-agree QKD key
Status request
Get status (other)
Query keys shared with other
Return keys
Compute status
Return status
63
64
62
67
65
66
68b
69b
68a
69a
71
72
73
74
75

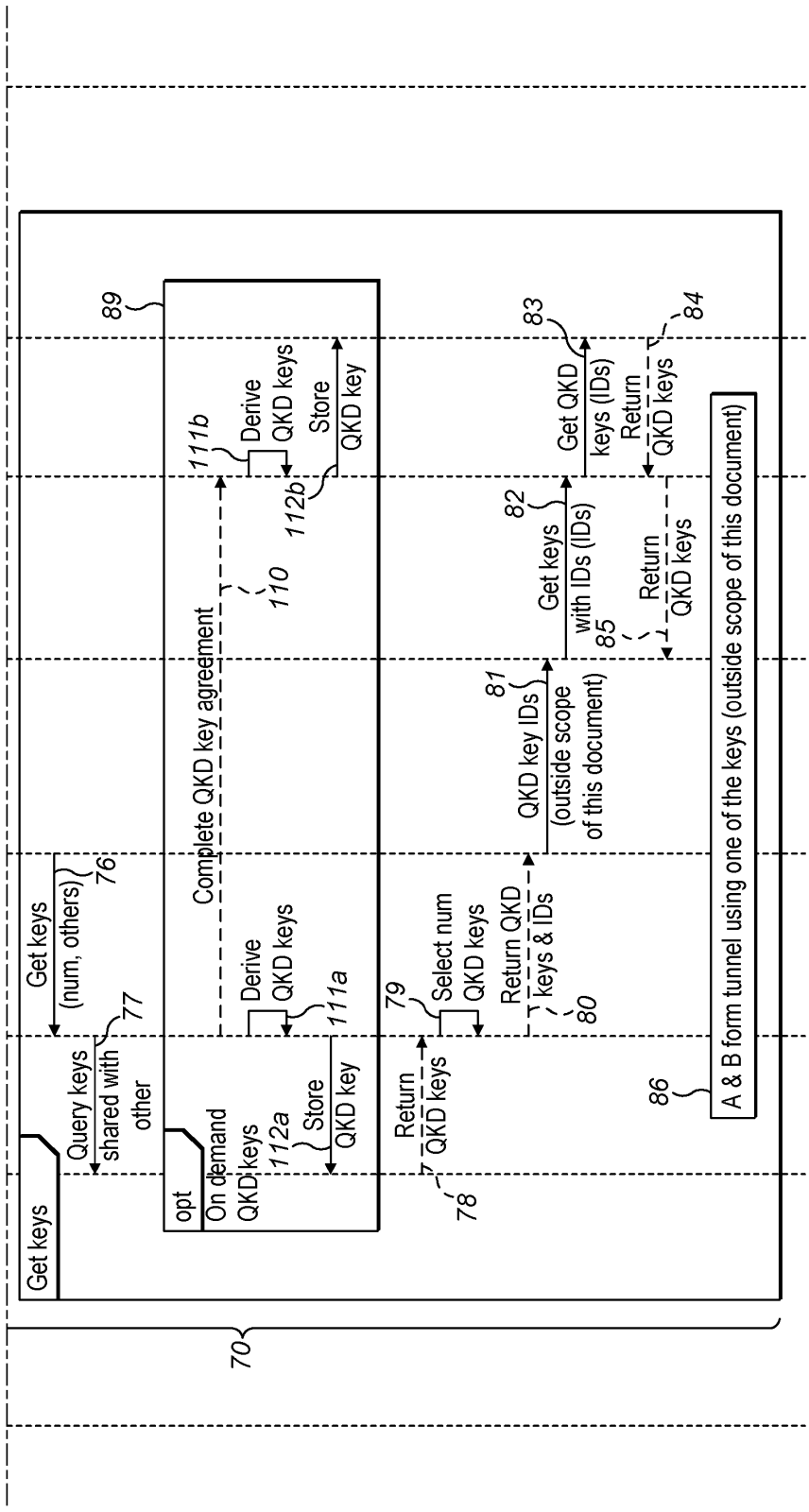
Get keys
Query keys shared with other
Get keys (num, others)
opt
On demand QKD keys
Store QKD key
112a
Derive QKD keys
111a
Complete QKD key agreement
110
Derive QKD keys
111b
Store QKD key
112b
Return QKD keys
78
Select num QKD keys
79
Return QKD keys & IDs
80
QKD key IDs (outside scope of this document)
81
Get keys with IDs (IDs)
82
Return QKD keys
85
Get QKD keys (IDs)
83
Return QKD keys
84
A & B form tunnel using one of the keys (outside scope of this document)
86
89
76
77
70

FIG. 5 Cont'd

FIG. 6

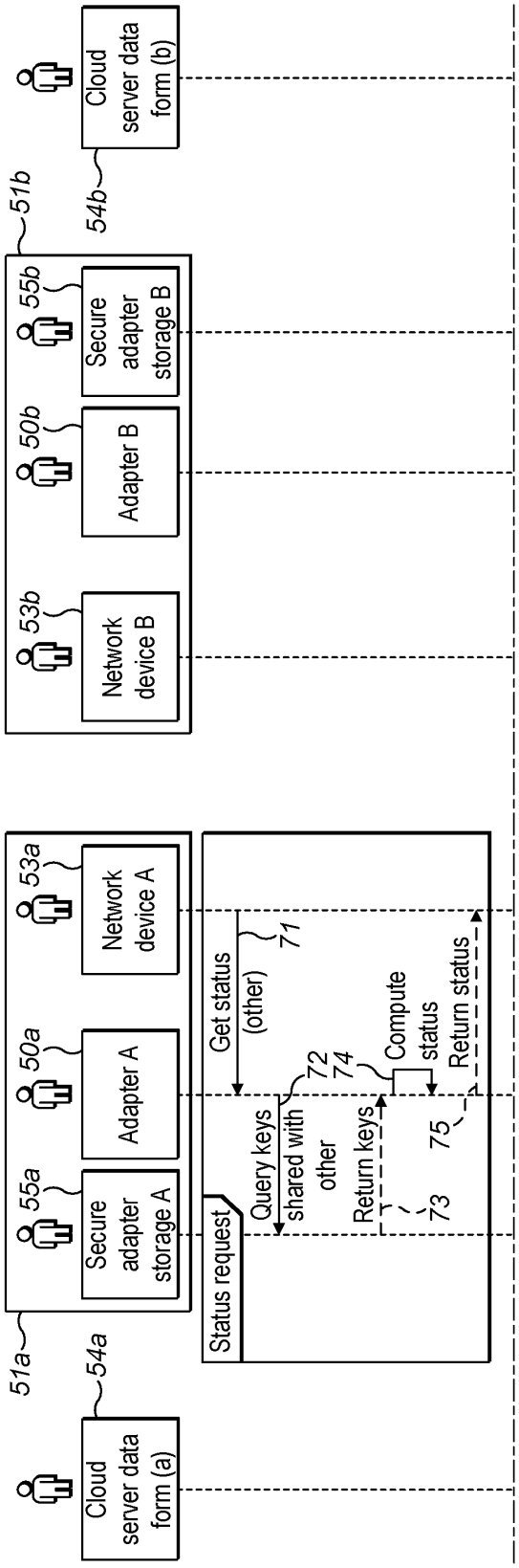
Cloud server data form (a)
54a
51a
Secure adapter storage A
55a
Adapter A
50a
Network device A
53a
Network device B
53b
Adapter B
50b
Secure adapter storage B
55b
51b
54b
Cloud server data form (b)
Status request
Query keys shared with other
Return keys
73
Get status (other)
71
72
74
Compute status
75
Return status

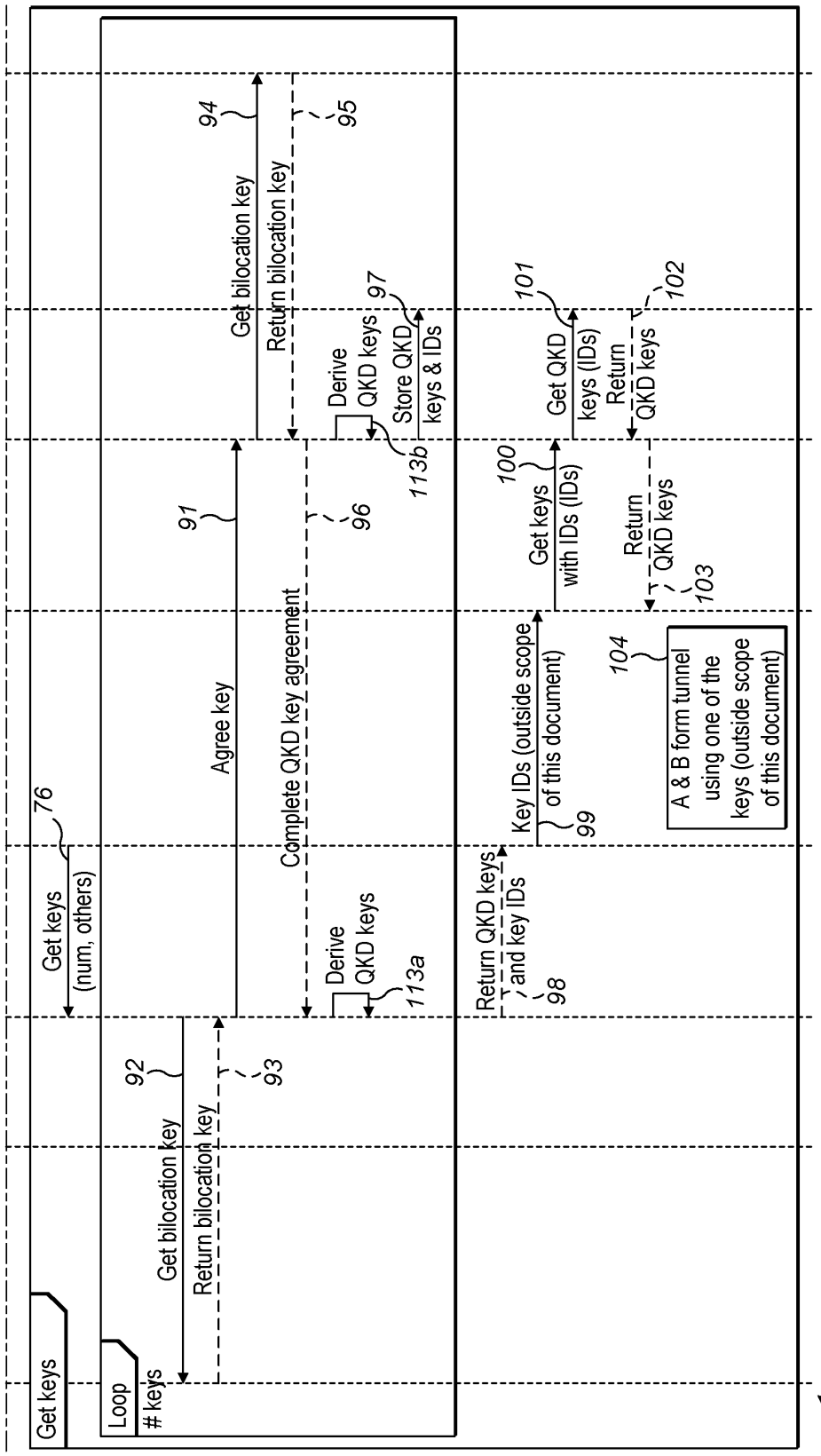
Get keys
Loop
keys
Get keys
(num, others)
76
Get bilocation key
92
Return bilocation key
93
Agree key
91
Complete QKD key agreement
Derive
QKD keys
113a
Return QKD keys
and key IDs
98
Key IDs (outside scope
of this document)
99
Get keys
with IDs (IDs)
100
A & B form tunnel
using one of the
keys (outside scope
of this document)
104
Return
QKD keys
103
Get bilocation key
94
Return bilocation key
95
Derive
QKD keys
96
Store QKD
keys & IDs
97
113b
Get QKD
keys (IDs)
101
Return
QKD keys
102
90

FIG. 6 Cont'd

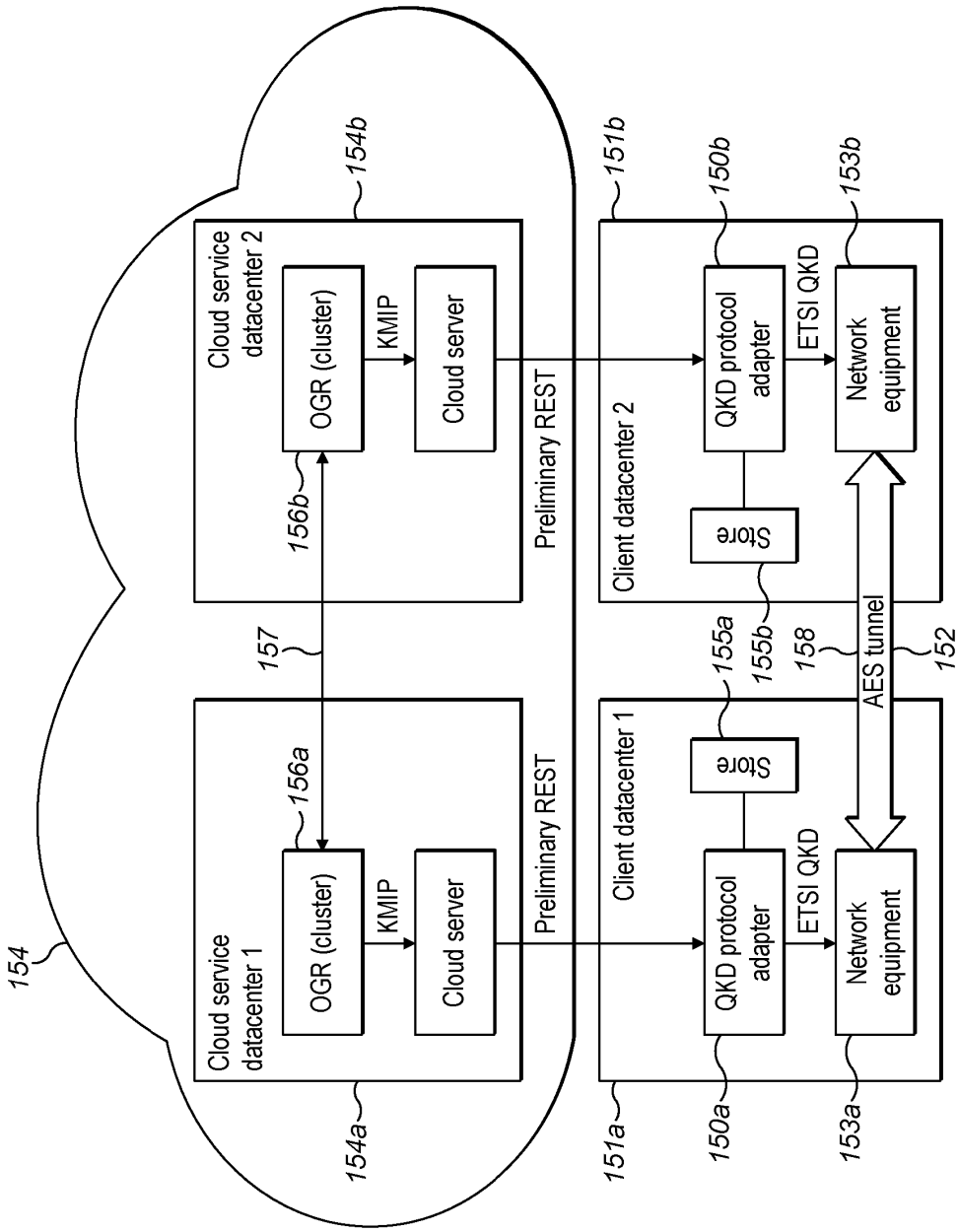
154
Cloud service datacenter 1
OGR (cluster)
KMIP
Cloud server
154a
156a
Cloud service datacenter 2
OGR (cluster)
KMIP
Cloud server
154b
156b
157
Preliminary REST
Preliminary REST
Client datacenter 1
Store
QKD protocol adapter
ETSI QKD
Network equipment
151a
150a
153a
155a
155b
Client datacenter 2
Store
QKD protocol adapter
ETSI QKD
Network equipment
151b
150b
153b
158
AES tunnel
152

FIG. 7