(12) INTERNATIONAL APPLICATION PUBLISHED UNDER THE PATENT COOPERATION TREATY (PCT)

(19) World Intellectual Property Organization
International Bureau

(43) International Publication Date
8 August 2002 (08.08.2002)

PCT

(10) International Publication Number
WO 2002/061723 A3

(51) International Patent Classification[7]: G09G 3/36

(21) International Application Number:
PCT/IB2002/000252

(22) International Filing Date: 28 January 2002 (28.01.2002)

(25) Filing Language: English

(26) Publication Language: English

(30) Priority Data:
2001-027509 2 February 2001 (02.02.2001) JP

(71) Applicant: **KONINKLIJKE PHILIPS ELECTRONICS N.V.** [NL/NL]; Groenewoudseweg 1, NL-5621 BA Eindhoven (NL).

(72) Inventor: **INADA, Toshiya**; Prof. Holstlaan 6, NL-5656 AA Eindhoven (NL).

(74) Agent: **RAAP, Adriaan, Y.**; Internationaal Octrooibureau B.V., Prof. Holstlaan 6, NL-5656 AA Eindhoven (NL).

(81) Designated States *(national)*: AE, AG, AL, AM, AT, AU, AZ, BA, BB, BG, BR, BY, BZ, CA, CH, CN, CO, CR, CU, CZ, DE, DK, DM, DZ, EC, EE, ES, FI, GB, GD, GE, GH, GM, HR, HU, ID, IL, IN, IS, JP, KE, KG, KP, KR, KZ, LC, LK, LR, LS, LT, LU, LV, MA, MD, MG, MK, MN, MW, MX, MZ, NO, NZ, OM, PH, PL, PT, RO, RU, SD, SE, SG, SI, SK, SL, TJ, TM, TN, TR, TT, TZ, UA, UG, UZ, VN, YU, ZA, ZM, ZW.

(84) Designated States *(regional)*: ARIPO patent (GH, GM, KE, LS, MW, MZ, SD, SL, SZ, TZ, UG, ZM, ZW), Eurasian patent (AM, AZ, BY, KG, KZ, MD, RU, TJ, TM), European patent (AT, BE, CH, CY, DE, DK, ES, FI, FR, GB, GR, IE, IT, LU, MC, NL, PT, SE, TR), OAPI patent (BF, BJ, CF, CG, CI, CM, GA, GN, GQ, GW, ML, MR, NE, SN, TD, TG).

Published:
— *with international search report*

[Continued on next page]

(54) Title: DISPLAY DEVICE

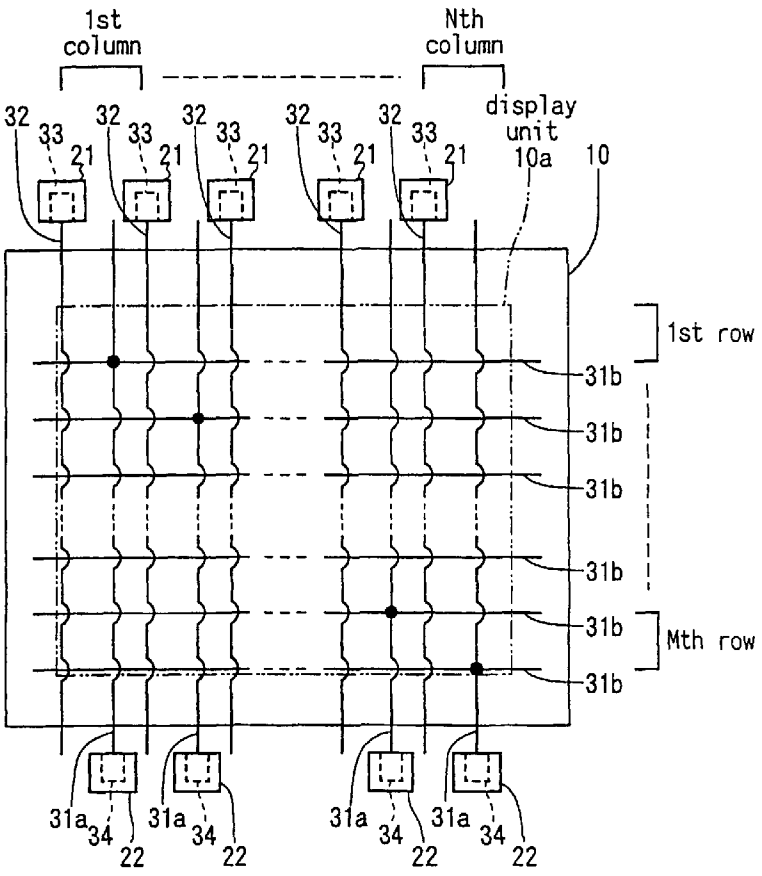

(57) Abstract: In an active matrix LCD, a group of gate lines are formed with input wires (31a) and drive wires (31b), both wires being electrically connected each other. The input wires (31a) extend in the vertical direction which is the same as the data lines (32), while the drive wires (31b) extend in the horizontal direction. Thus, electrical connections between the data lines (32) and the data line IC chip (21), and electrical connections between the gate lines (31a, 31b) and the gate line IC chip (22) are provided at the top and the bottom of the display device, respectively, with the liquid crystal panel 10 being interposed therebetween. As a result, the device can be realized in which a width in the horizontal direction is narrower than the conventional device.

WO 2002/061723 A3

(88) Date of publication of the international search report:
5 February 2004

For two-letter codes and other abbreviations, refer to the "Guidance Notes on Codes and Abbreviations" appearing at the beginning of each regular issue of the PCT Gazette.