(12) INTERNATIONAL APPLICATION PUBLISHED UNDER THE PATENT COOPERATION TREATY (PCT)

(19) World Intellectual Property Organization
International Bureau

(43) International Publication Date
5 February 2004 (05.02.2004)

PCT

(10) International Publication Number
WO 2004/011181 A2

(51) International Patent Classification[7]: B23K

(21) International Application Number: PCT/US2003/019878

(22) International Filing Date: 25 July 2003 (25.07.2003)

(25) Filing Language: English

(26) Publication Language: English

(30) Priority Data:
60/398,100 25 July 2002 (25.07.2002) US

(71) Applicant *(for all designated States except US)*: **ARKANSAS STATE UNIVERSITY** [US/US]; P.O. 2760, State University, AR 72467 (US).

(72) Inventors; and
(75) Inventors/Applicants *(for US only)*: **ALLEN, Susan, Davis** [US/US]; Arkansas State Univeristy, P.O. Box 179, State University, AR 72467 (US). **KUDRYASHOV, Sergey, I.** [RU/US]; Arkansas State Univeristy, P.O. Box 419, State University, AR 72467 (US).

(74) Agents: **FLESHNER, Mark L.** et al.; Fleshner & Kim, LLP, P.O. Box 221200, Chantilly, VA 20153-1200 (US).

(81) Designated States *(national)*: AE, AG, AL, AM, AT, AU, AZ, BA, BB, BG, BR, BY, BZ, CA, CH, CN, CO, CR, CU, CZ, DE, DK, DM, DZ, EC, EE, ES, FI, GB, GD, GE, GH, GM, HR, HU, ID, IL, IN, IS, JP, KE, KG, KP, KR, KZ, LC, LK, LR, LS, LT, LU, LV, MA, MD, MG, MK, MN, MW, MX, MZ, NI, NO, NZ, OM, PG, PH, PL, PT, RO, RU, SC, SD, SE, SG, SK, SL, SY, TJ, TM, TN, TR, TT, TZ, UA, UG, US, UZ, VC, VN, YU, ZA, ZM, ZW.

(84) Designated States *(regional)*: ARIPO patent (GH, GM, KE, LS, MW, MZ, SD, SL, SZ, TZ, UG, ZM, ZW), Eurasian patent (AM, AZ, BY, KG, KZ, MD, RU, TJ, TM), European patent (AT, BE, BG, CH, CY, CZ, DE, DK, EE,

[Continued on next page]

(54) Title: METHOD AND APPARATUS FOR REMOVING MINUTE PARTICLE(S) FROM A SURFACE

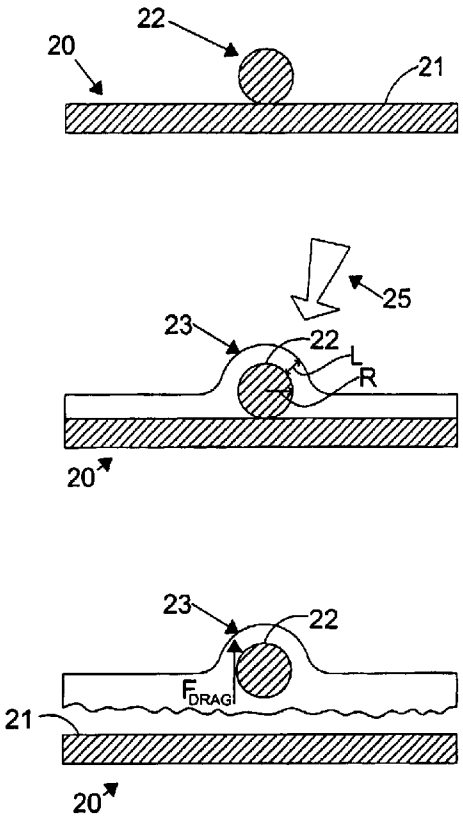

(57) Abstract: Methods and apparatus for removing minute particle(s) from a substrate. The methods include arranging an energy transfer medium having a predetermined thickness under and around one or more particle(s) to be removed, and irradiating the energy transfer medium and/or the surface of the substrate with pulsed energy, wherein the predetermined thickness of the energy transfer medium is selected so that viscous and other drag forces within the energy transfer medium are sufficient to cause the one or more particle(s) to be removed from the surface of the substrate. The apparatus include a tailored energy transfer medium application unit configured to control application of an energy transfer medium onto the surface of a substrate, and a tailored energy source that irradiates the energy transfer medium and/or the substrate with a tailored energy pulse or pulses, wherein the energy transfer medium application unit controls application of the energy transfer medium in accordance with a dimension of at least one of the particle(s).

WO 2004/011181 A2

ES, FI, FR, GB, GR, HU, IE, IT, LU, MC, NL, PT, RO, SE, SI, SK, TR), OAPI patent (BF, BJ, CF, CG, CI, CM, GA, GN, GQ, GW, ML, MR, NE, SN, TD, TG).

Published:

— *without international search report and to be republished upon receipt of that report*

For two-letter codes and other abbreviations, refer to the "Guidance Notes on Codes and Abbreviations" appearing at the beginning of each regular issue of the PCT Gazette.