FIG. 1

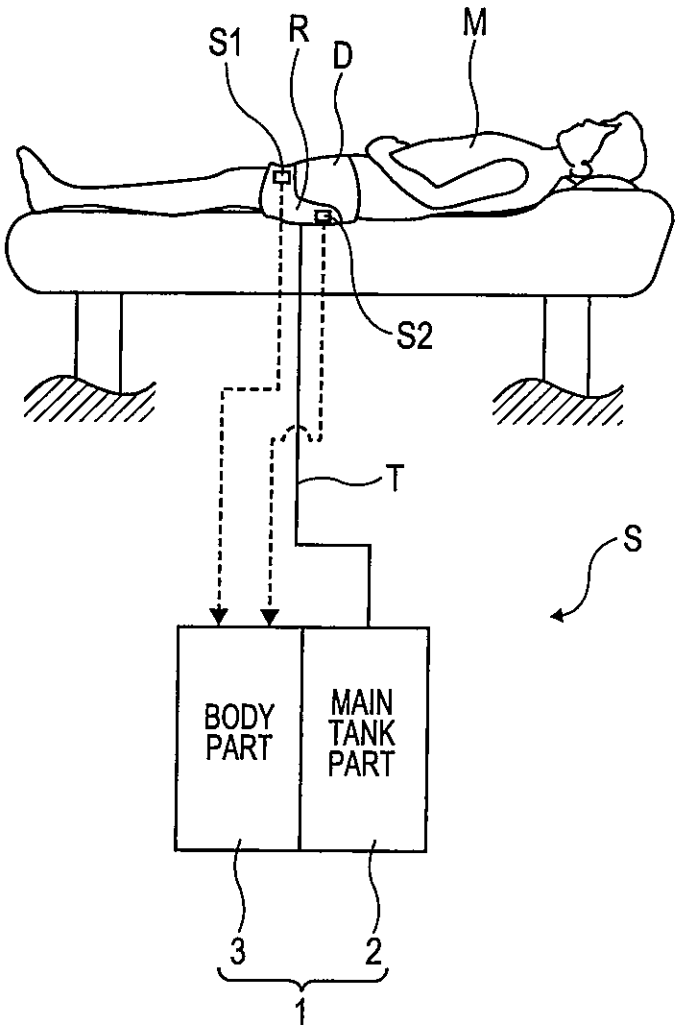

FIG. 2

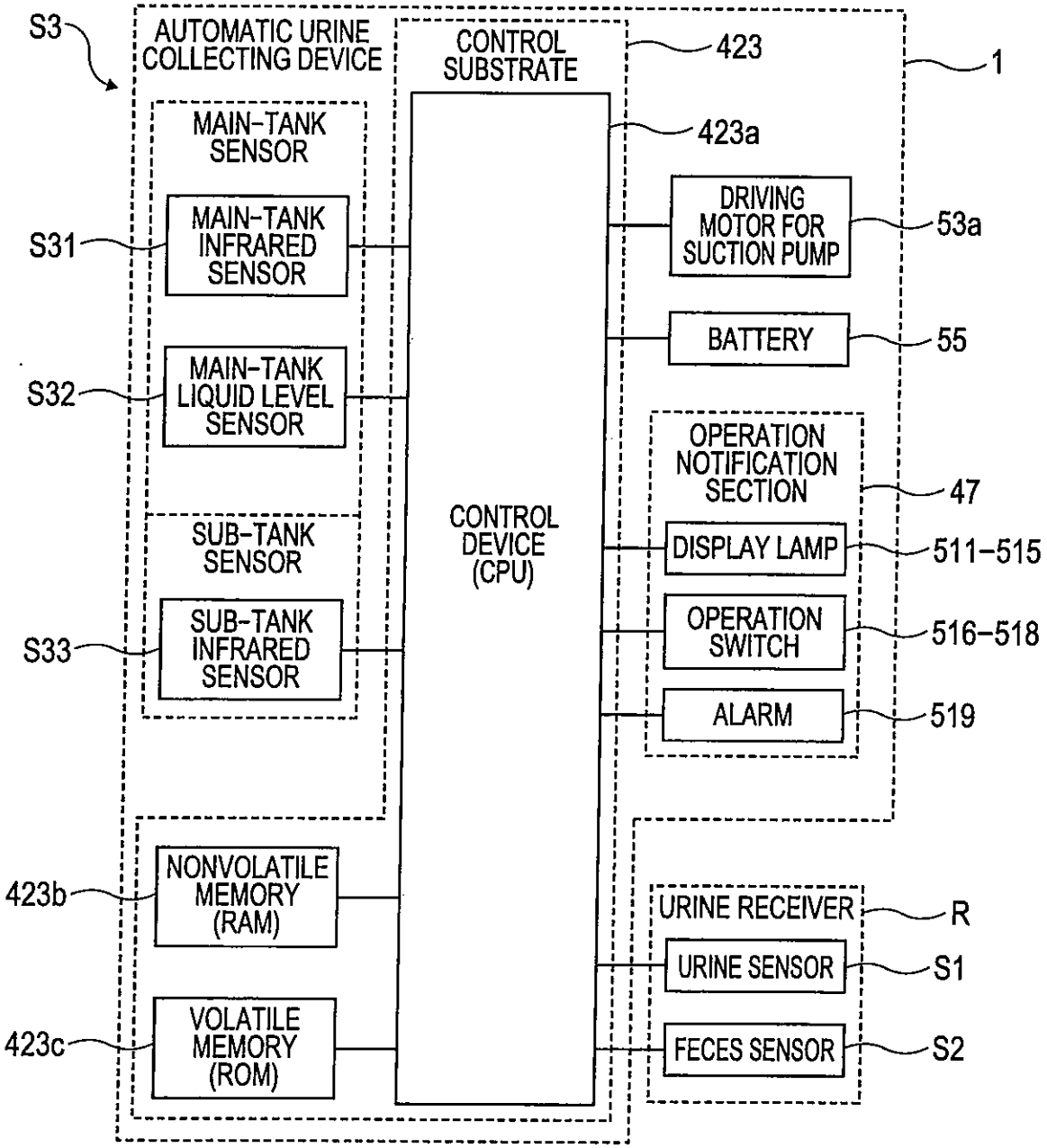
S3
AUTOMATIC URINE COLLECTING DEVICE
CONTROL SUBSTRATE
423
1
MAIN-TANK SENSOR
423a
MAIN-TANK INFRARED SENSOR
S31
DRIVING MOTOR FOR SUCTION PUMP
53a
BATTERY
55
MAIN-TANK LIQUID LEVEL SENSOR
S32
OPERATION NOTIFICATION SECTION
47
SUB-TANK SENSOR
CONTROL DEVICE (CPU)
DISPLAY LAMP
511–515
SUB-TANK INFRARED SENSOR
S33
OPERATION SWITCH
516–518
ALARM
519
NONVOLATILE MEMORY (RAM)
423b
URINE RECEIVER
R
URINE SENSOR
S1
VOLATILE MEMORY (ROM)
423c
FECES SENSOR
S2

FIG. 3

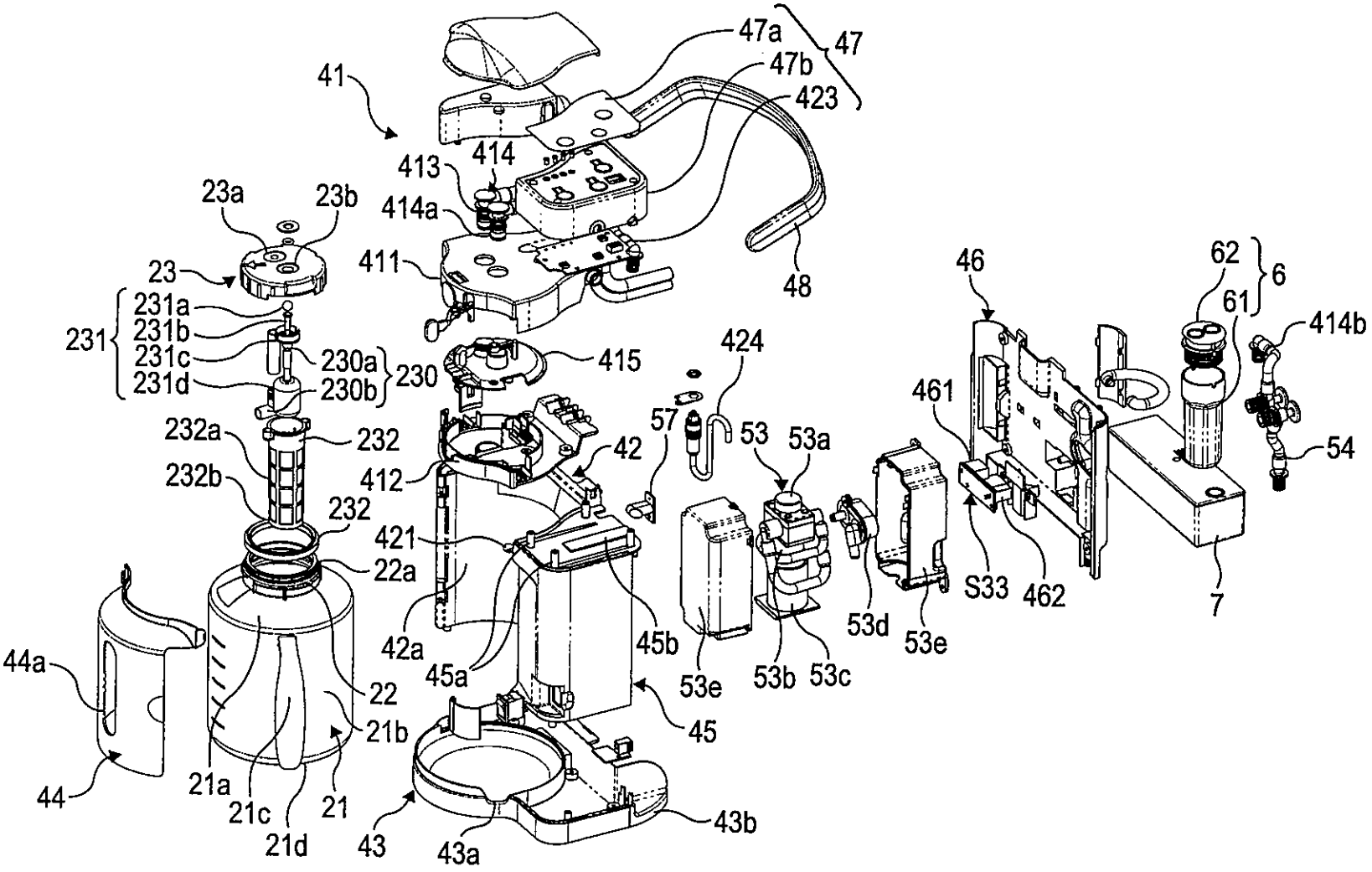
41
47a
47
47b
423
413
414
414a
411
48
23a
23b
23
231a
231b
231c
231d
231
230a
230b
230
415
424
46
62
6
61
414b
461
54
232a
232
232b
232
57
53
53a
42
412
421
22a
42a
45a
45b
53e
53b
53c
53d
53e
S33
462
7
44a
22
21b
45
44
21a
21c
21d
21
43
43a
43b

FIG. 4

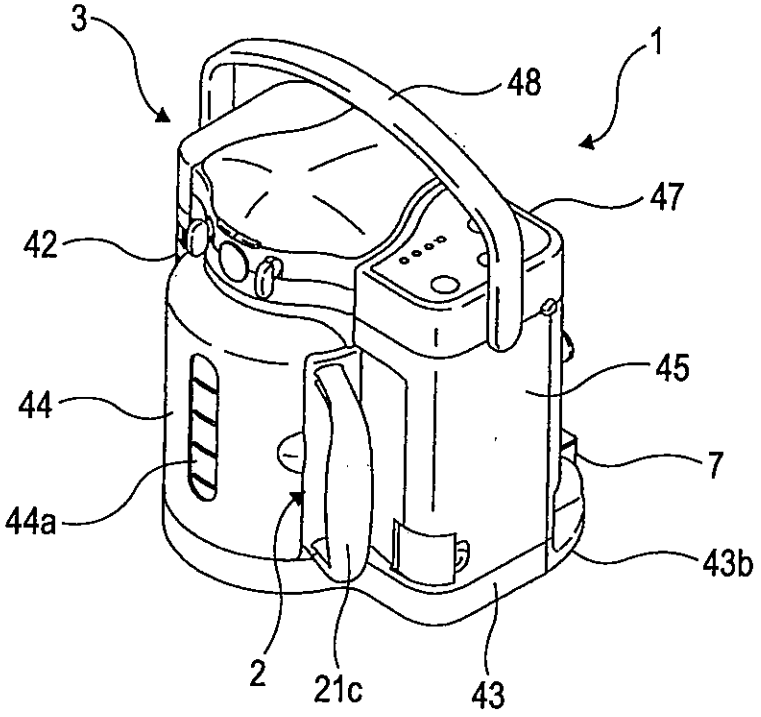

FIG. 5

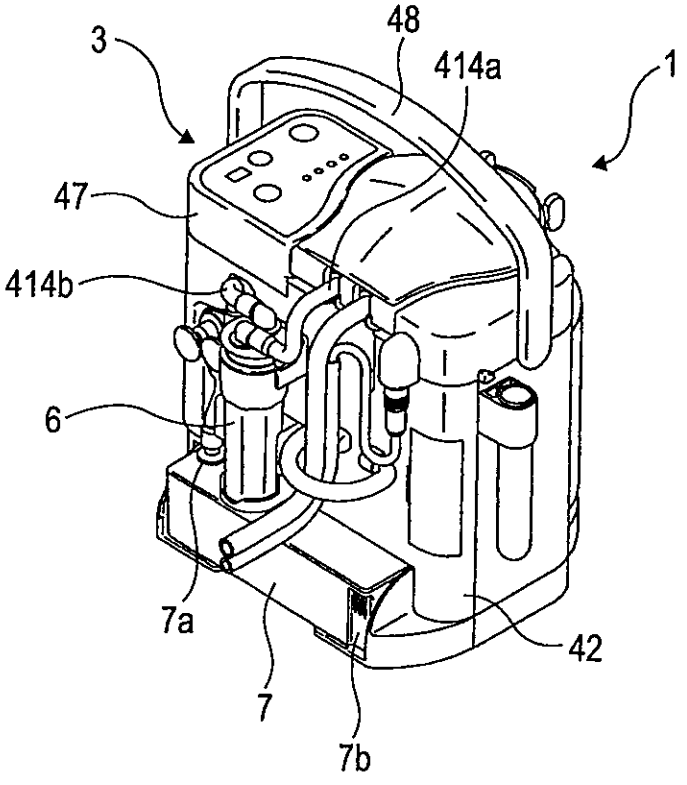

FIG. 6

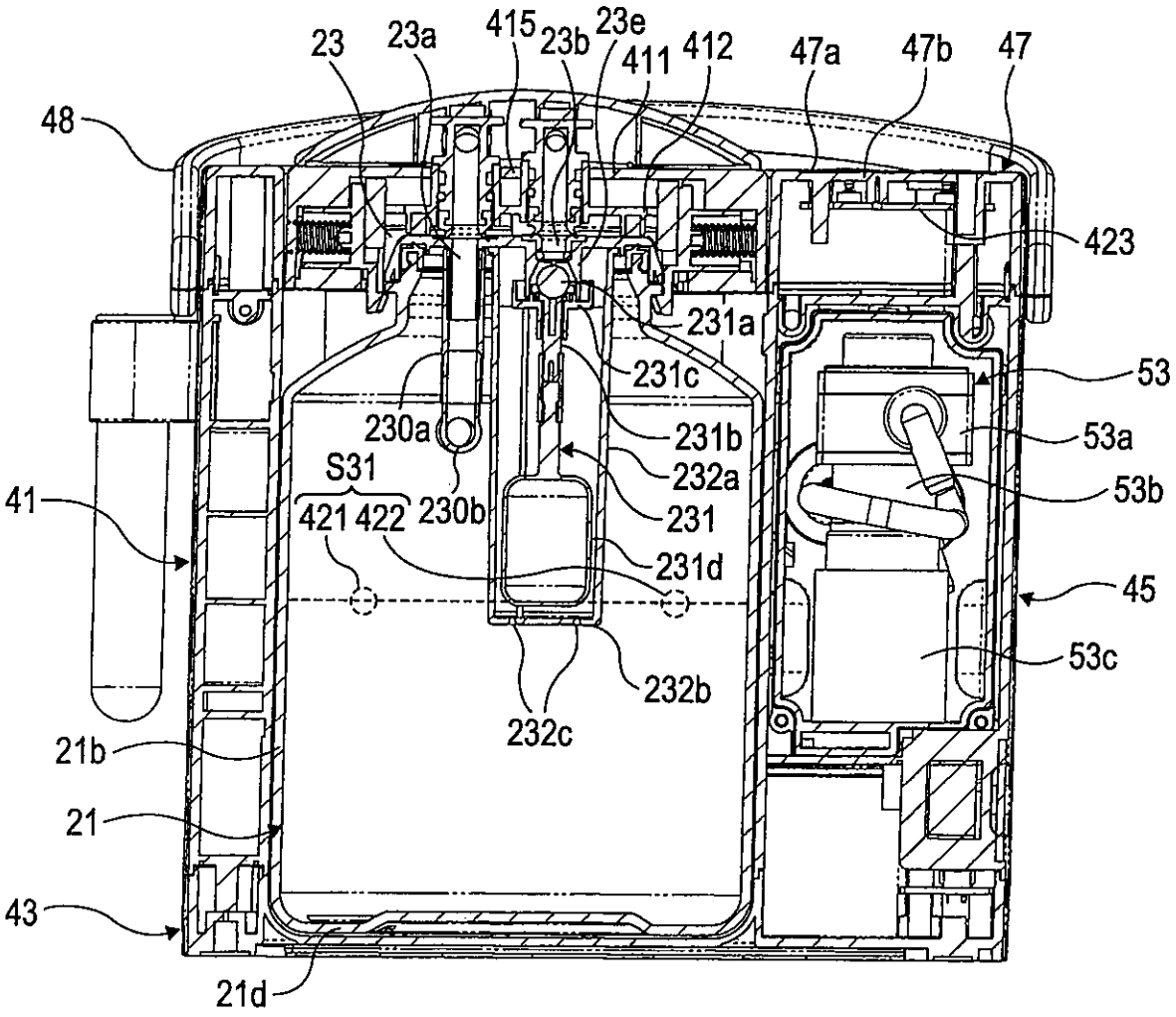
23
23a
415
23b
23e
411
412
47a
47b
47
48
423
231a
231c
53
230a
231b
53a
S31
232a
53b
41
421
422
230b
231
231d
45
53c
232b
232c
21b
21
43
21d

FIG. 7

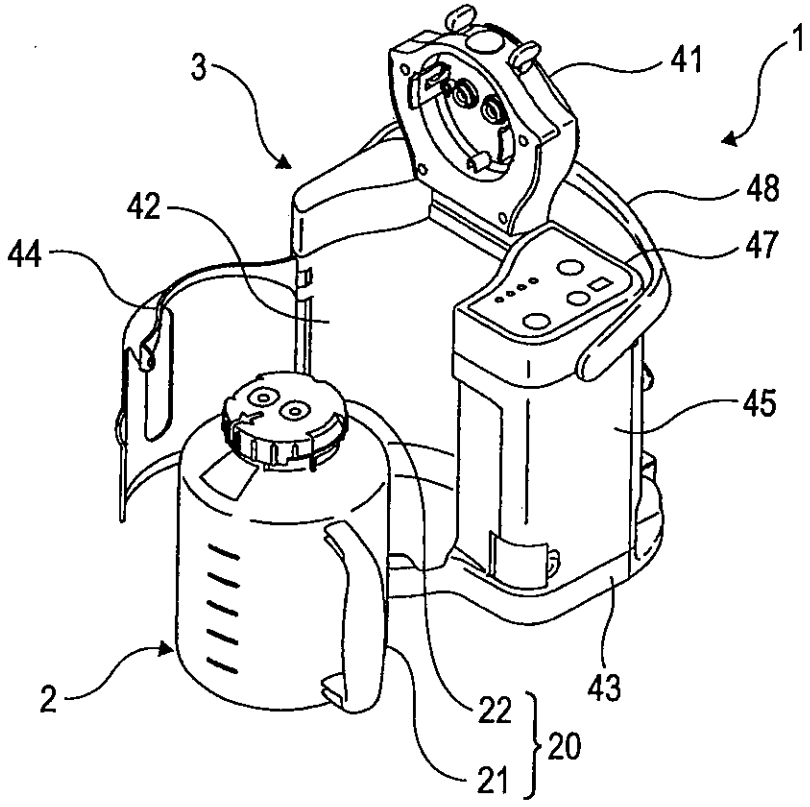

FIG. 8

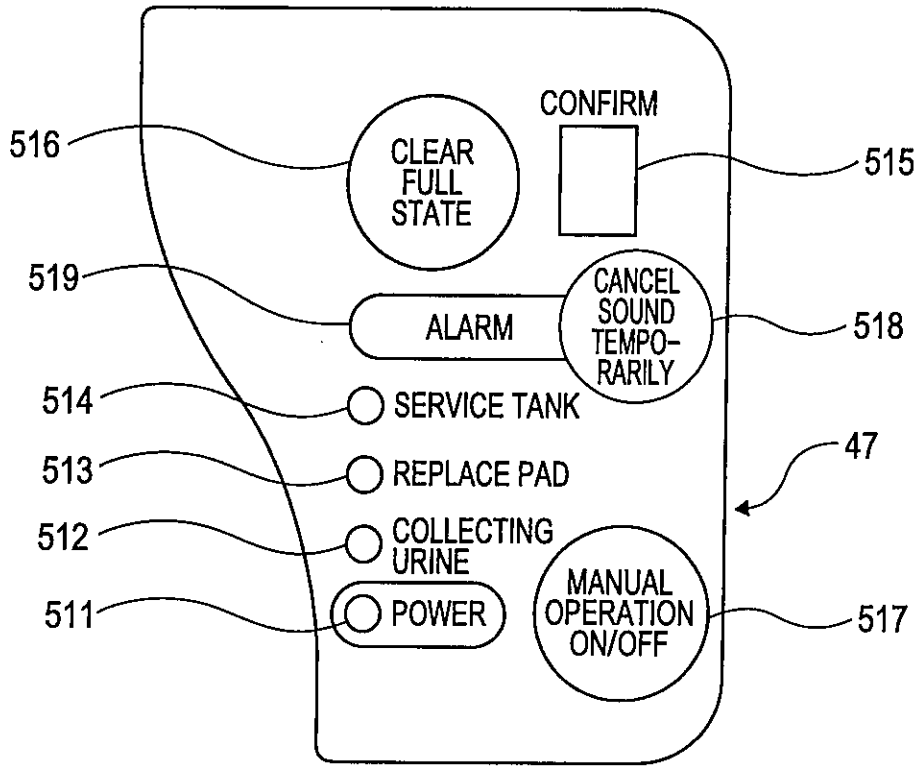
CONFIRM
516
CLEAR FULL STATE
515
519
ALARM
CANCEL SOUND TEMPO-RARILY
518
514
SERVICE TANK
513
REPLACE PAD
47
512
COLLECTING URINE
511
POWER
MANUAL OPERATION ON/OFF
517

FIG. 9

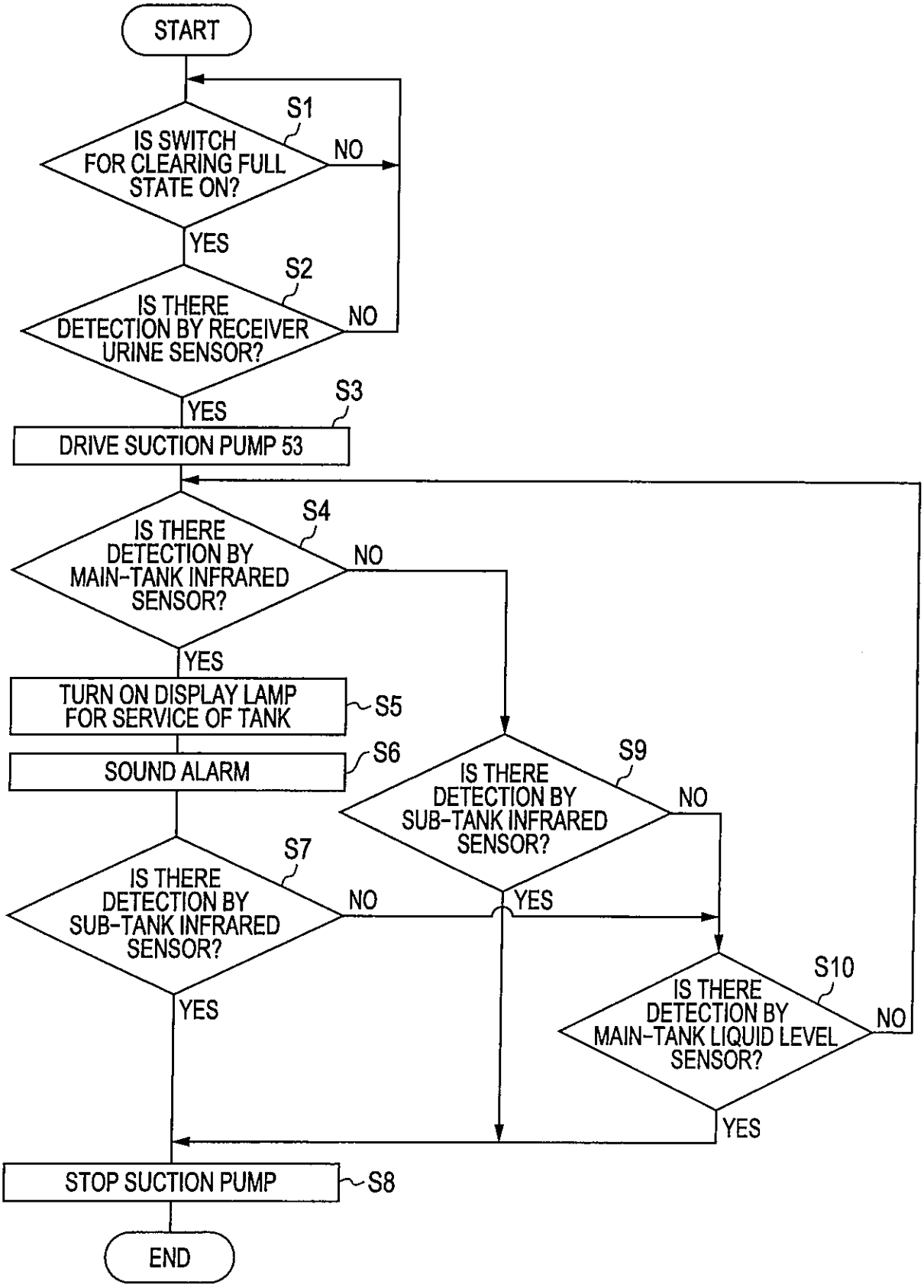
START
S1
IS SWITCH FOR CLEARING FULL STATE ON?
NO
YES
S2
IS THERE DETECTION BY RECEIVER URINE SENSOR?
NO
YES
S3
DRIVE SUCTION PUMP 53
S4
IS THERE DETECTION BY MAIN-TANK INFRARED SENSOR?
NO
YES
TURN ON DISPLAY LAMP FOR SERVICE OF TANK
S5
SOUND ALARM
S6
S9
IS THERE DETECTION BY SUB-TANK INFRARED SENSOR?
NO
YES
S7
IS THERE DETECTION BY SUB-TANK INFRARED SENSOR?
NO
YES
S10
IS THERE DETECTION BY MAIN-TANK LIQUID LEVEL SENSOR?
NO
YES
STOP SUCTION PUMP
S8
END