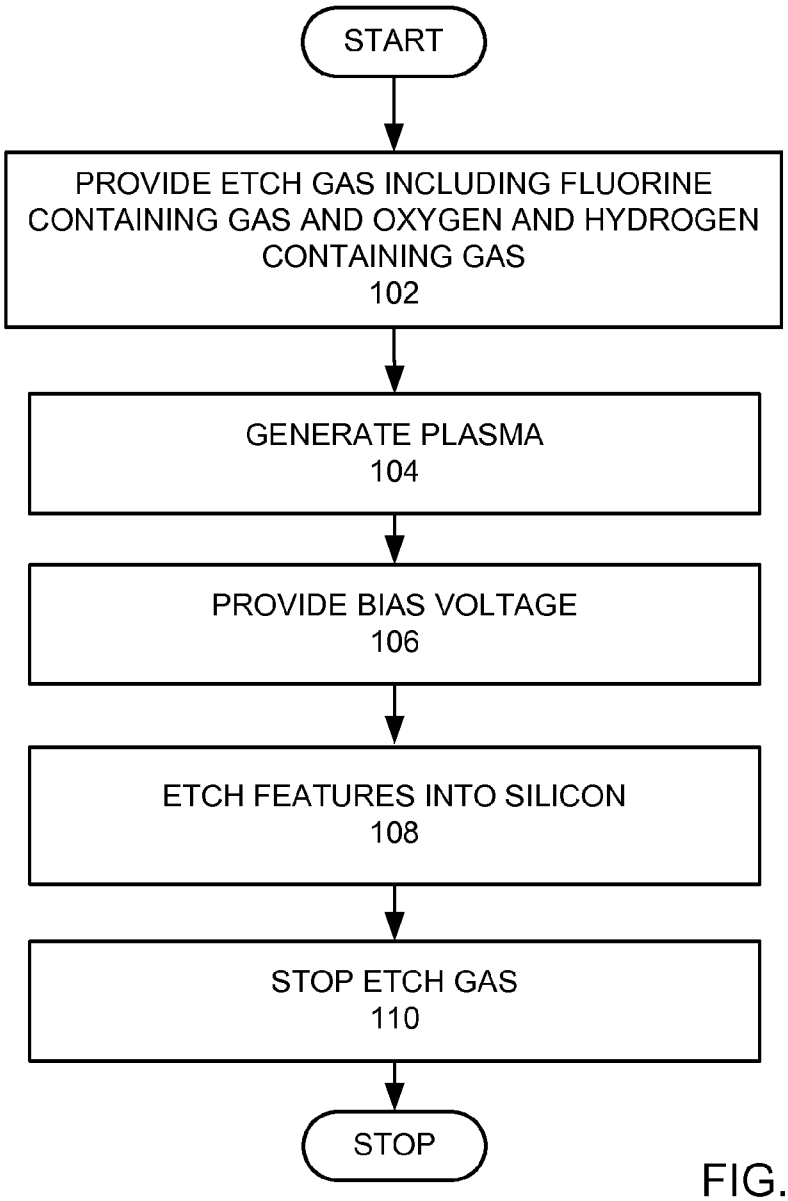
START
PROVIDE ETCH GAS INCLUDING FLUORINE CONTAINING GAS AND OXYGEN AND HYDROGEN CONTAINING GAS
102
GENERATE PLASMA
104
PROVIDE BIAS VOLTAGE
106
ETCH FEATURES INTO SILICON
108
STOP ETCH GAS
110
STOP

FIG. 1

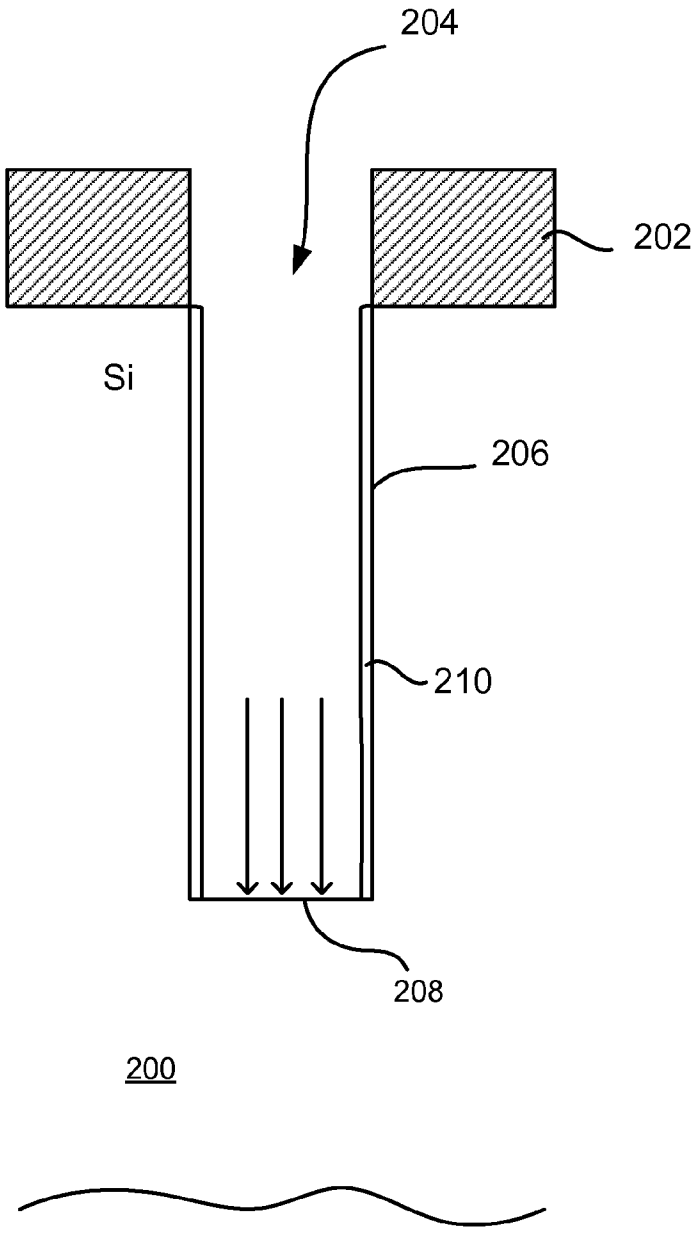

FIG. 2

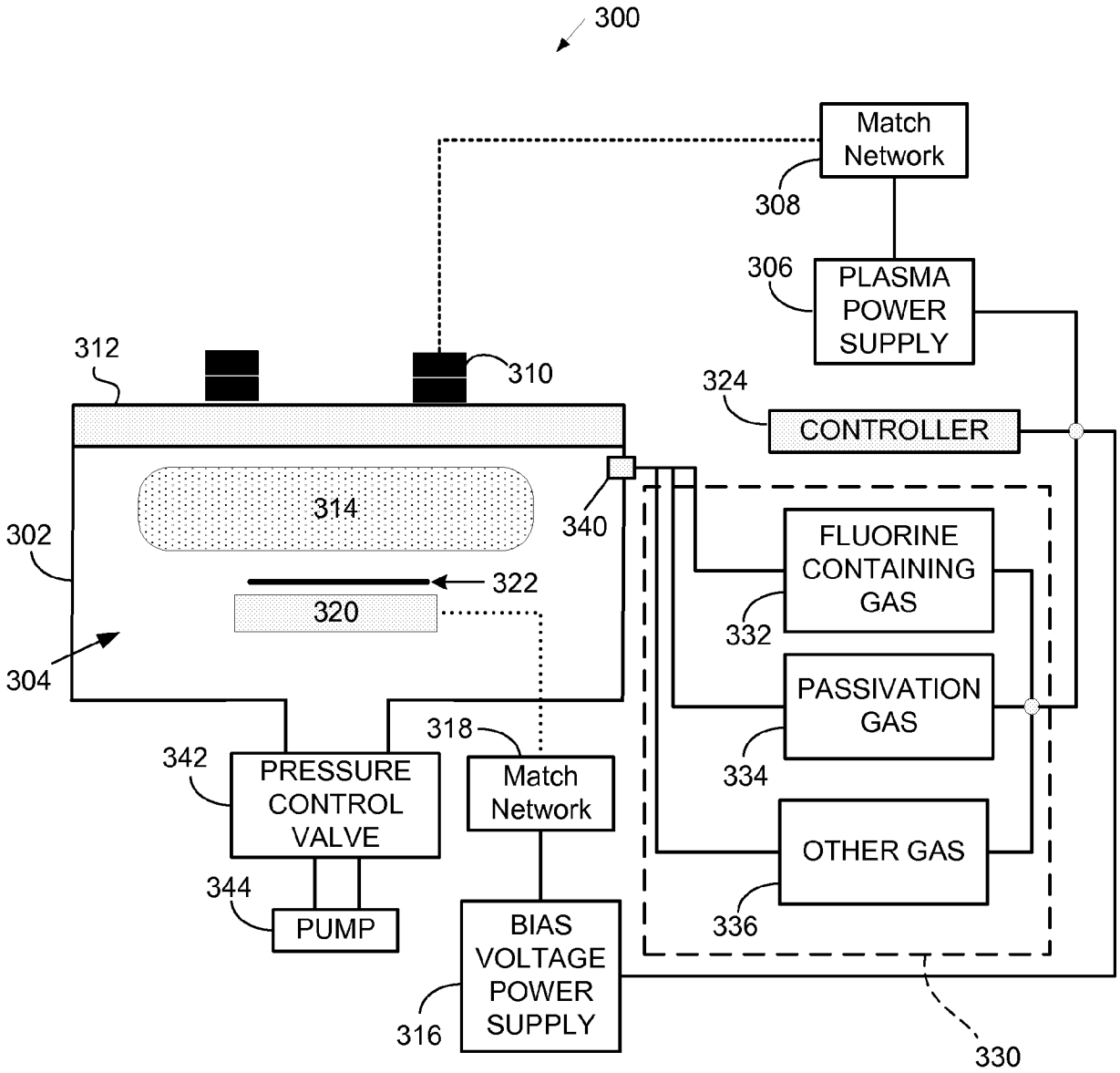
300
Match Network
308
306
PLASMA POWER SUPPLY
312
310
324
CONTROLLER
314
340
302
FLUORINE CONTAINING GAS
322
320
332
304
PASSIVATION GAS
318
342
PRESSURE CONTROL VALVE
Match Network
334
OTHER GAS
344
PUMP
336
BIAS VOLTAGE POWER SUPPLY
316
330

FIG. 3

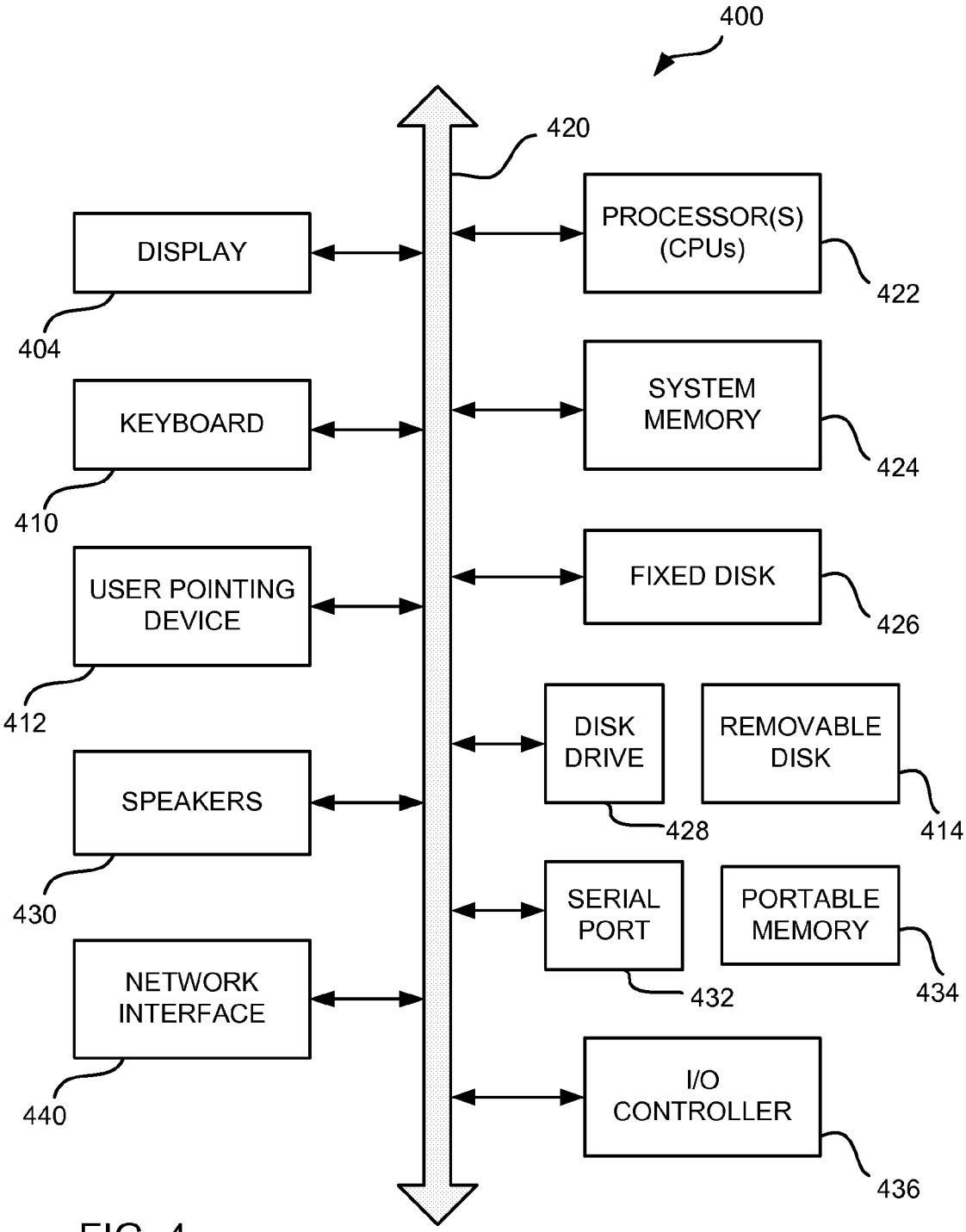
400
420
DISPLAY
404
KEYBOARD
410
USER POINTING DEVICE
412
SPEAKERS
430
NETWORK INTERFACE
440
PROCESSOR(S) (CPUs)
422
SYSTEM MEMORY
424
FIXED DISK
426
DISK DRIVE
428
REMOVABLE DISK
414
SERIAL PORT
432
PORTABLE MEMORY
434
I/O CONTROLLER
436

FIG. 4

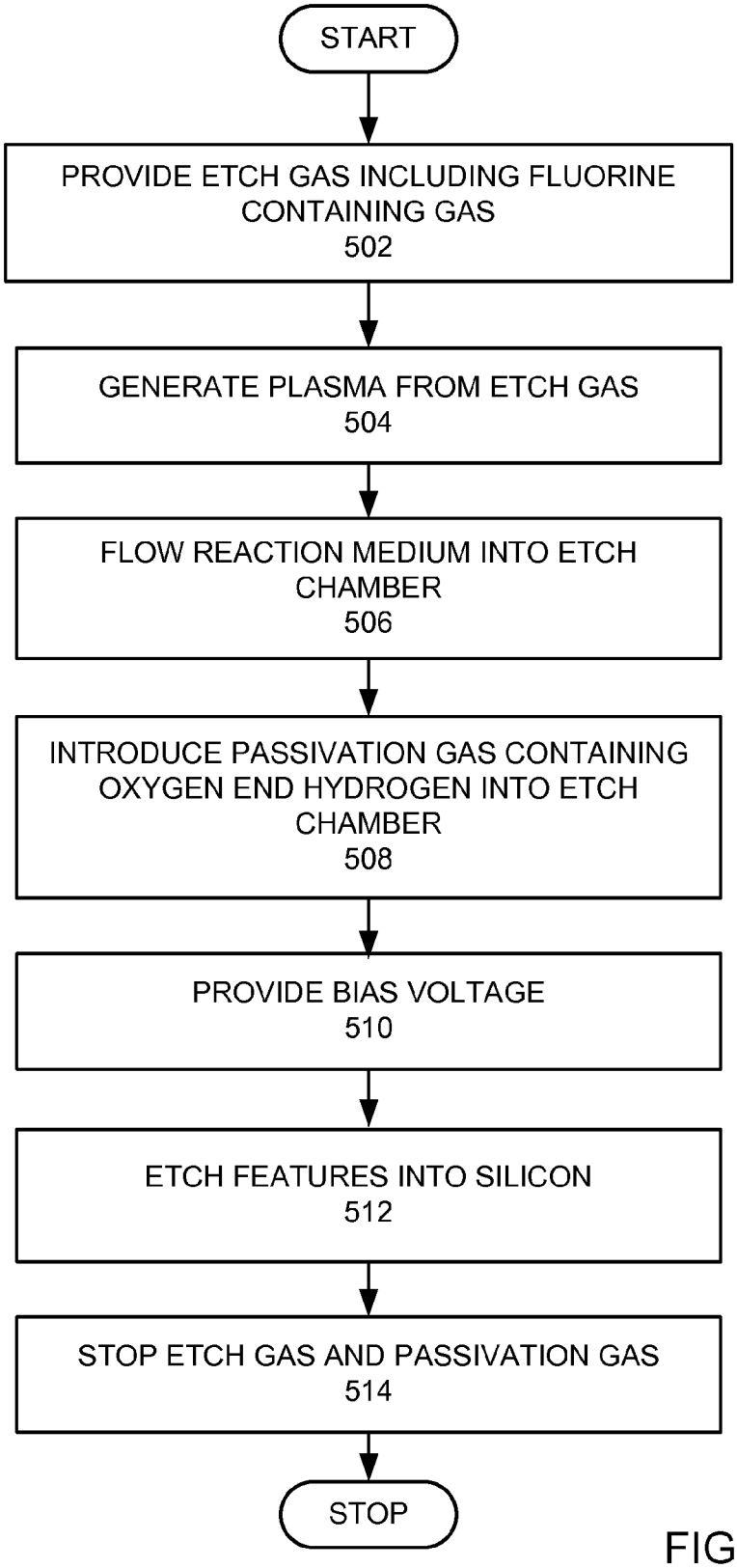
START
PROVIDE ETCH GAS INCLUDING FLUORINE CONTAINING GAS
502
GENERATE PLASMA FROM ETCH GAS
504
FLOW REACTION MEDIUM INTO ETCH CHAMBER
506
INTRODUCE PASSIVATION GAS CONTAINING OXYGEN END HYDROGEN INTO ETCH CHAMBER
508
PROVIDE BIAS VOLTAGE
510
ETCH FEATURES INTO SILICON
512
STOP ETCH GAS AND PASSIVATION GAS
514
STOP

FIG. 5

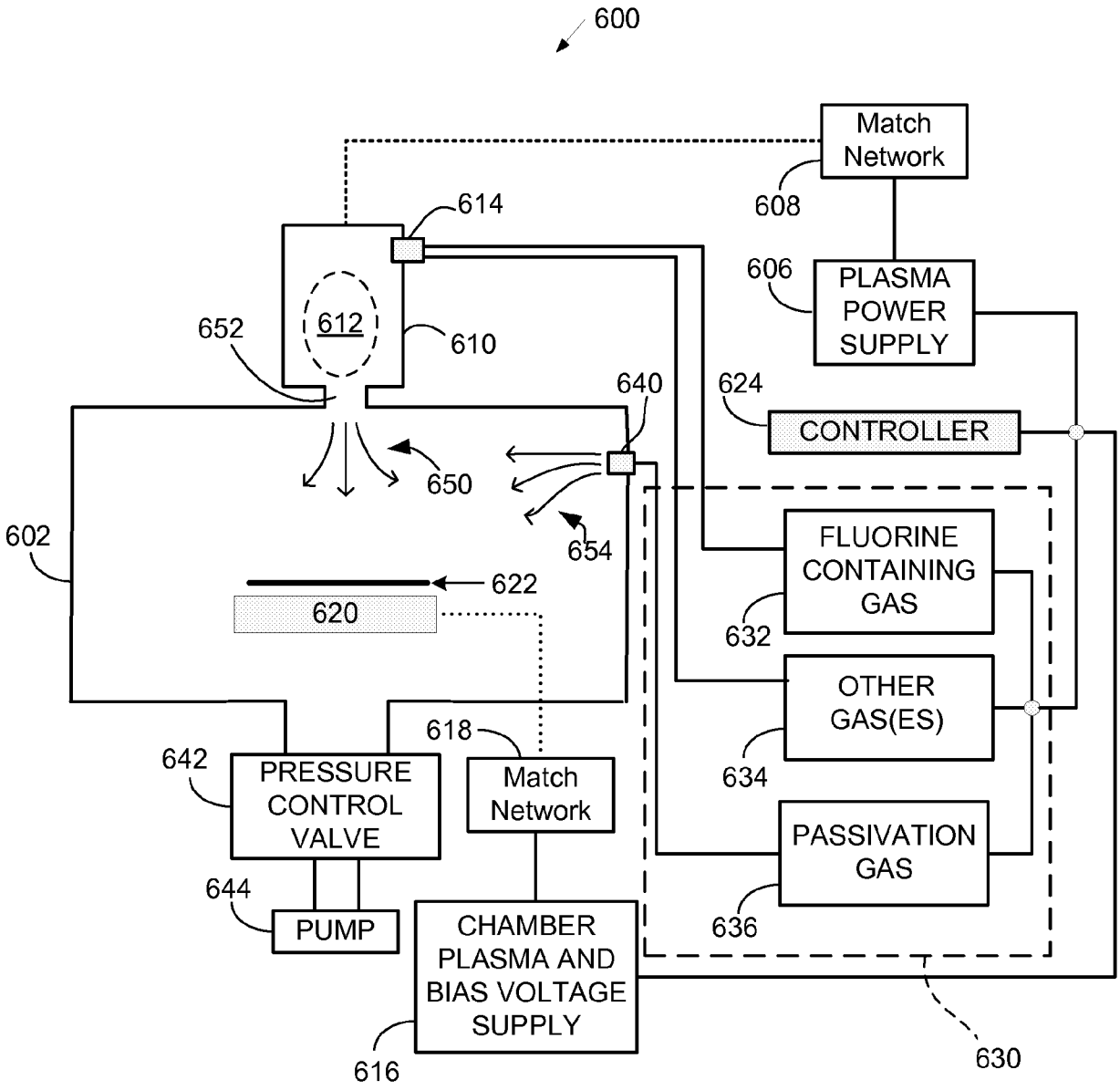
600
Match Network
608
614
606
PLASMA POWER SUPPLY
652
612
610
640
624
CONTROLLER
650
654
602
622
620
FLUORINE CONTAINING GAS
632
OTHER GAS(ES)
634
618
642
PRESSURE CONTROL VALVE
Match Network
PASSIVATION GAS
636
644
PUMP
CHAMBER PLASMA AND BIAS VOLTAGE SUPPLY
616
630

FIG. 6