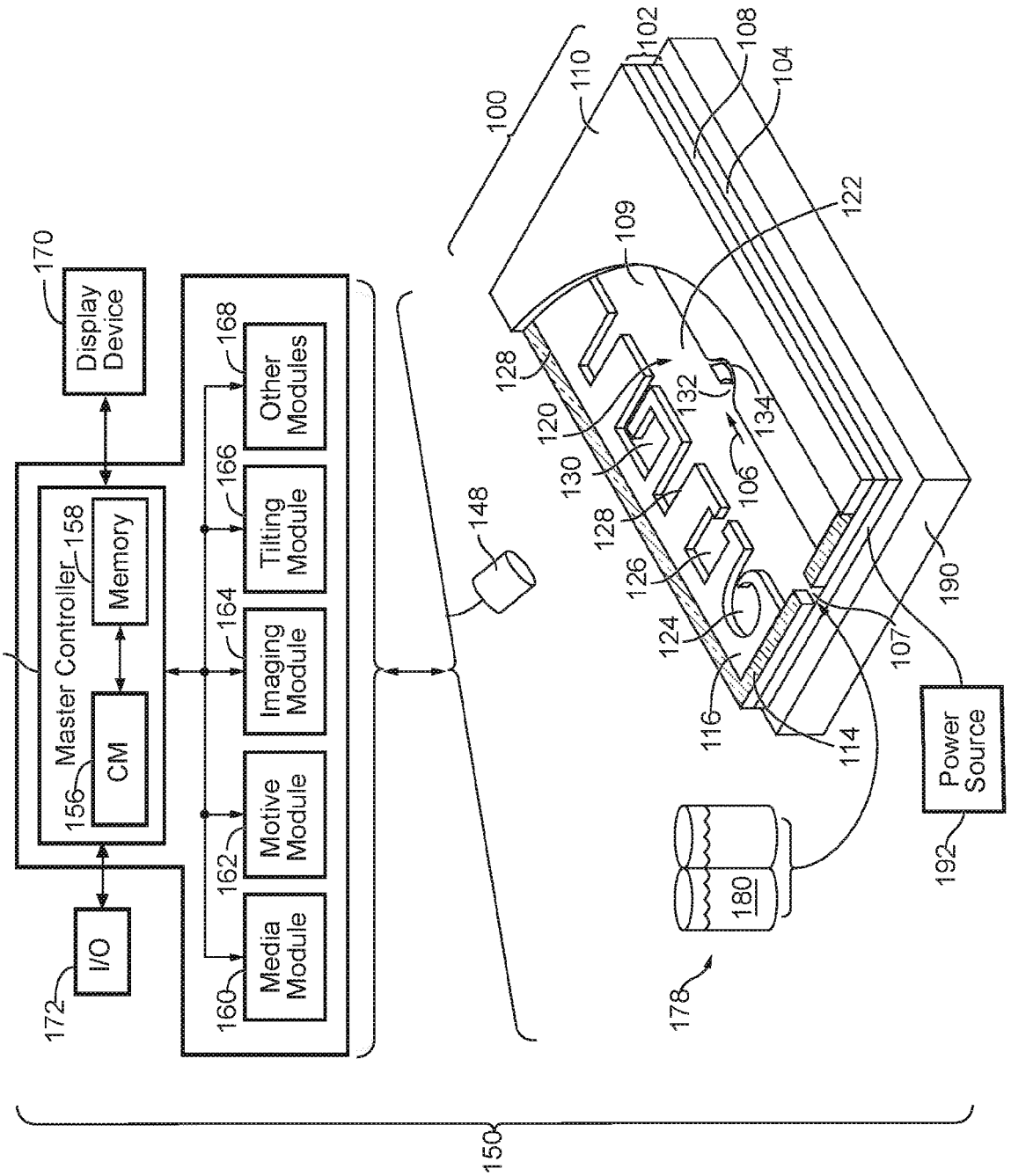
150
154
Master Controller
156
CM
158
Memory
160
Media Module
162
Motive Module
164
Imaging Module
166
Tilting Module
168
Other Modules
170
Display Device
172
I/O
100
102
104
106
107
108
109
110
114
116
120
122
124
126
128
130
132
134
148
178
180
190
192
Power Source

FIG. 1

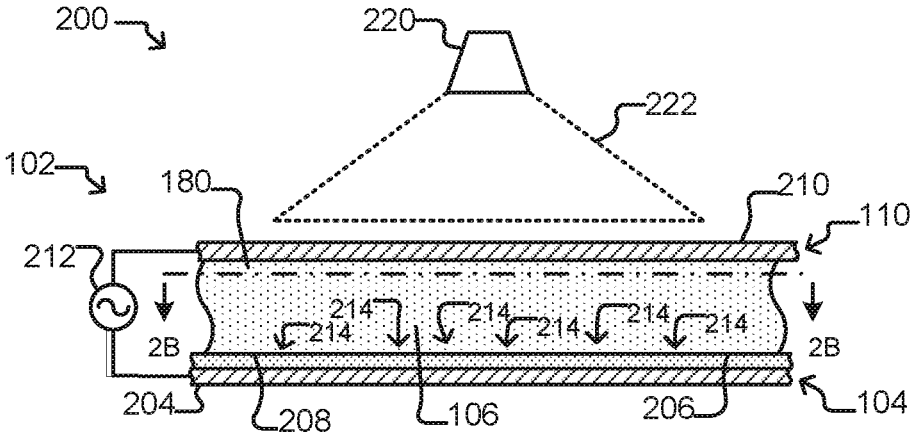
200
220
222
102
180
210
110
212
214
214
214
214
214
214
2B
2B
204
208
106
206
104

FIG. 2A

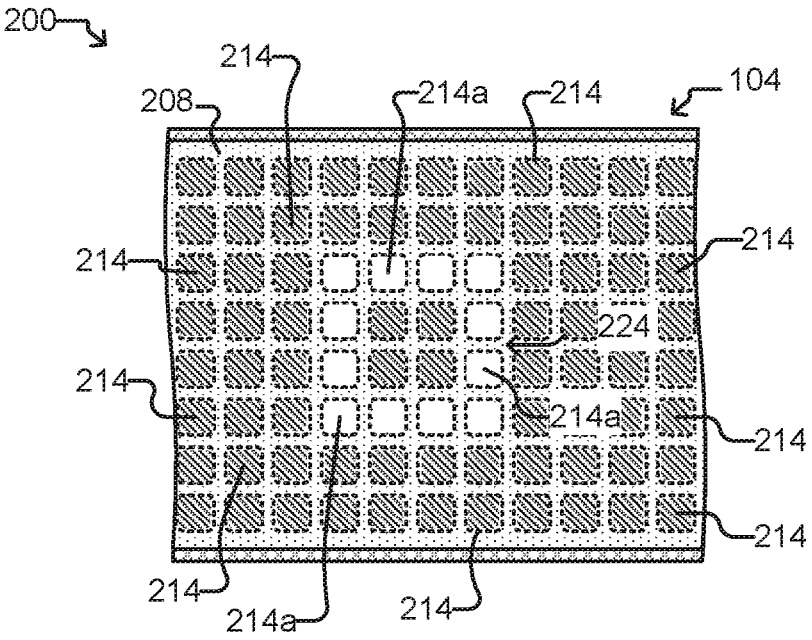
200
214
208
214a
214
104
214
214
224
214
214a
214
214
214
214a
214

FIG. 2B

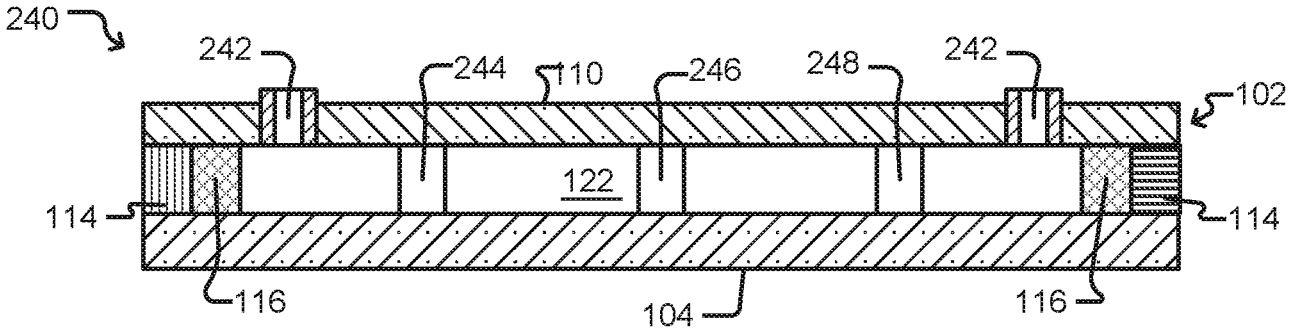
240
242
244
110
246
248
242
102
122
114
114
116
104
116

FIG. 2C

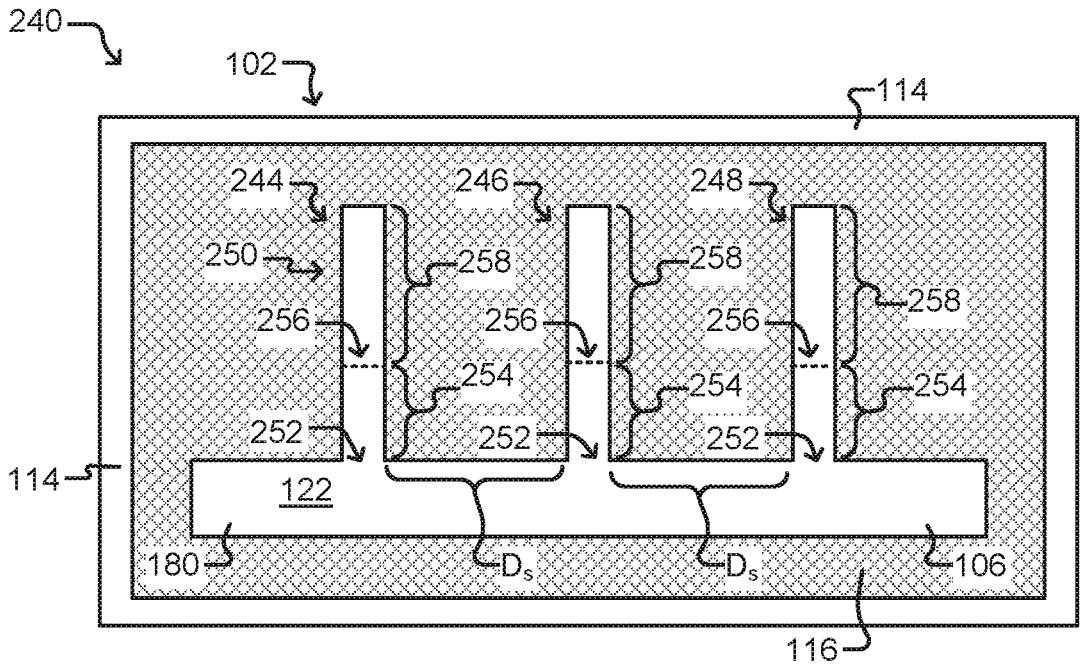
240
102
114
244
246
248
250
258
258
258
256
256
256
254
254
254
252
252
252
114
122
180
D_s
D_s
106
116

FIG. 2D

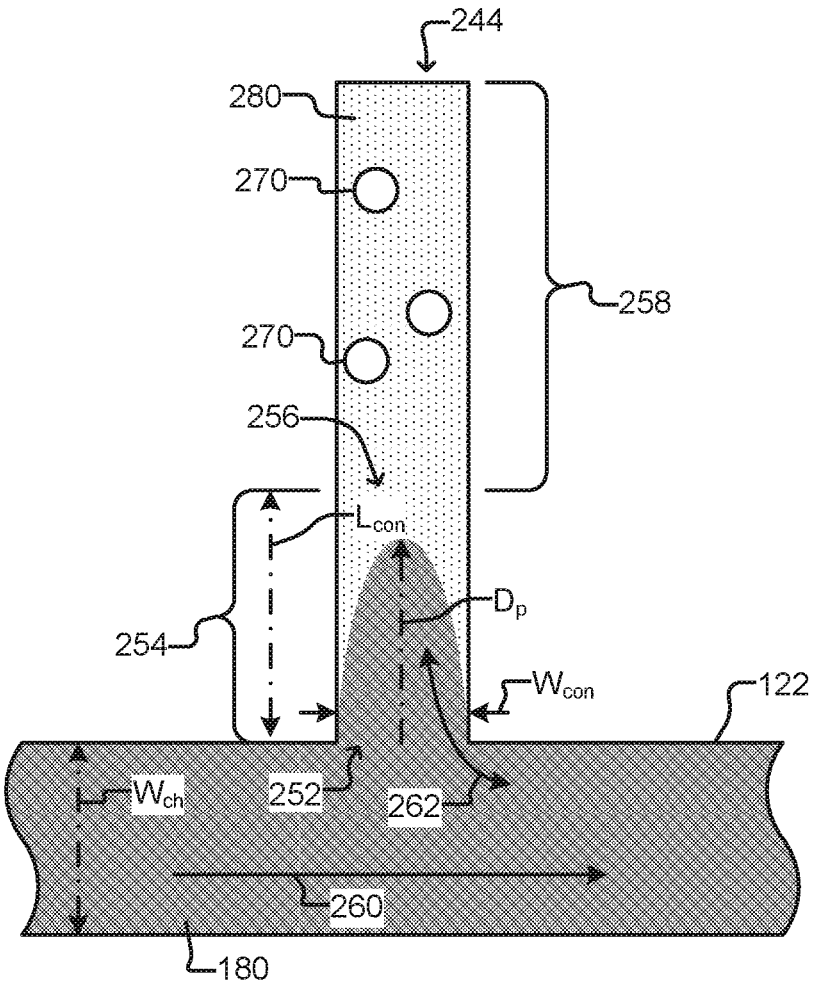

FIG. 2E

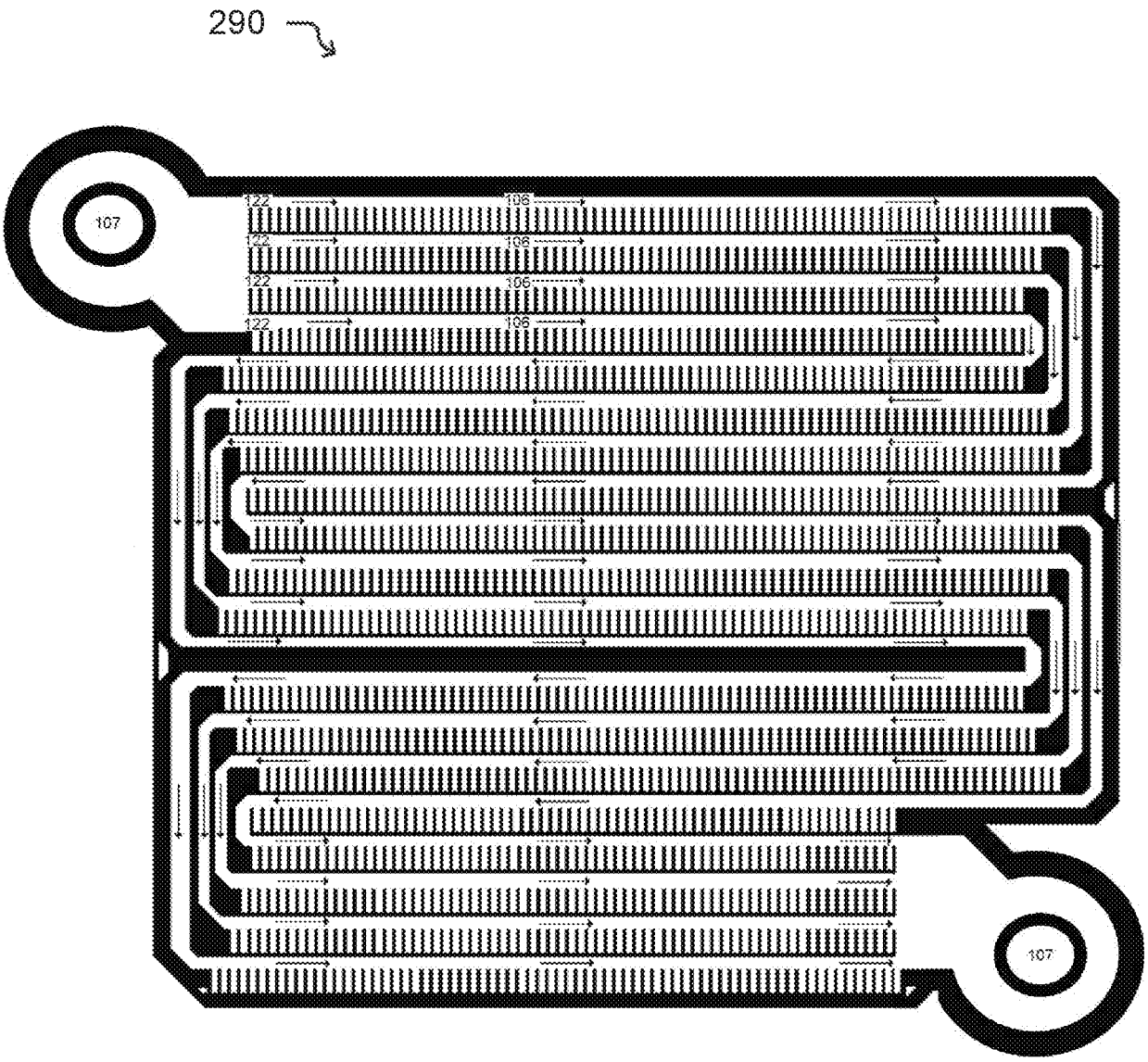

FIG. 2F

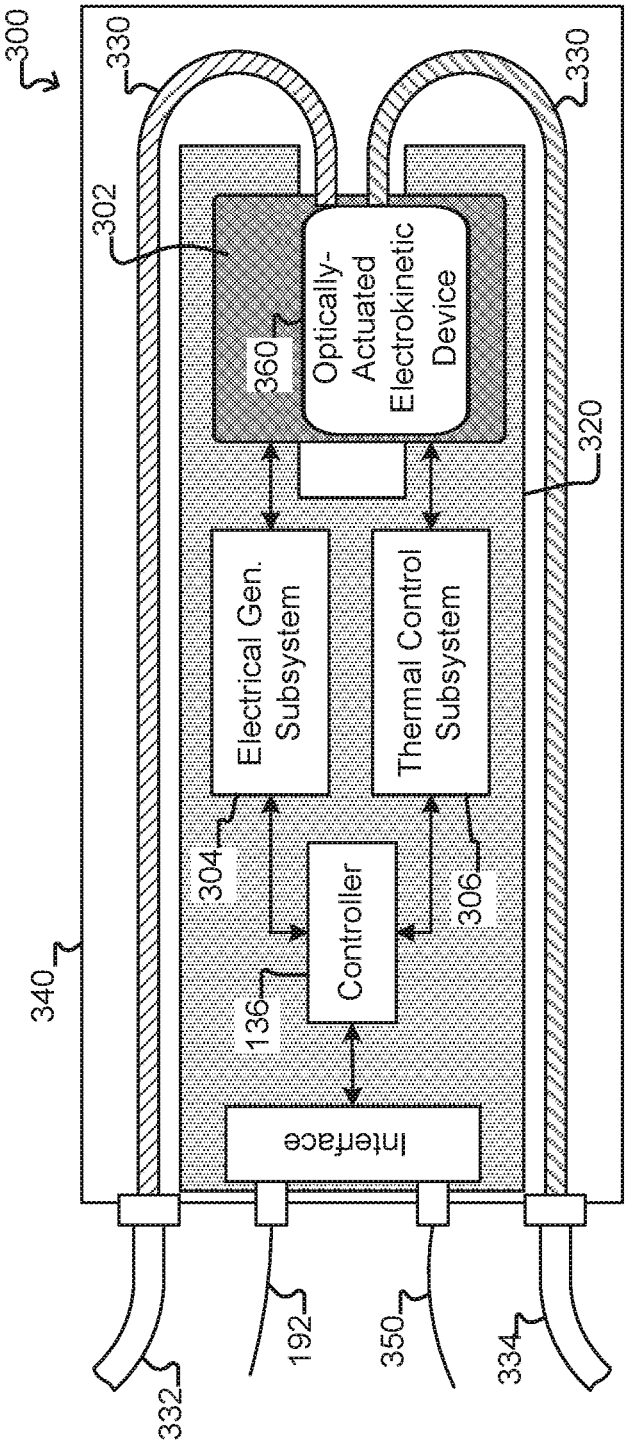
300
330
330
302
360
Optically-Actuated Electrokinetic Device
320
Electrical Gen. Subsystem
Thermal Control Subsystem
304
306
Controller
136
340
Interface
332
192
350
334

FIG. 3A

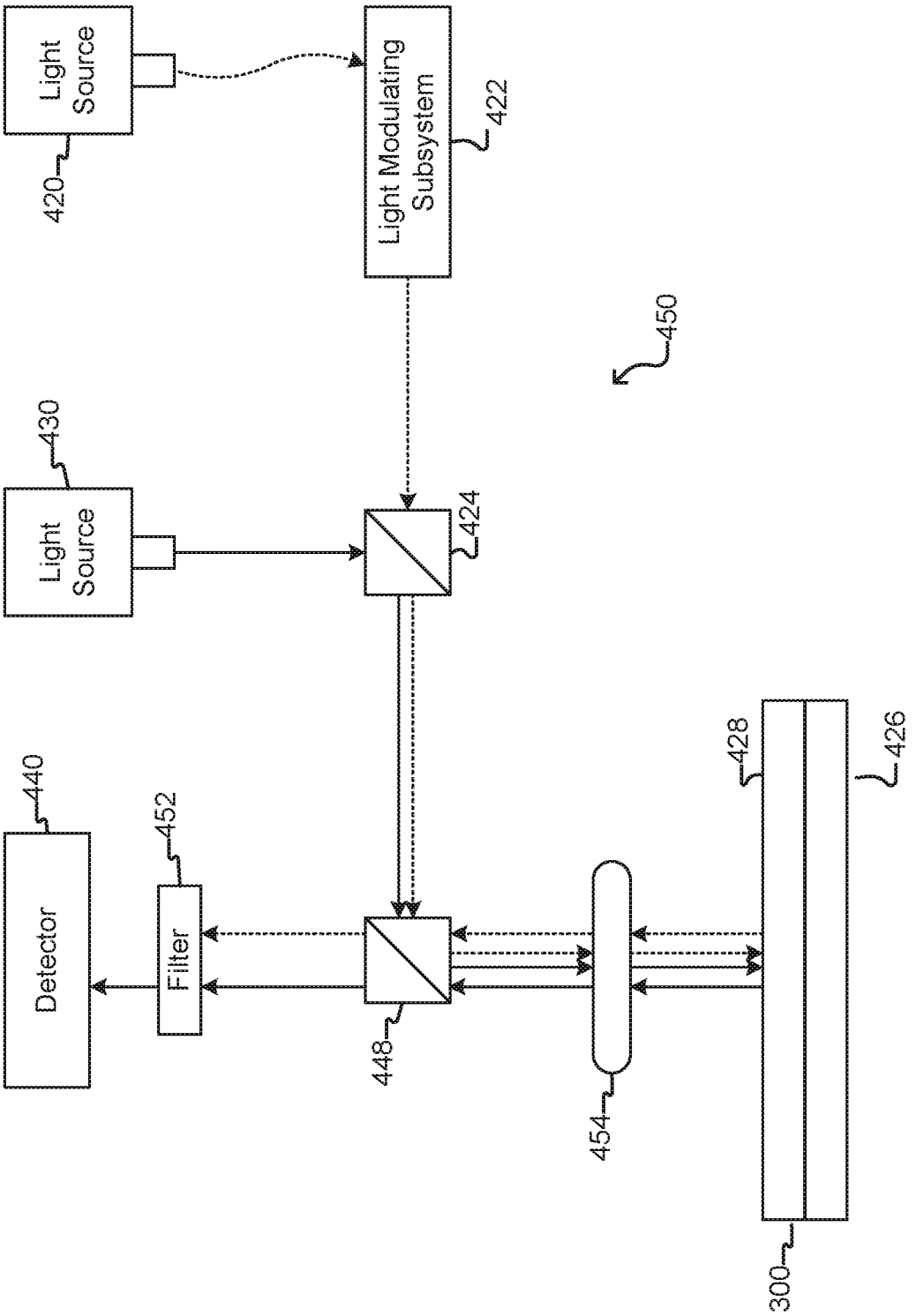
Light Source
420
Light Modulating Subsystem
422
450
Light Source
430
424
Detector
440
Filter
452
448
454
428
426
300

FIG. 3B

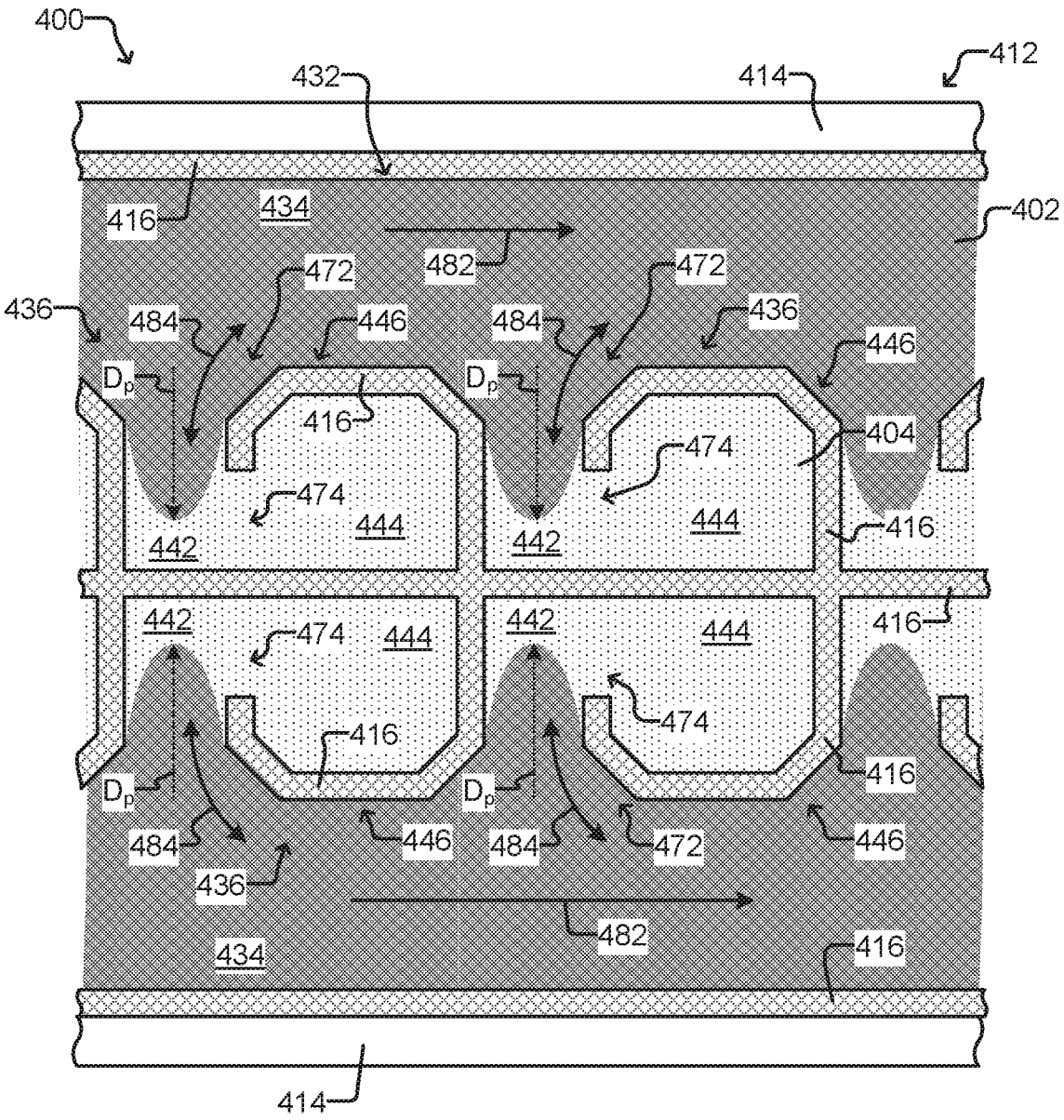
400
412
432
414
416
434
402
482
472
436
484
446
D_p
404
474
444
442

FIG. 4A

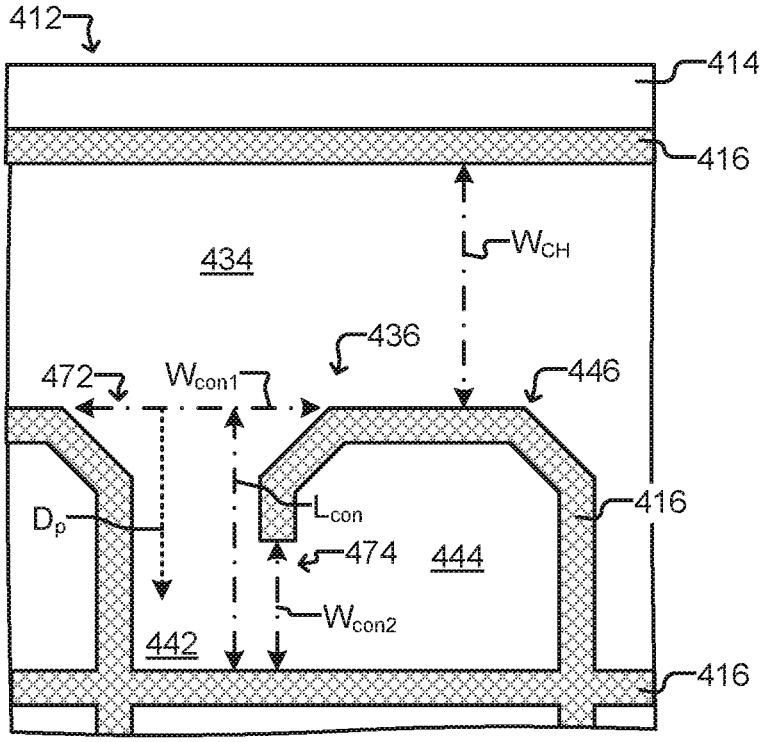
412
414
416
434
W_{CH}
436
472
W_{con1}
446
D_p
L_{con}
474
444
W_{con2}
442
416
416

FIG.4B

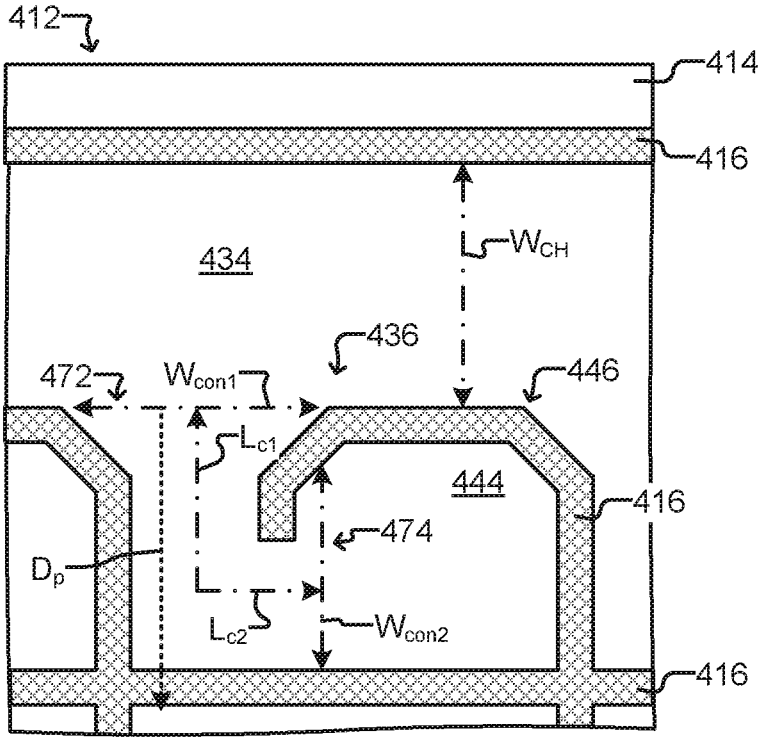
412
414
416
434
W_{CH}
436
472
W_{con1}
446
L_{c1}
444
416
474
D_p
L_{c2}
W_{con2}
416

FIG. 4C

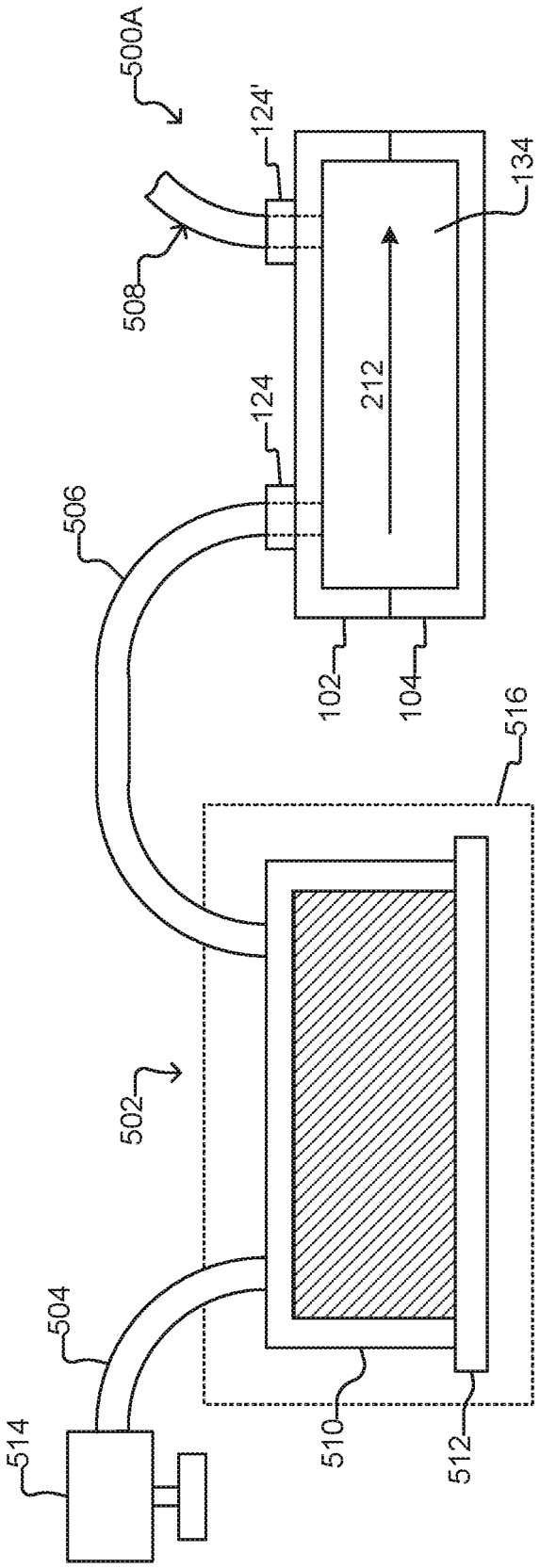

FIG. 5A

FIG. 5B

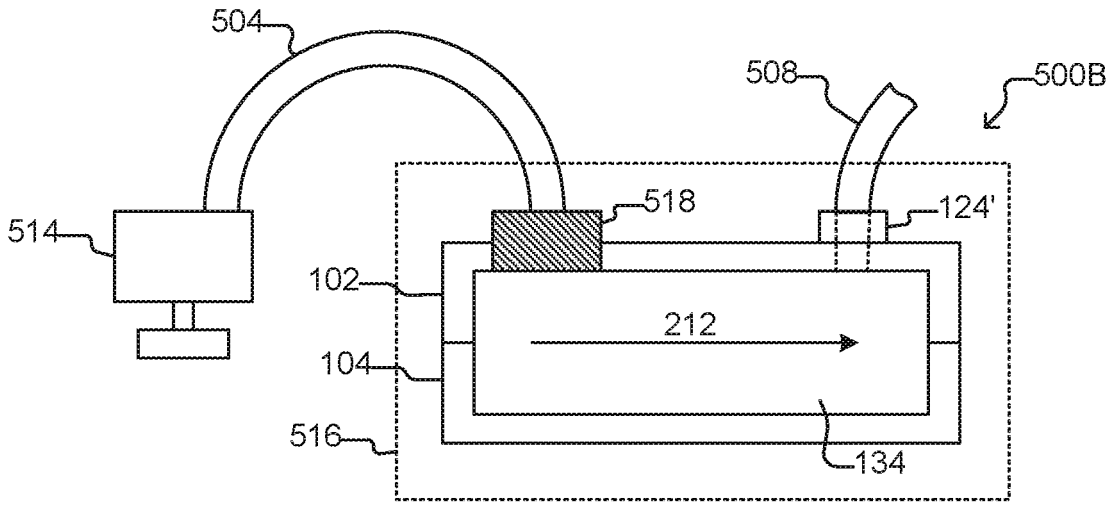
504
508
500B
514
518
124'
102
212
104
516
134

FIG. 5C

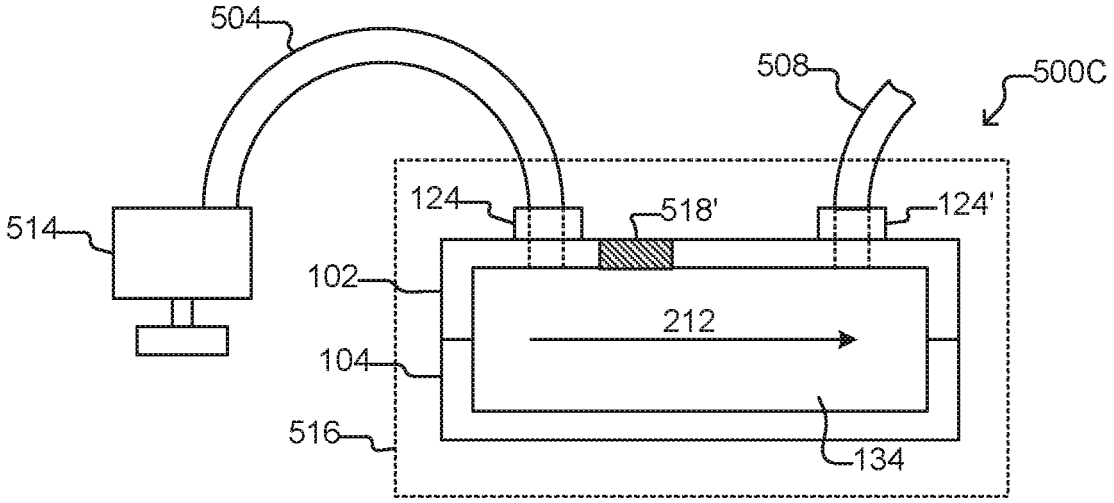
504
508
500C
514
124
518'
124'
102
212
104
516
134

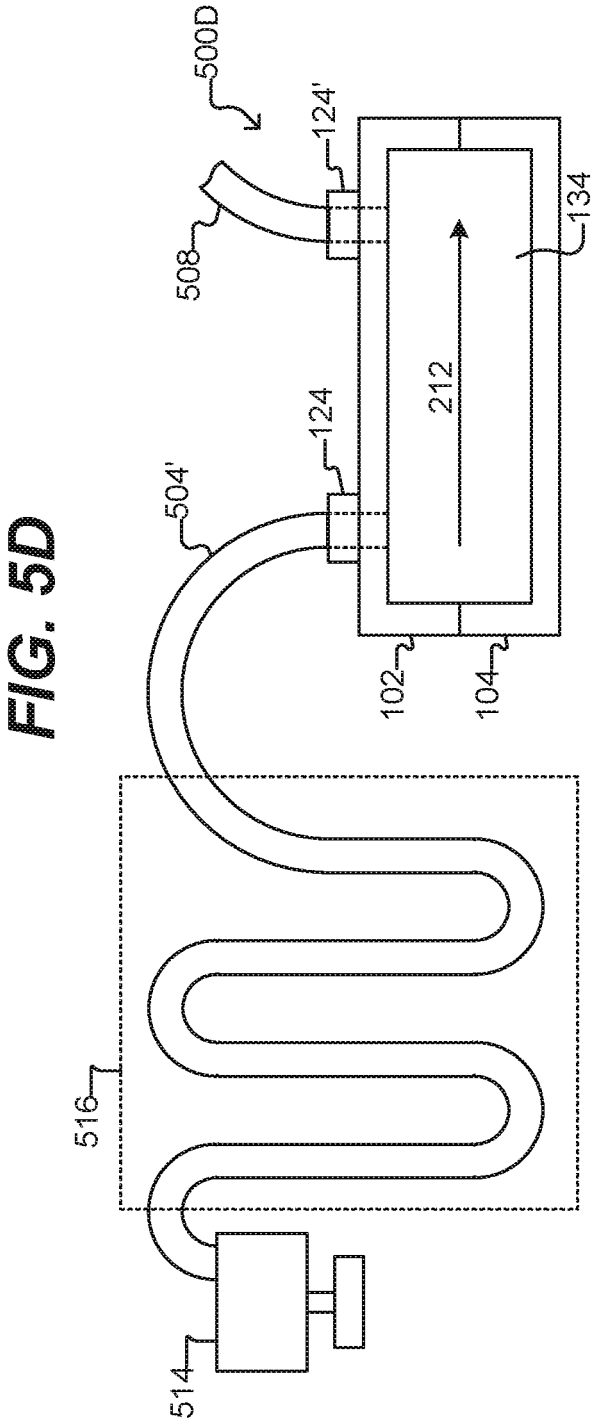

FIG. 5D

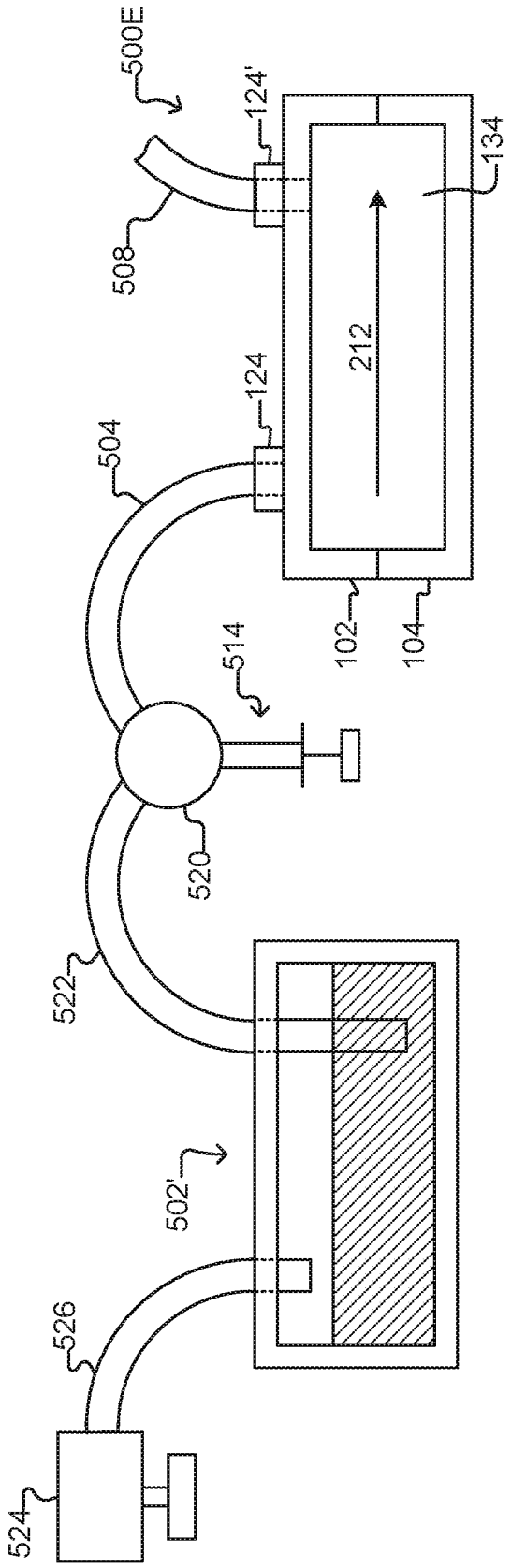

FIG. 5E

FIG. 6

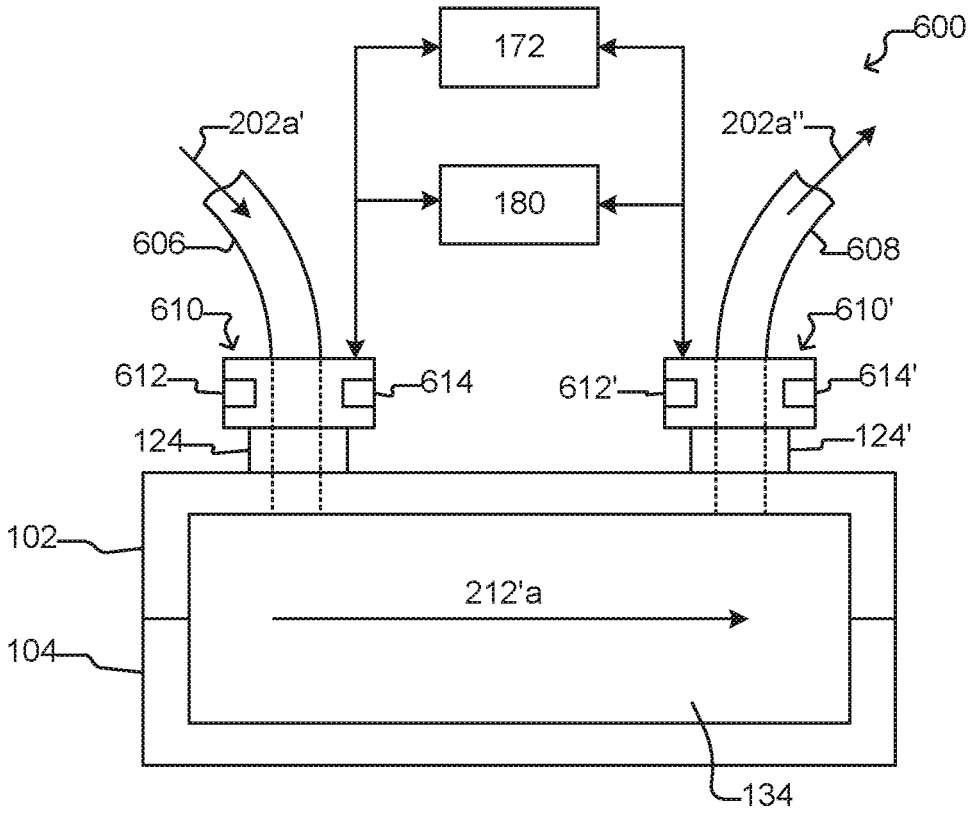
172
600
202a'
202a''
180
606
608
610
610'
612
614
612'
614'
124
124'
102
212'a
104
134

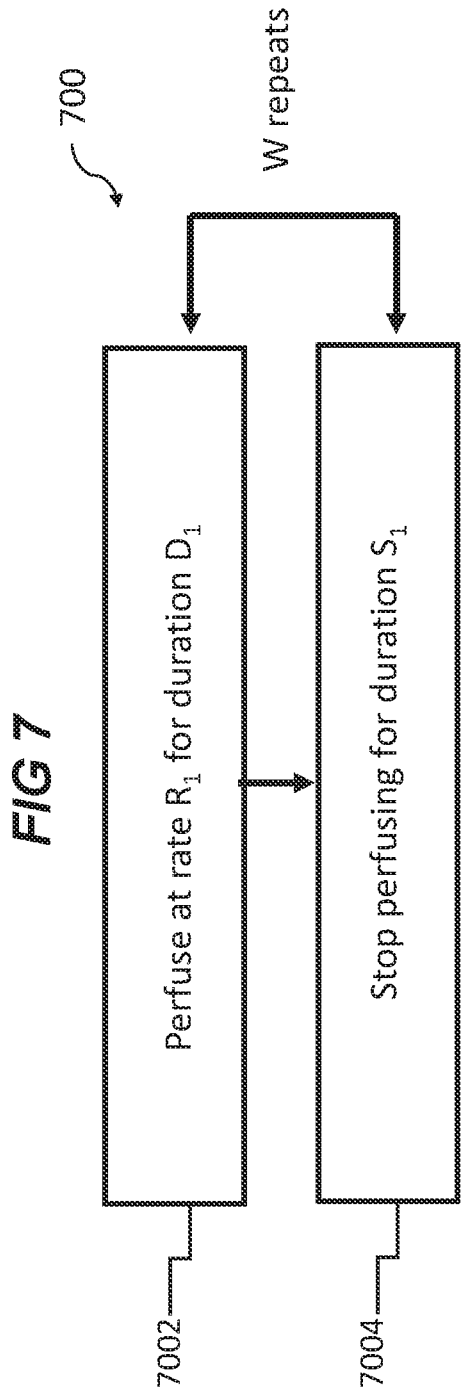
700
W repeats
Perfuse at rate R_1 for duration D_1
Stop perfusing for duration S_1
7002
7004

FIG 7

FIG 8

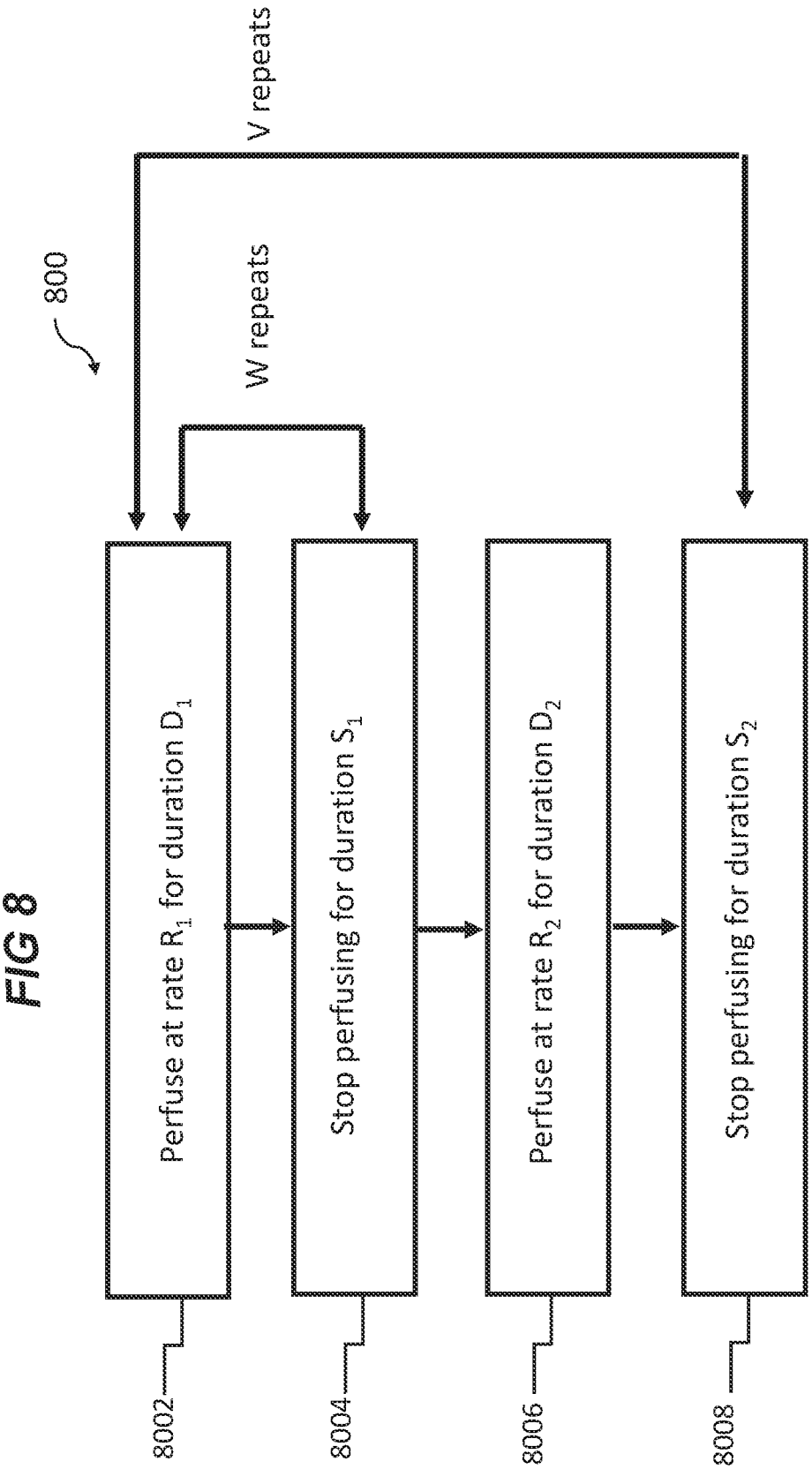
800
V repeats
W repeats
Perfuse at rate R_1 for duration D_1
Stop perfusing for duration S_1
Perfuse at rate R_2 for duration D_2
Stop perfusing for duration S_2
8002
8004
8006
8008

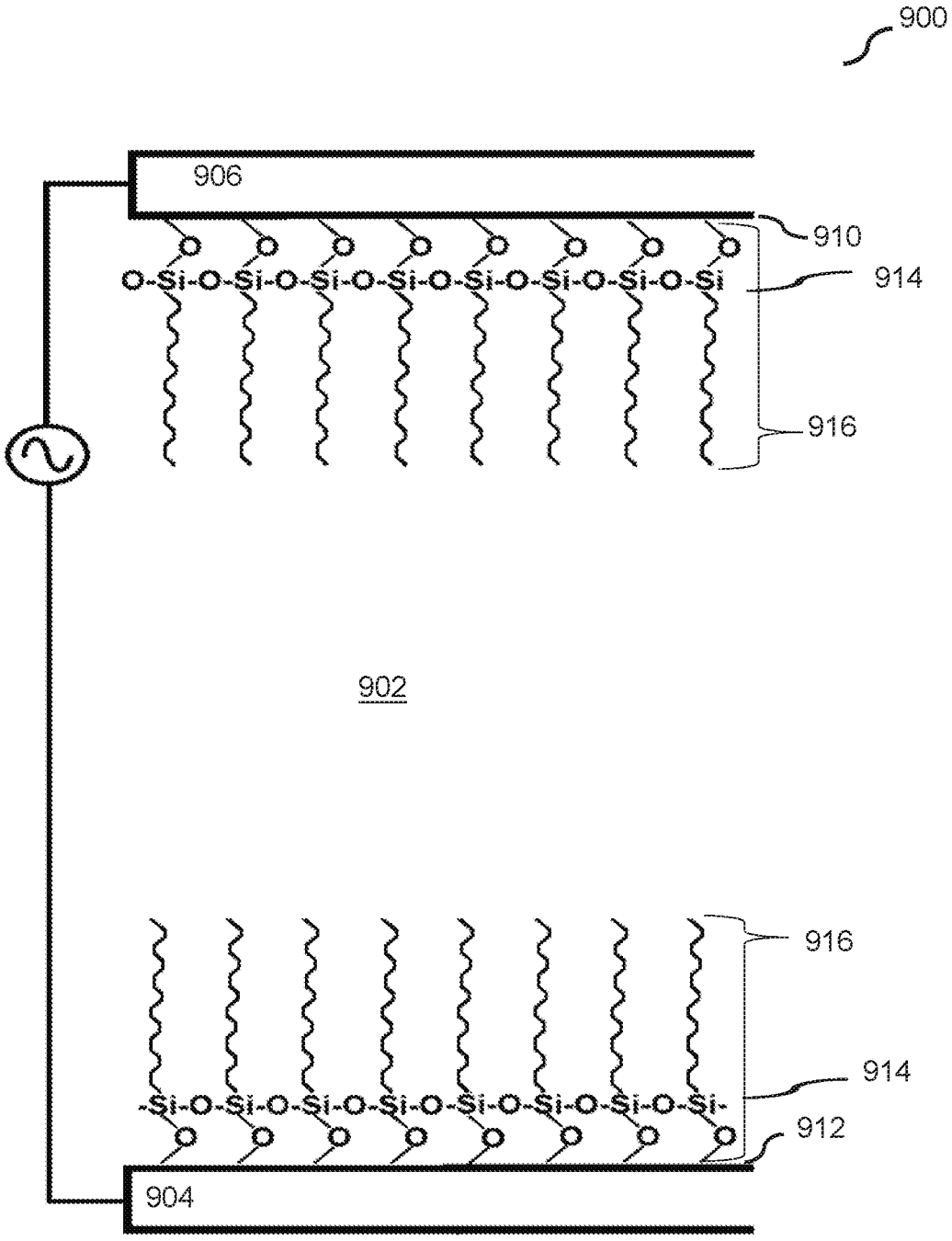

FIG. 9

FIG 10A

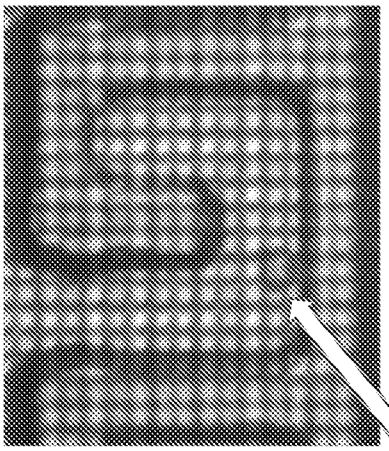

FIG 10B

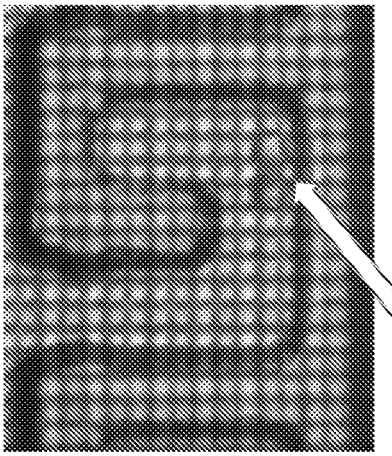

FIG 10C

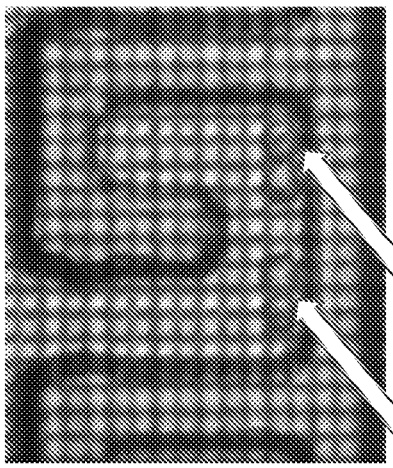

FIG 10D

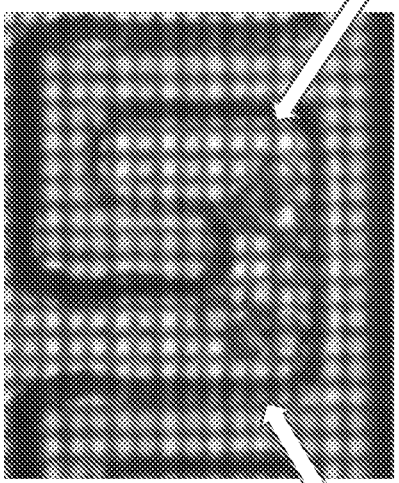

FIG 10E

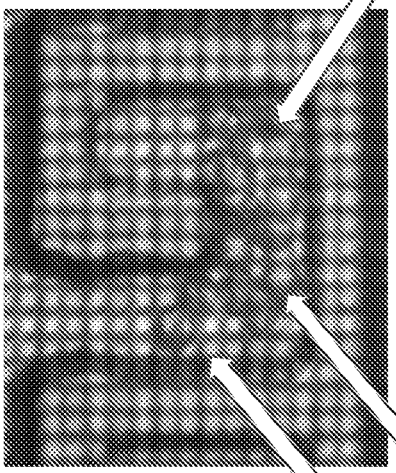

FIG 11B

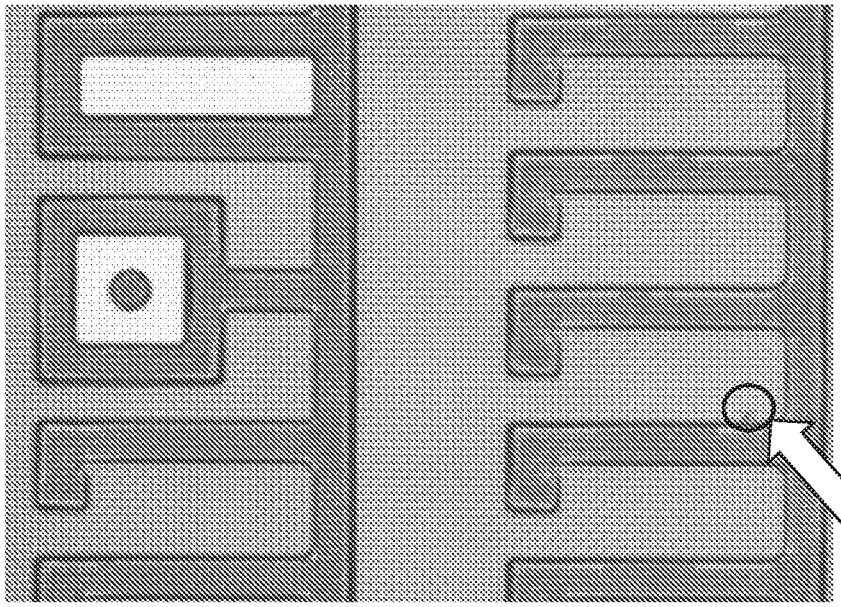

FIG 11A

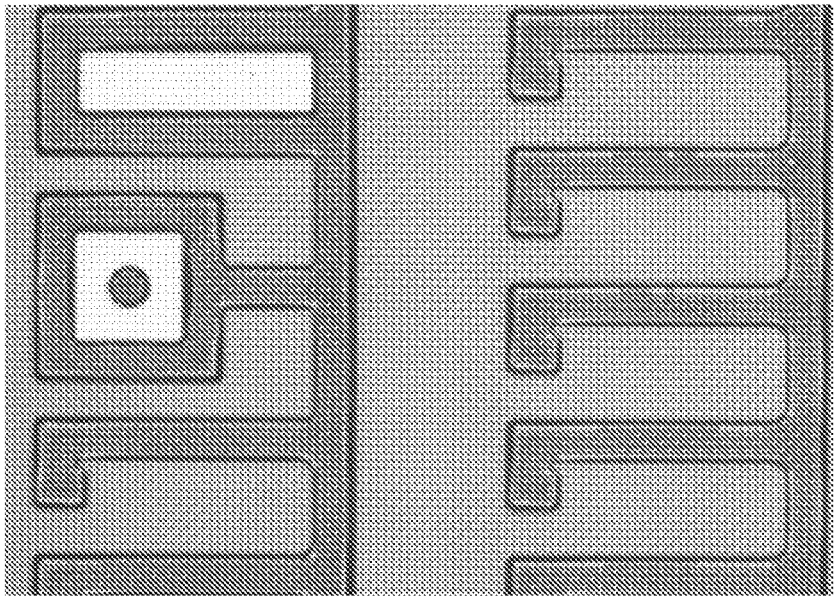

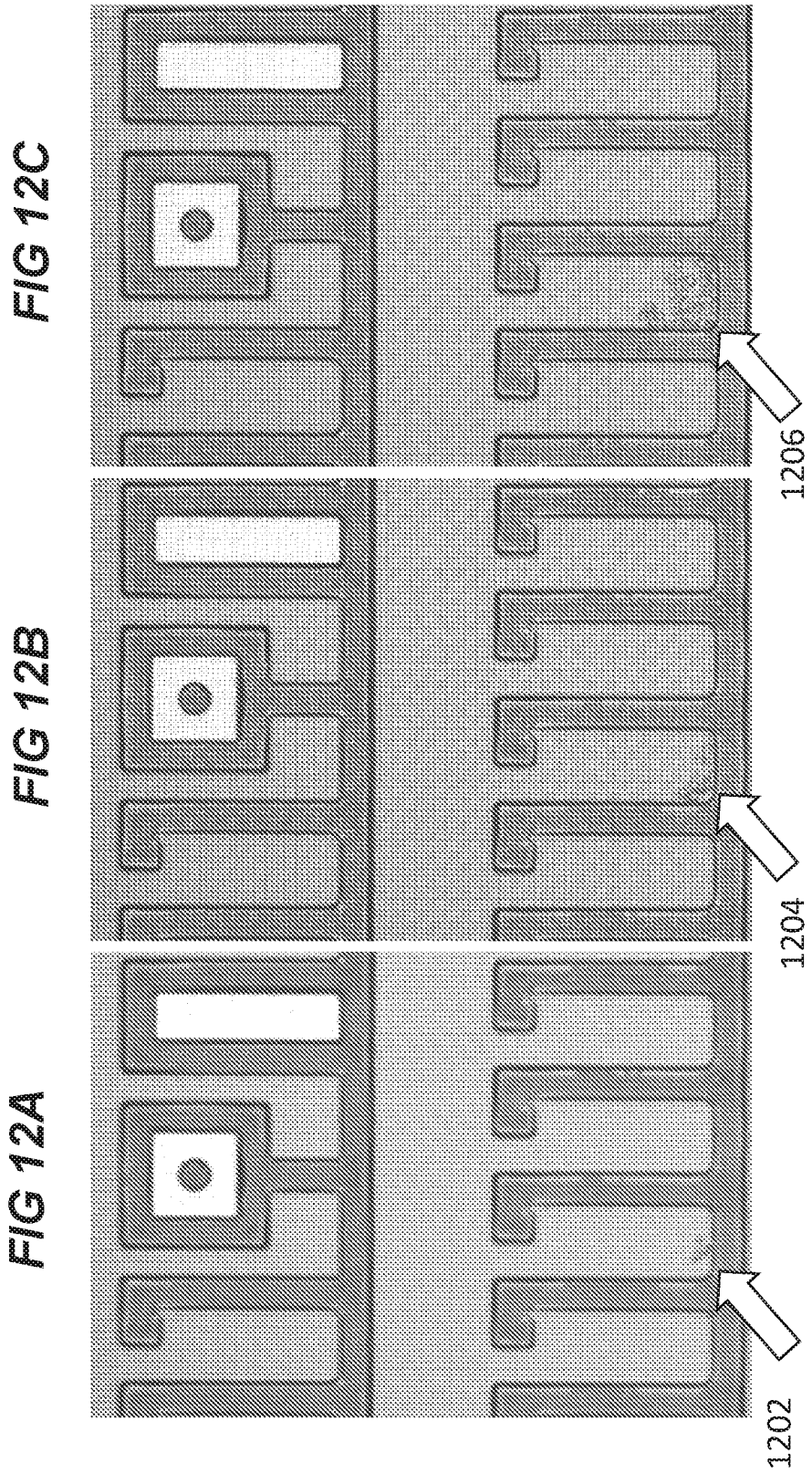
FIG 12A
FIG 12B
FIG 12C
1202
1204
1206

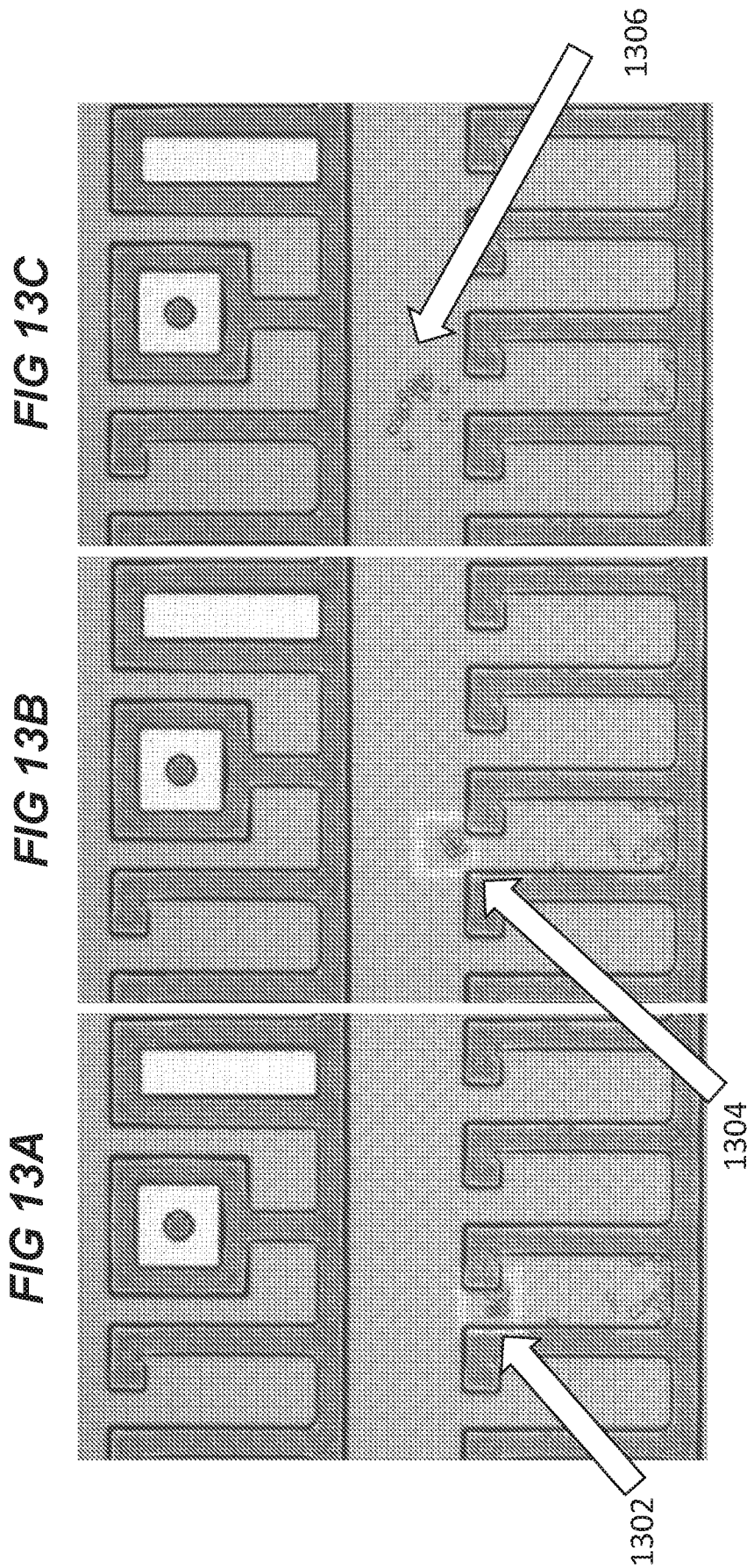
FIG 13A
FIG 13B
FIG 13C
1302
1304
1306

FIG. 14A

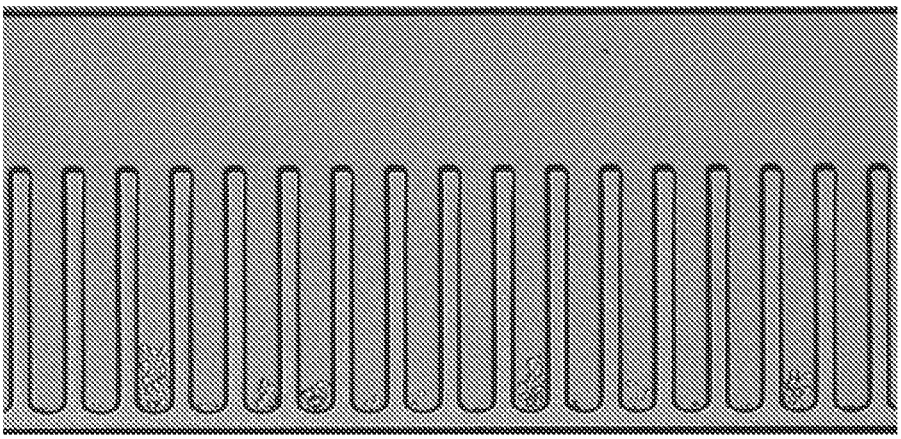

FIG. 14B

