FIG. 9

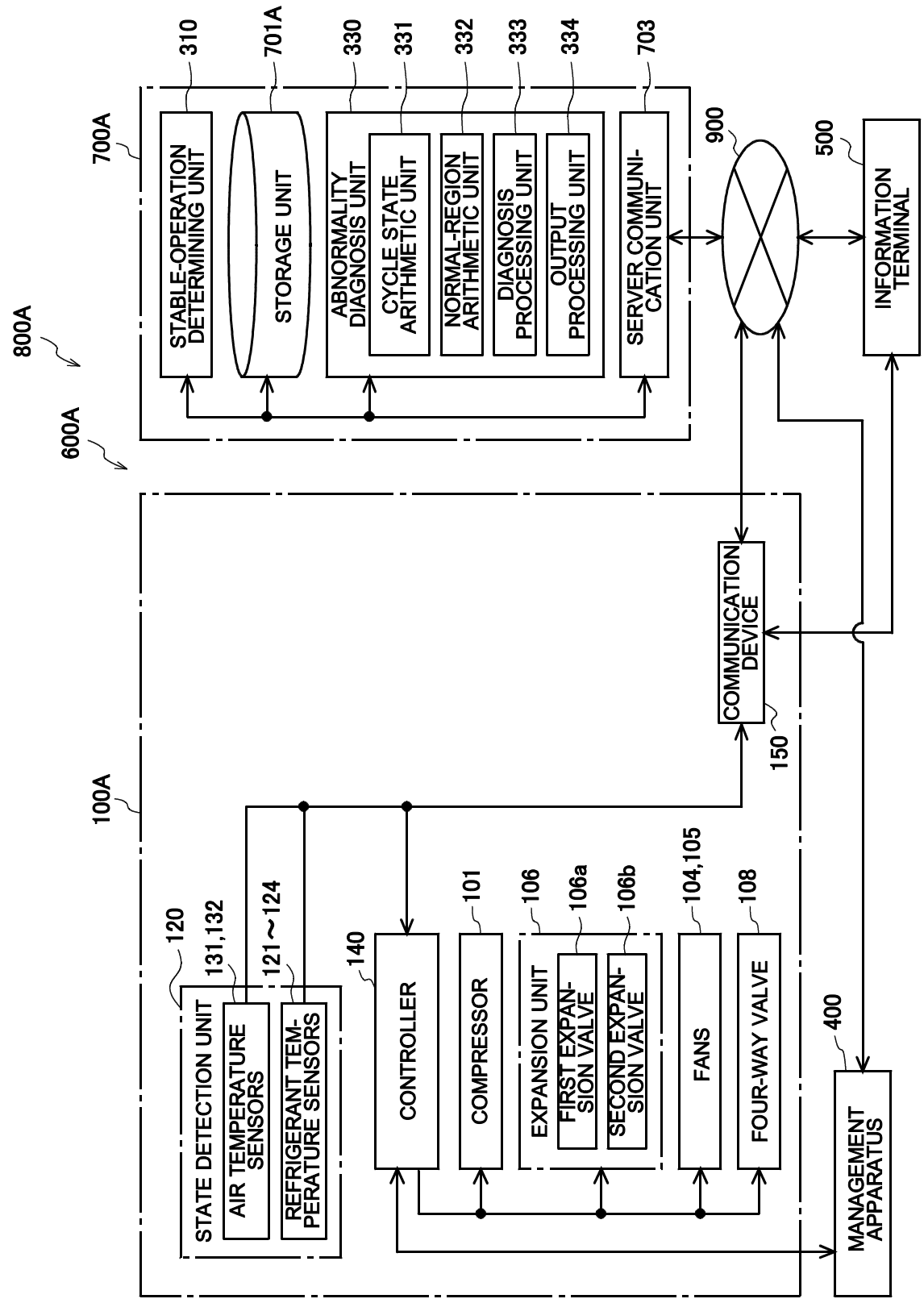
800A
600A
700A
STABLE-OPERATION DETERMINING UNIT
310
STORAGE UNIT
701A
ABNORMALITY DIAGNOSIS UNIT
330
CYCLE STATE ARITHMETIC UNIT
331
NORMAL-REGION ARITHMETIC UNIT
332
DIAGNOSIS PROCESSING UNIT
333
OUTPUT PROCESSING UNIT
334
SERVER COMMUNI-CATION UNIT
703
900
500
INFORMATION TERMINAL
100A
COMMUNICATION DEVICE
150
STATE DETECTION UNIT
120
AIR TEMPERATURE SENSORS
131,132
REFRIGERANT TEM-PERATURE SENSORS
121～124
CONTROLLER
140
COMPRESSOR
101
EXPANSION UNIT
106
FIRST EXPAN-SION VALVE
106a
SECOND EXPAN-SION VALVE
106b
FANS
104,105
FOUR-WAY VALVE
108
MANAGEMENT APPARATUS
400