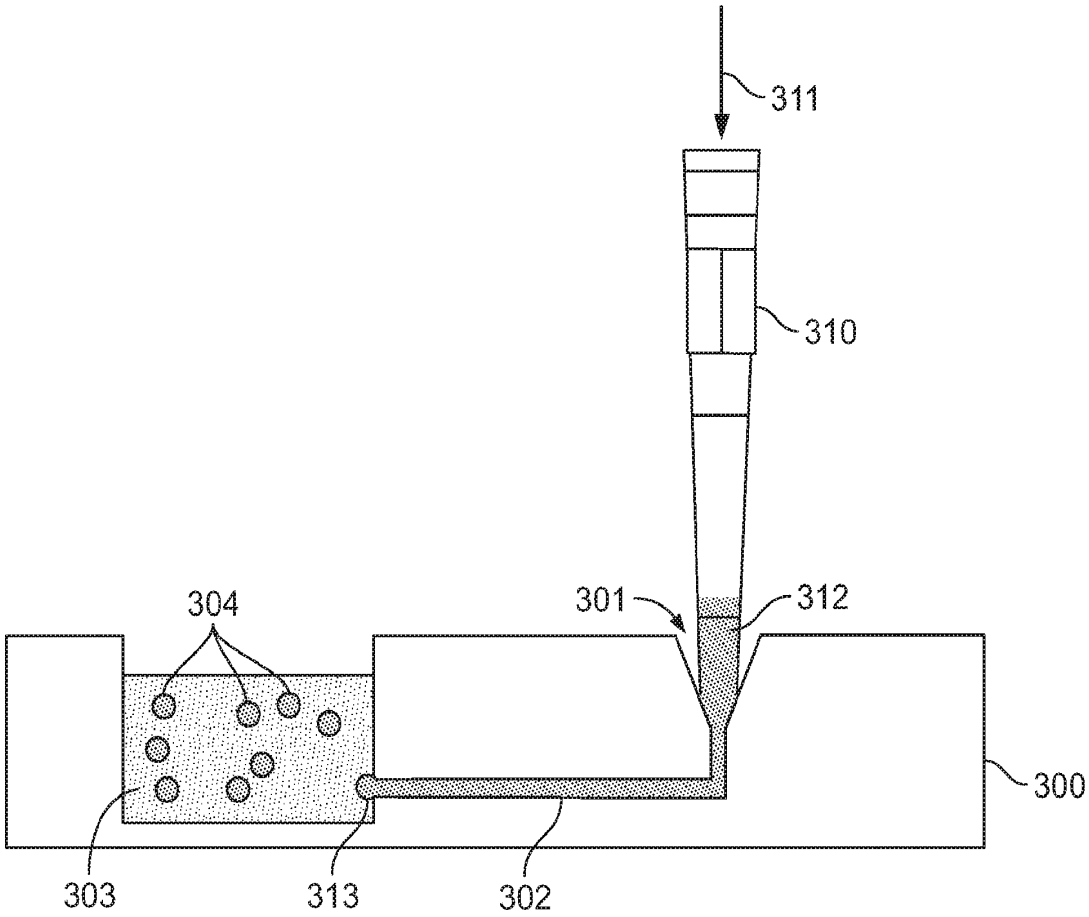

FIG. 1

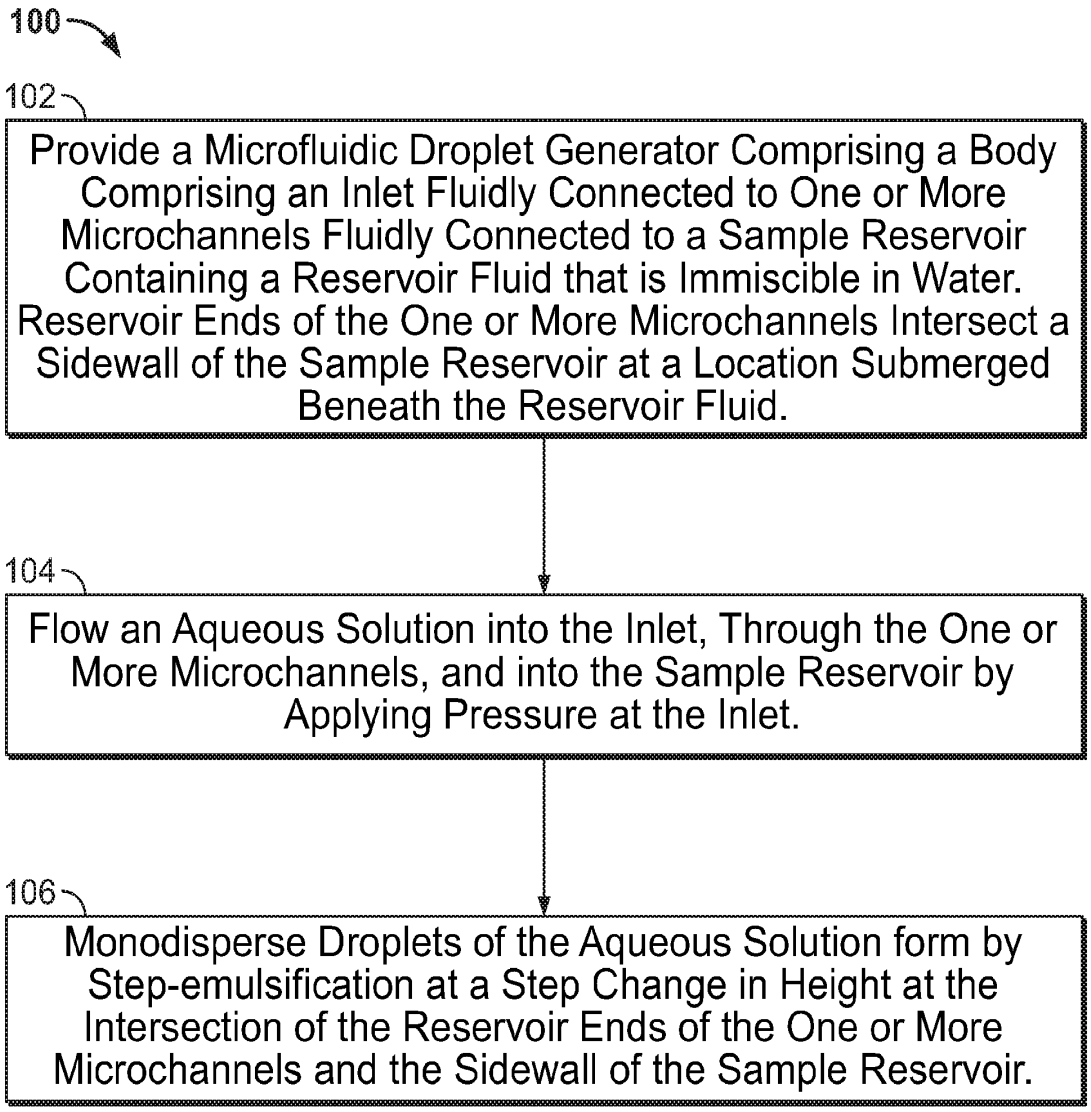
100
102
Provide a Microfluidic Droplet Generator Comprising a Body Comprising an Inlet Fluidly Connected to One or More Microchannels Fluidly Connected to a Sample Reservoir Containing a Reservoir Fluid that is Immiscible in Water. Reservoir Ends of the One or More Microchannels Intersect a Sidewall of the Sample Reservoir at a Location Submerged Beneath the Reservoir Fluid.
104
Flow an Aqueous Solution into the Inlet, Through the One or More Microchannels, and into the Sample Reservoir by Applying Pressure at the Inlet.
106
Monodisperse Droplets of the Aqueous Solution form by Step-emulsification at a Step Change in Height at the Intersection of the Reservoir Ends of the One or More Microchannels and the Sidewall of the Sample Reservoir.

FIG. 2

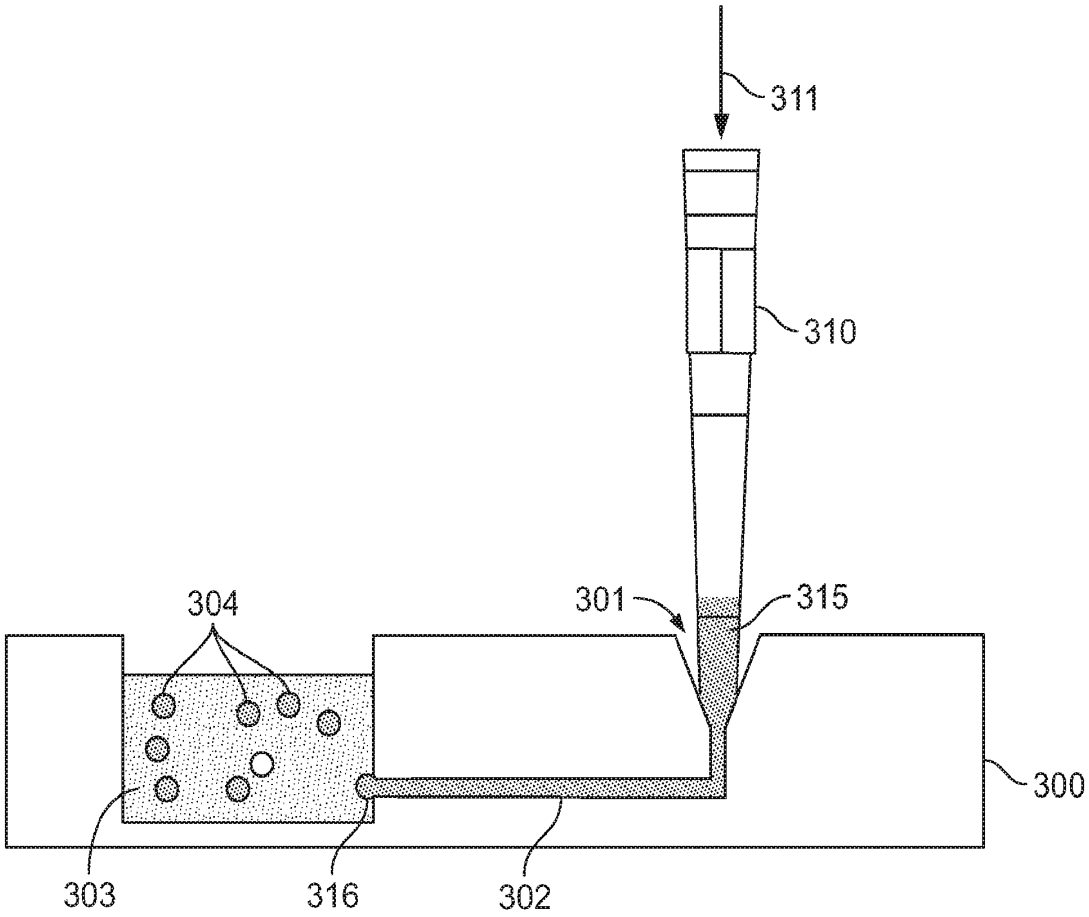

FIG. 3

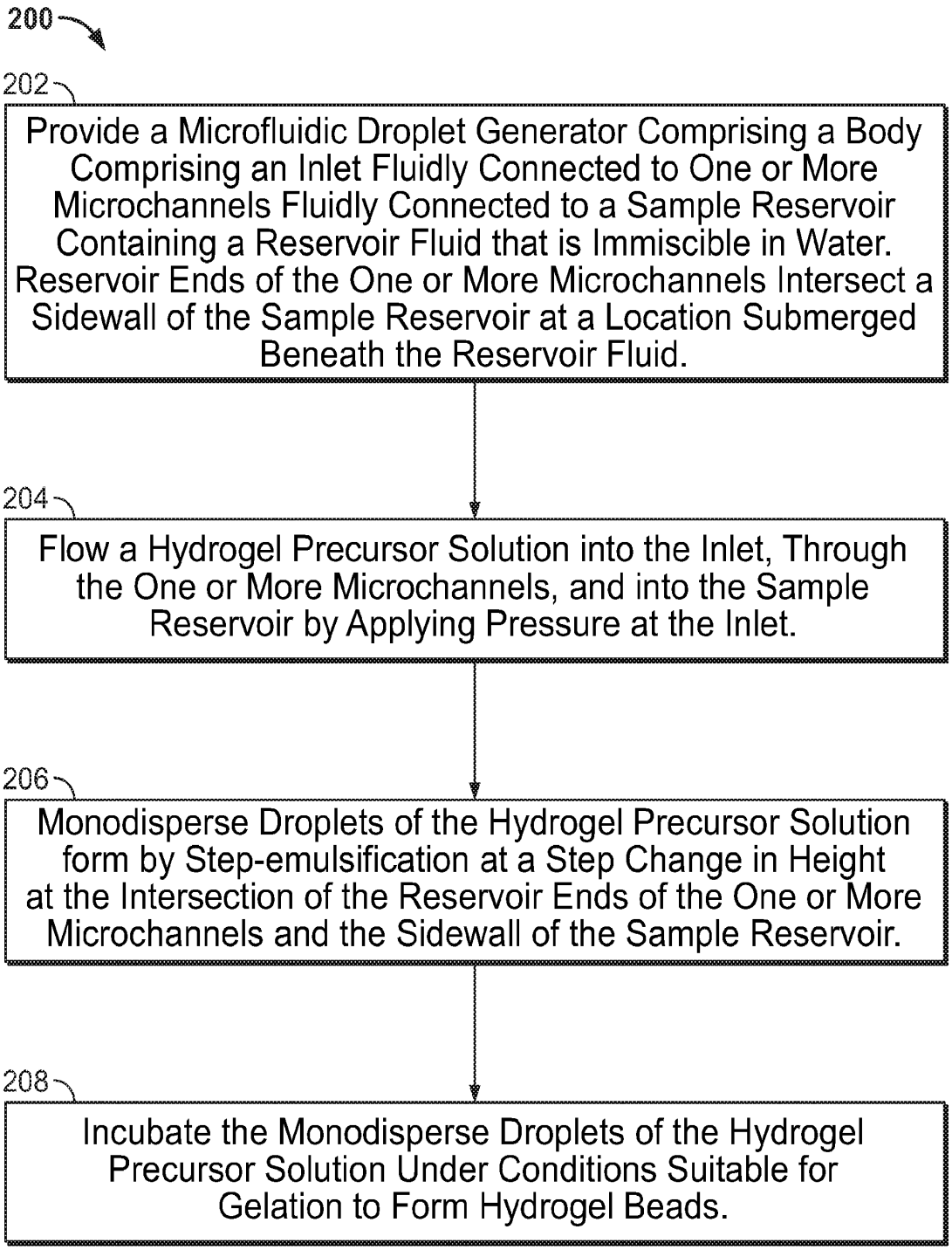
200
202
Provide a Microfluidic Droplet Generator Comprising a Body Comprising an Inlet Fluidly Connected to One or More Microchannels Fluidly Connected to a Sample Reservoir Containing a Reservoir Fluid that is Immiscible in Water. Reservoir Ends of the One or More Microchannels Intersect a Sidewall of the Sample Reservoir at a Location Submerged Beneath the Reservoir Fluid.
204
Flow a Hydrogel Precursor Solution into the Inlet, Through the One or More Microchannels, and into the Sample Reservoir by Applying Pressure at the Inlet.
206
Monodisperse Droplets of the Hydrogel Precursor Solution form by Step-emulsification at a Step Change in Height at the Intersection of the Reservoir Ends of the One or More Microchannels and the Sidewall of the Sample Reservoir.
208
Incubate the Monodisperse Droplets of the Hydrogel Precursor Solution Under Conditions Suitable for Gelation to Form Hydrogel Beads.

FIG. 4

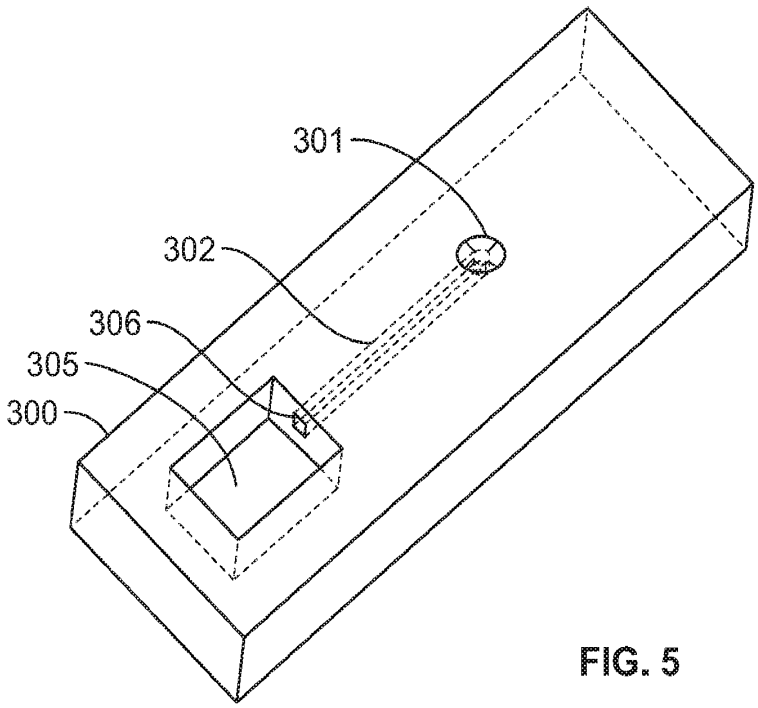

FIG. 5

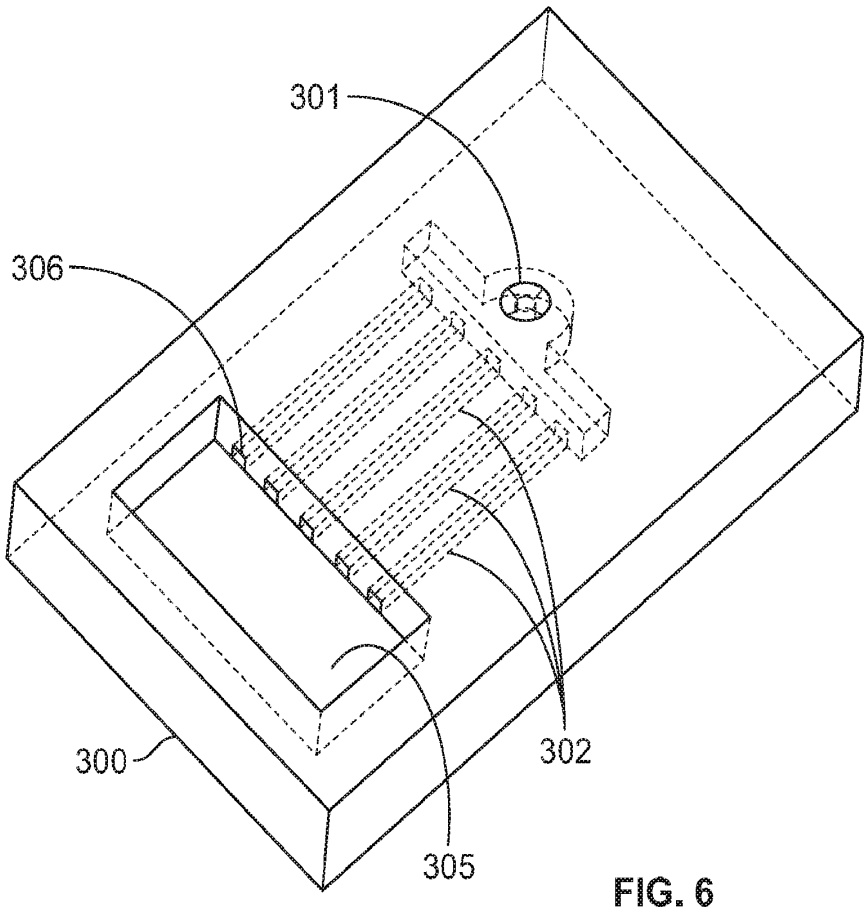

FIG. 6

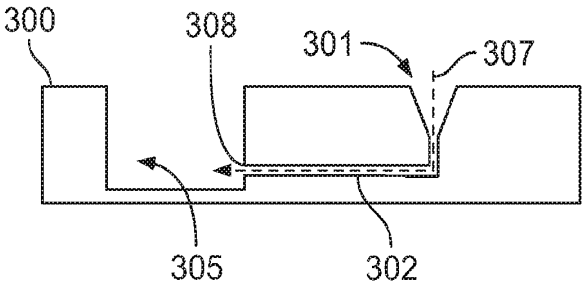

FIG. 7

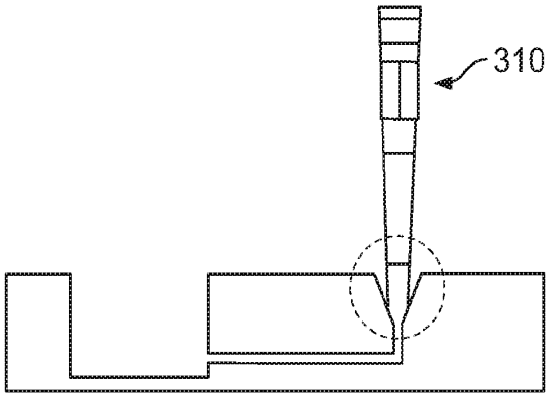

FIG. 8

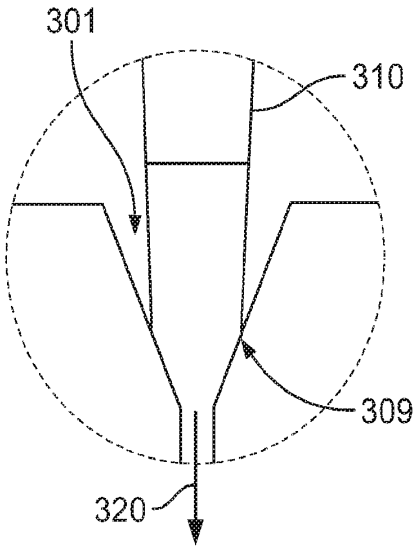

FIG. 9

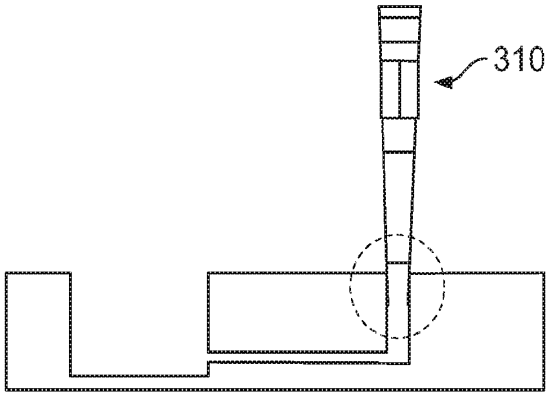

FIG. 10

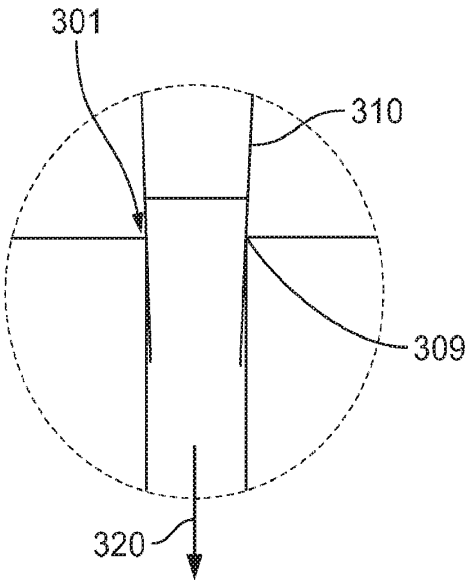

FIG. 11

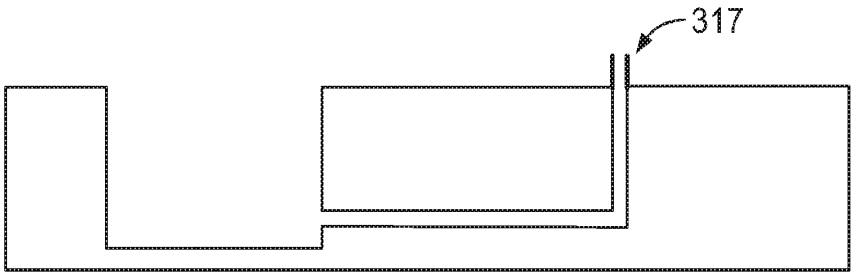

FIG. 12

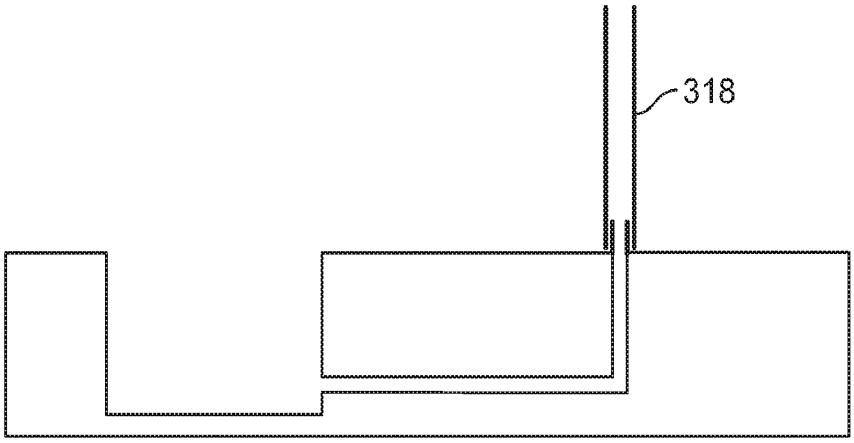

FIG. 13

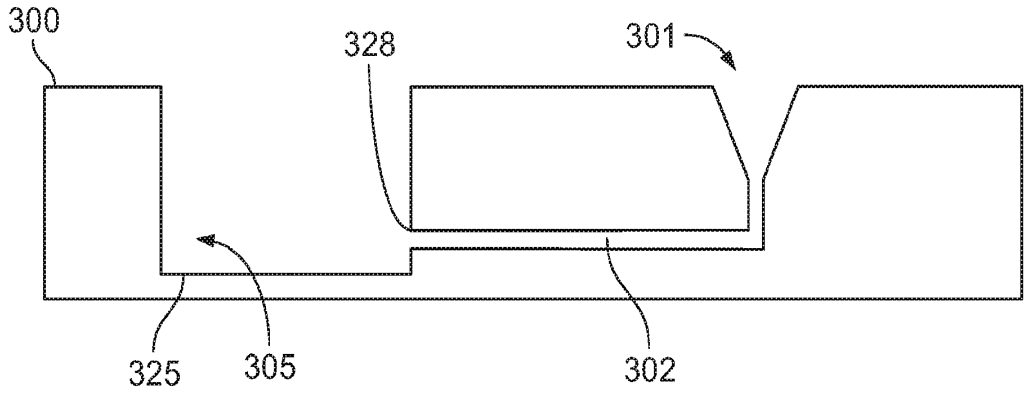

FIG. 14

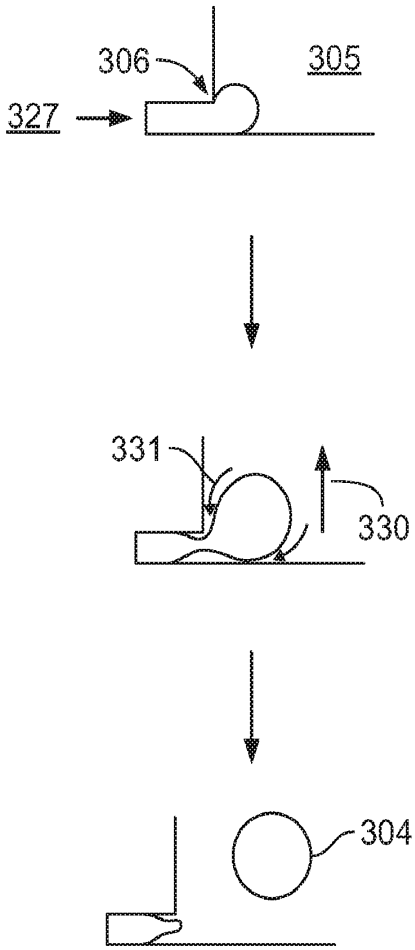

FIG. 15

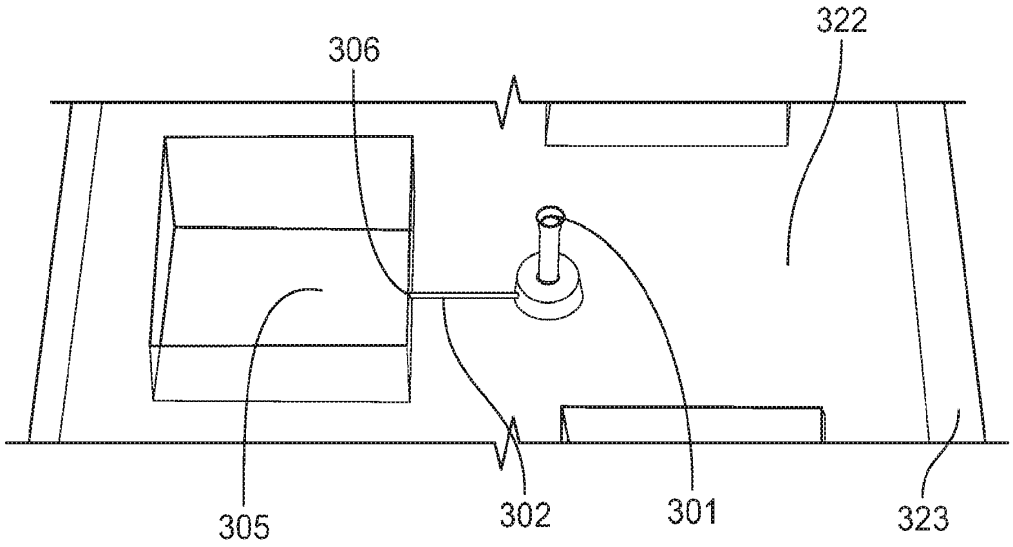

FIG. 16A

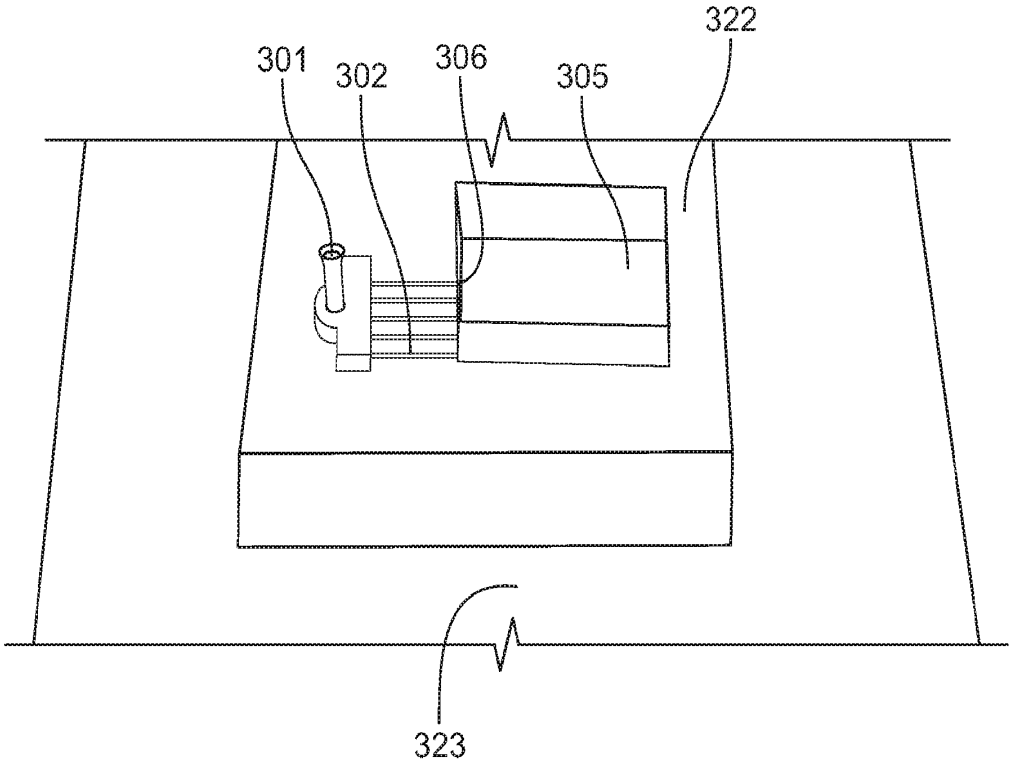

FIG. 16B

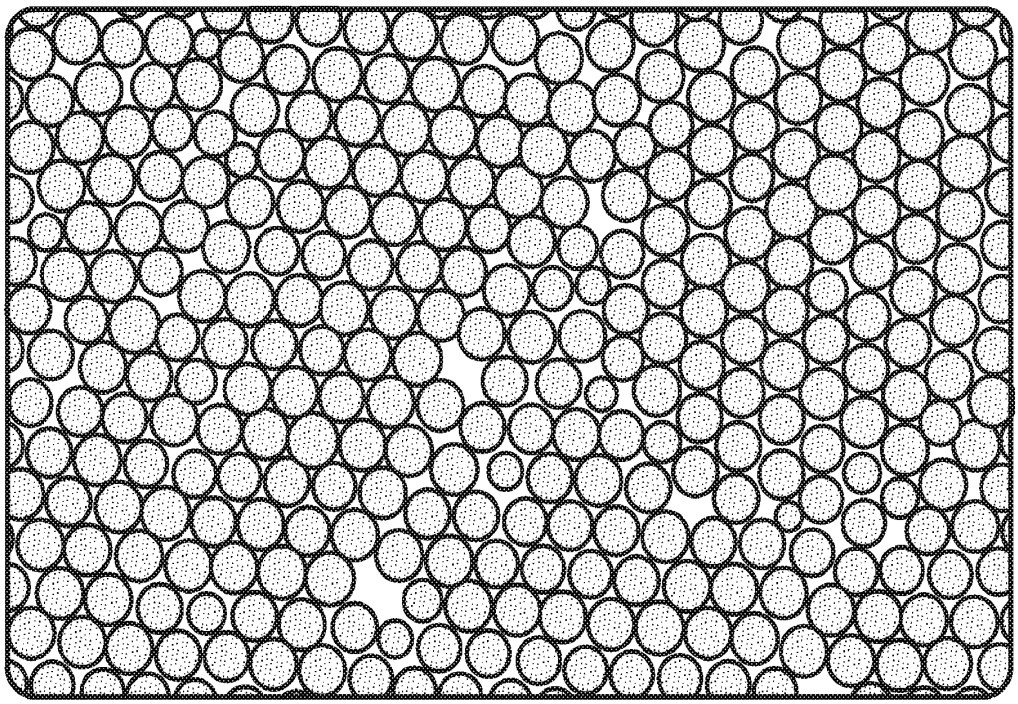

Hydroge | beads: mean size 123 μm (Std: 6 μm)

FIG. 17

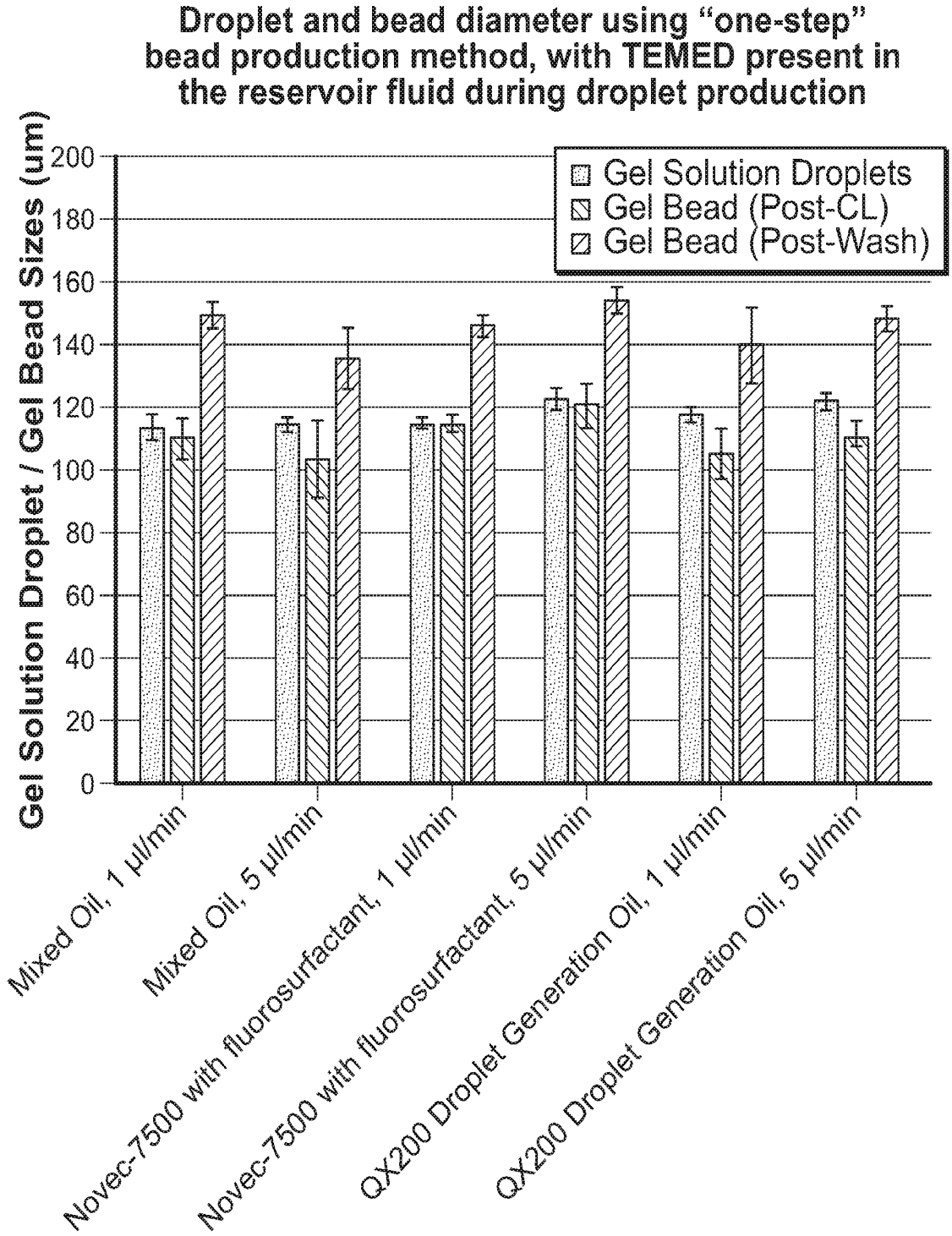
Droplet and bead diameter using "one-step" bead production method, with TEMED present in the reservoir fluid during droplet production
Gel Solution Droplet / Gel Bead Sizes (um)
0
20
40
60
80
100
120
140
160
180
200
Gel Solution Droplets
Gel Bead (Post-CL)
Gel Bead (Post-Wash)
Mixed Oil, 1 µl/min
Mixed Oil, 5 µl/min
Novec-7500 with fluorosurfactant, 1 µl/min
Novec-7500 with fluorosurfactant, 5 µl/min
QX200 Droplet Generation Oil, 1 µl/min
QX200 Droplet Generation Oil, 5 µl/min

FIG. 18

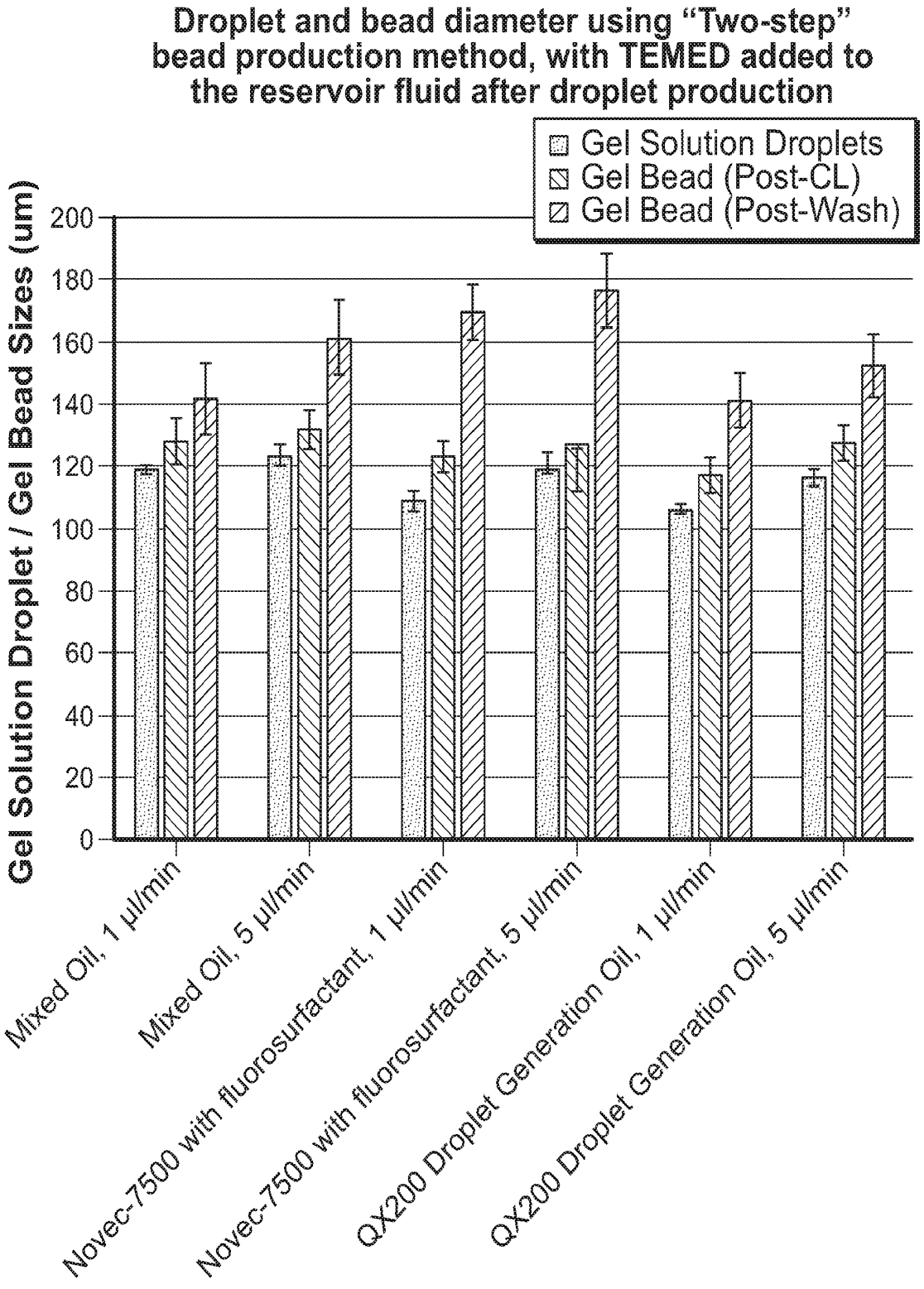
Droplet and bead diameter using "Two-step" bead production method, with TEMED added to the reservoir fluid after droplet production
Gel Solution Droplets
Gel Bead (Post-CL)
Gel Bead (Post-Wash)
Gel Solution Droplet / Gel Bead Sizes (um)
0
20
40
60
80
100
120
140
160
180
200
Mixed Oil, 1 µl/min
Mixed Oil, 5 µl/min
Novec-7500 with fluorosurfactant, 1 µl/min
Novec-7500 with fluorosurfactant, 5 µl/min
QX200 Droplet Generation Oil, 1 µl/min
QX200 Droplet Generation Oil, 5 µl/min

FIG. 19