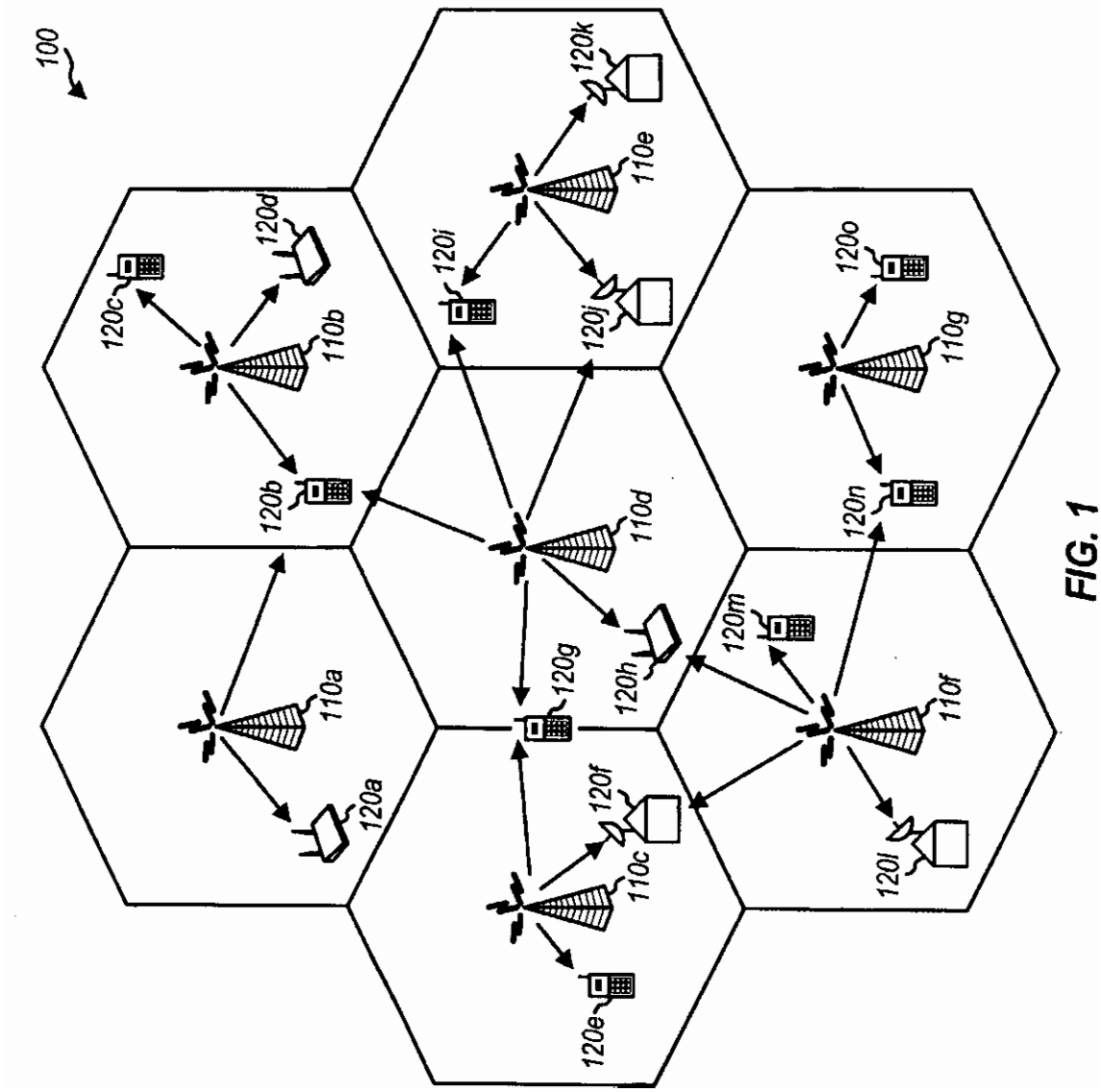
100
110a
110b
110c
110d
110e
110f
110g
120a
120b
120c
120d
120e
120f
120g
120h
120i
120j
120k
120l
120m
120n
120o

FIG. 1

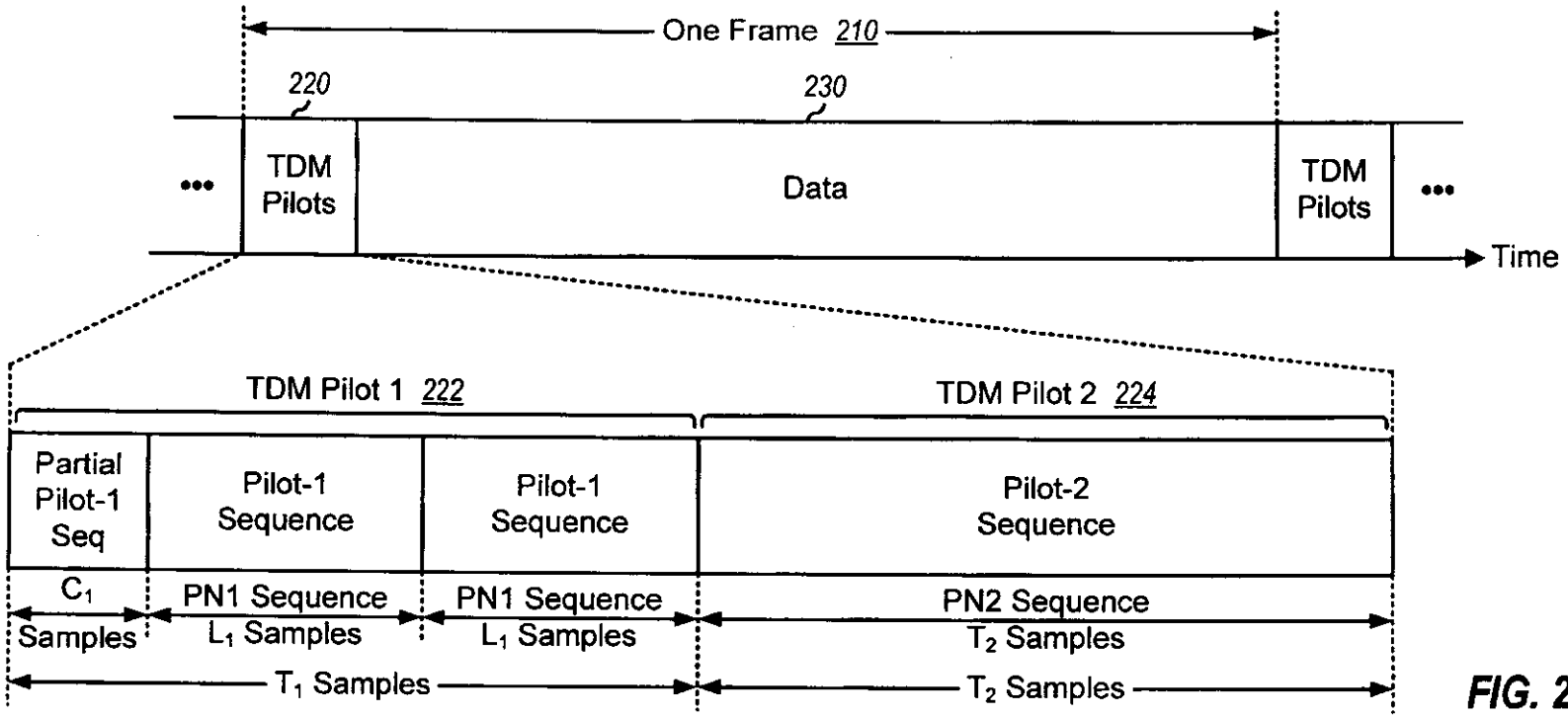
One Frame 210
220
230
TDM Pilots
Data
TDM Pilots
Time
TDM Pilot 1 222
TDM Pilot 2 224
Partial Pilot-1 Seq
Pilot-1 Sequence
Pilot-1 Sequence
Pilot-2 Sequence
C1 Samples
PN1 Sequence L1 Samples
PN1 Sequence L1 Samples
PN2 Sequence T2 Samples
T1 Samples
T2 Samples

FIG. 2A

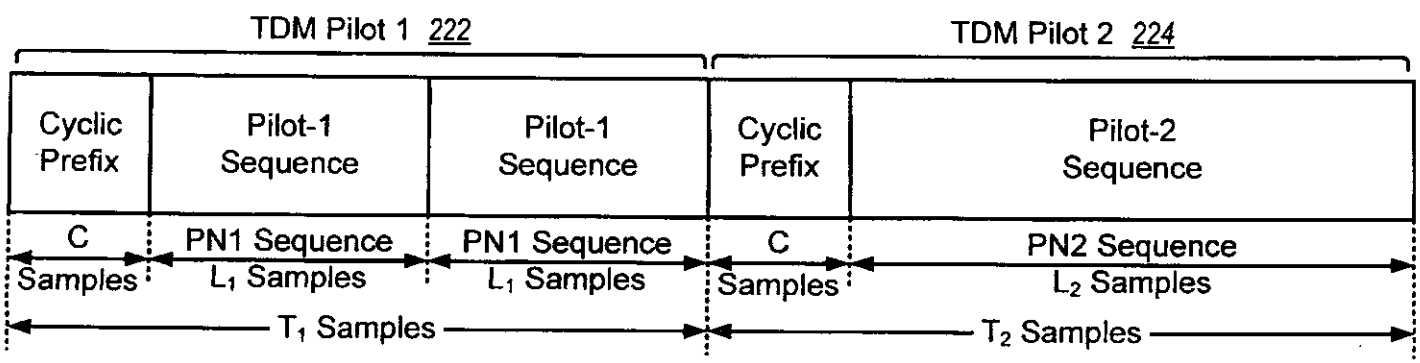
TDM Pilot 1 222
TDM Pilot 2 224
Cyclic Prefix
Pilot-1 Sequence
Pilot-1 Sequence
Cyclic Prefix
Pilot-2 Sequence
C Samples
PN1 Sequence L1 Samples
PN1 Sequence L1 Samples
C Samples
PN2 Sequence L2 Samples
T1 Samples
T2 Samples

FIG. 2B

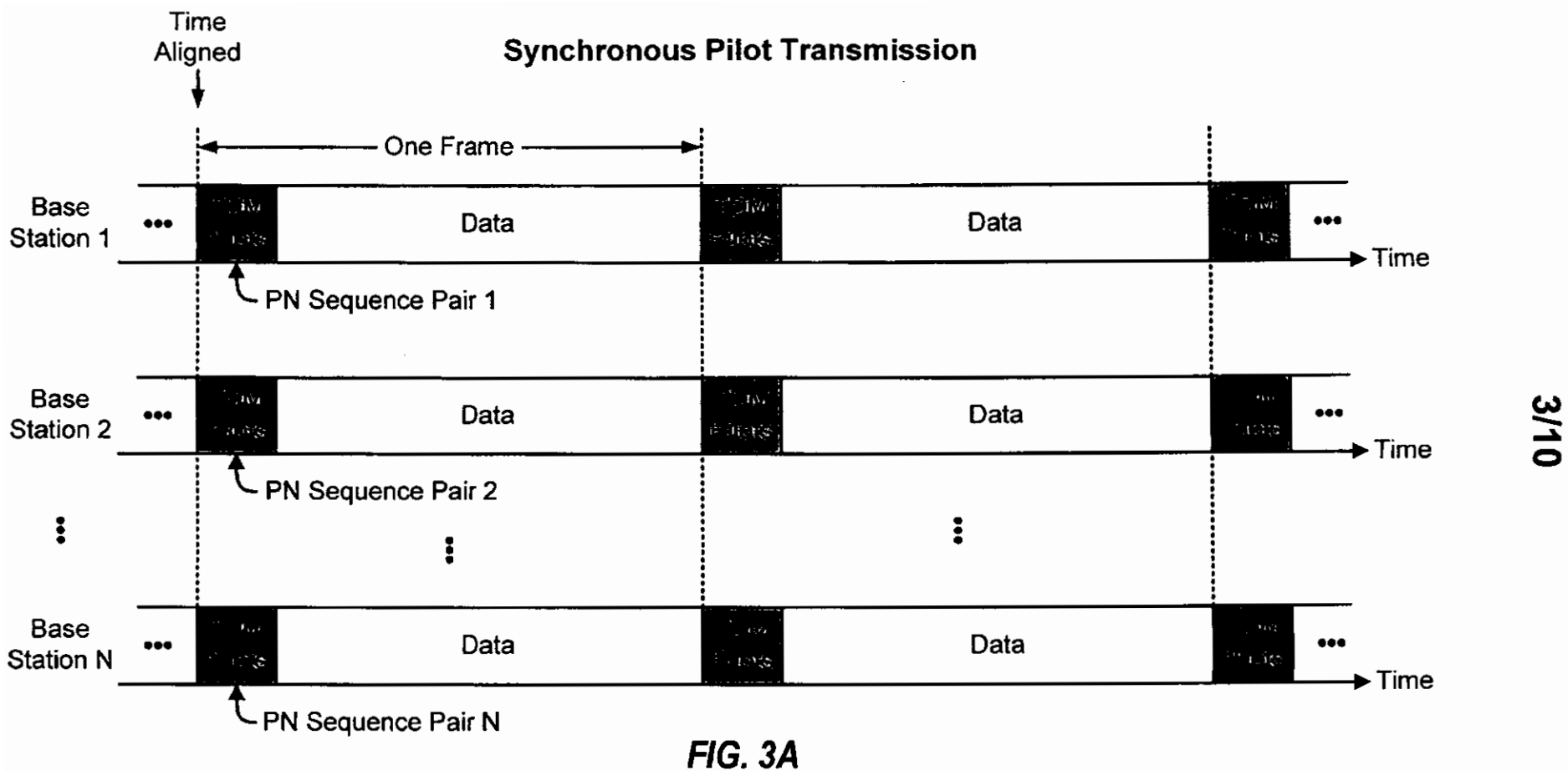
Time Aligned
Synchronous Pilot Transmission
One Frame
Base Station 1
Data
Data
Time
PN Sequence Pair 1
Base Station 2
Data
Data
Time
PN Sequence Pair 2
Base Station N
Data
Data
Time
PN Sequence Pair N

FIG. 3A

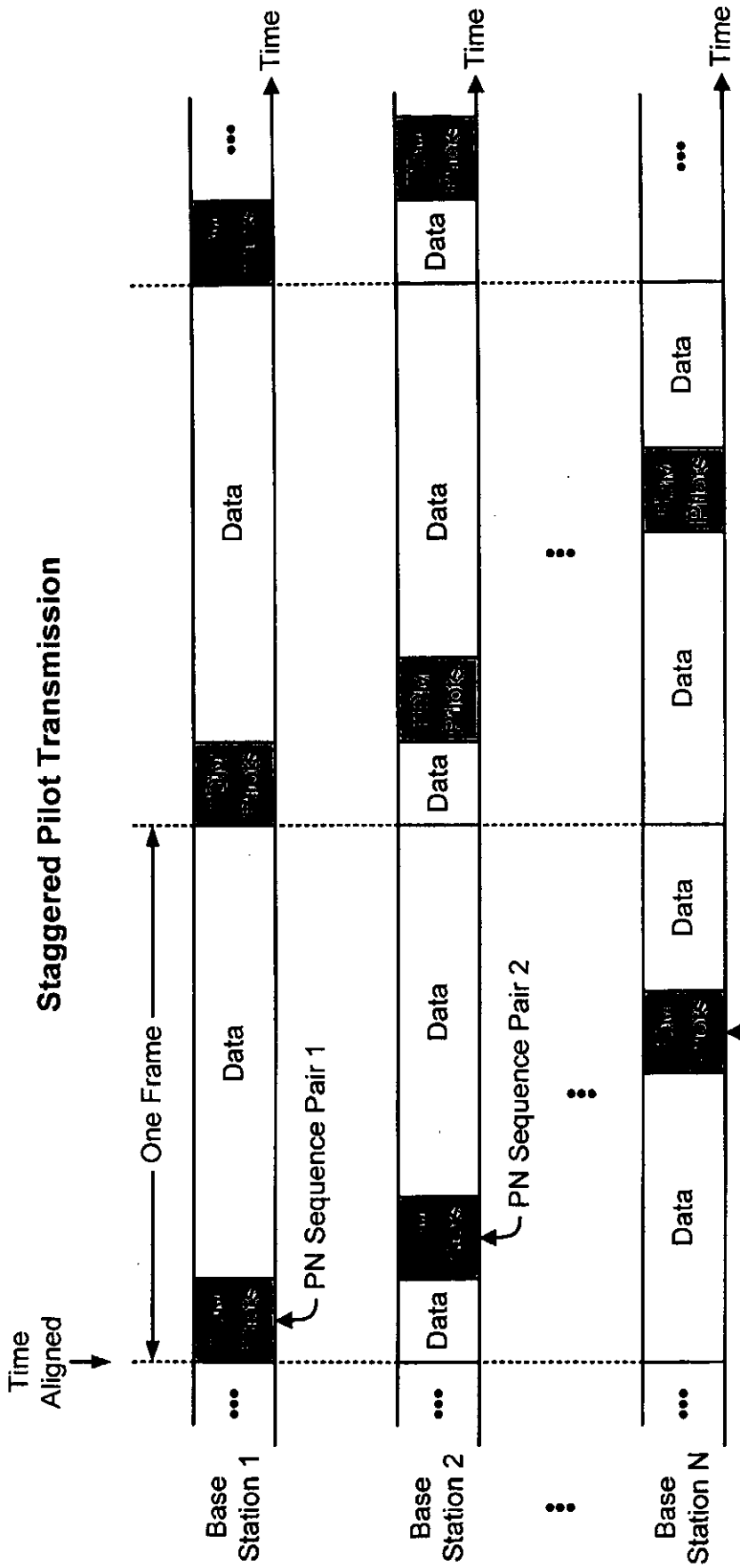
Staggered Pilot Transmission
Time Aligned
One Frame
Base Station 1
Base Station 2
Base Station N
Data
PN Sequence Pair 1
PN Sequence Pair 2
PN Sequence Pair N
Time

FIG. 3B

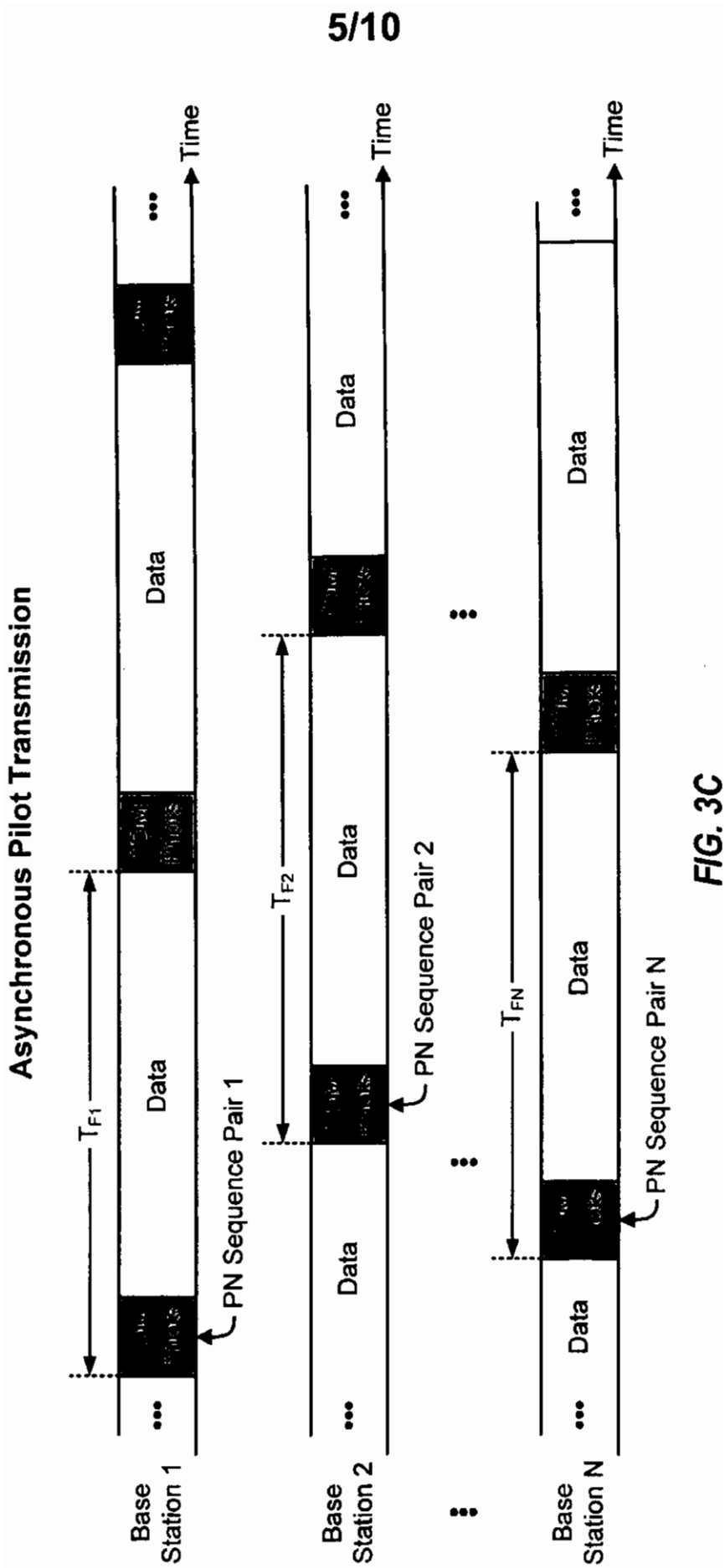
Asynchronous Pilot Transmission
Base Station 1
Base Station 2
Base Station N
Time
Data
PN Sequence Pair 1
PN Sequence Pair 2
PN Sequence Pair N
T_{F1}
T_{F2}
T_{FN}

FIG. 3C

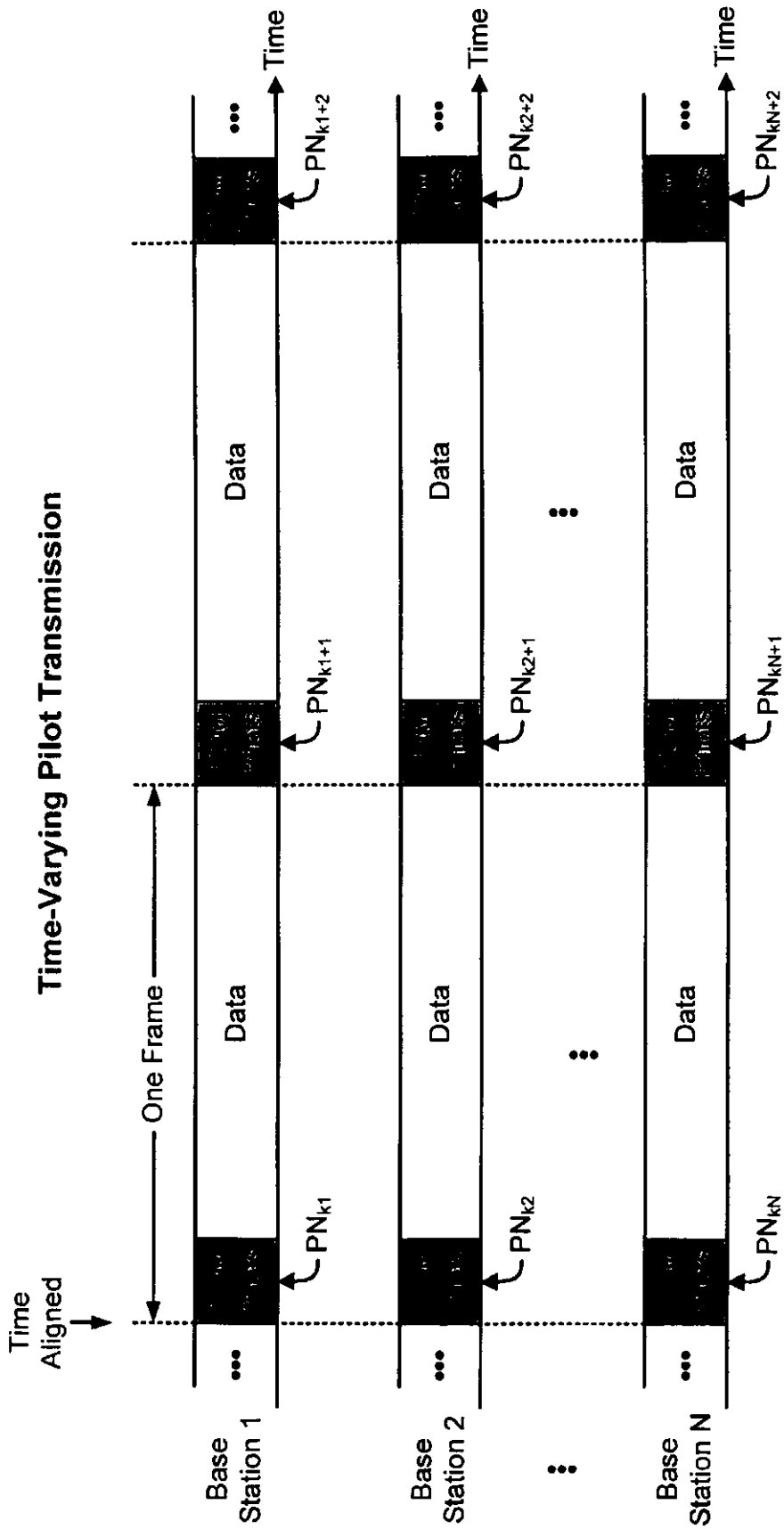
Time-Varying Pilot Transmission
Time Aligned
One Frame
Data
Time
Base Station 1
Base Station 2
Base Station N
PN_{k1}
PN_{k1+1}
PN_{k1+2}
PN_{k2}
PN_{k2+1}
PN_{k2+2}
PN_{kN}
PN_{kN+1}
PN_{kN+2}

FIG. 3D

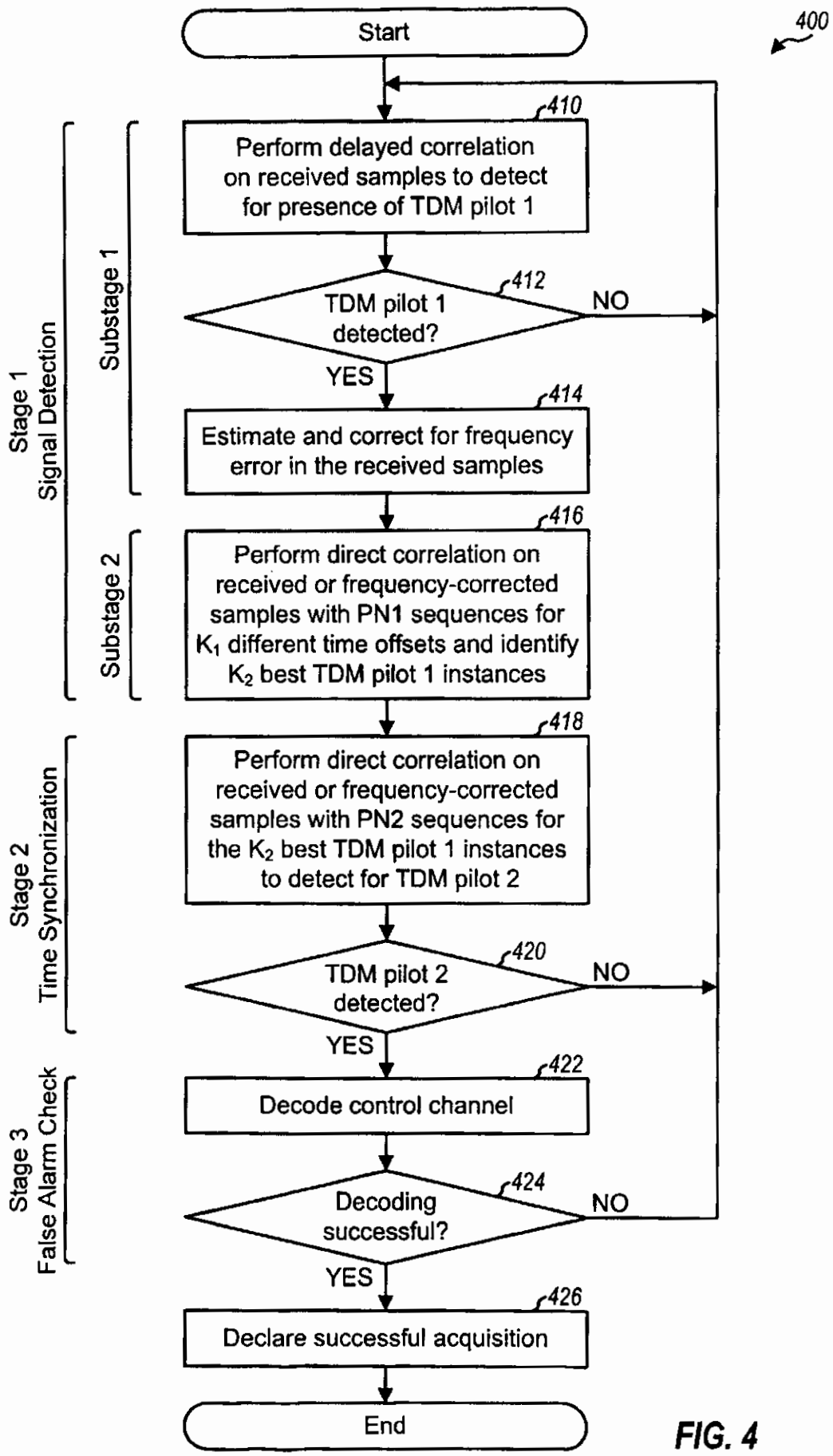
400
Start
410
Perform delayed correlation on received samples to detect for presence of TDM pilot 1
412
TDM pilot 1 detected?
NO
YES
414
Estimate and correct for frequency error in the received samples
416
Perform direct correlation on received or frequency-corrected samples with PN1 sequences for K_1 different time offsets and identify K_2 best TDM pilot 1 instances
418
Perform direct correlation on received or frequency-corrected samples with PN2 sequences for the K_2 best TDM pilot 1 instances to detect for TDM pilot 2
420
TDM pilot 2 detected?
NO
YES
422
Decode control channel
424
Decoding successful?
NO
YES
426
Declare successful acquisition
End
Stage 1 Signal Detection
Substage 1
Substage 2
Stage 2 Time Synchronization
Stage 3 False Alarm Check

FIG. 4

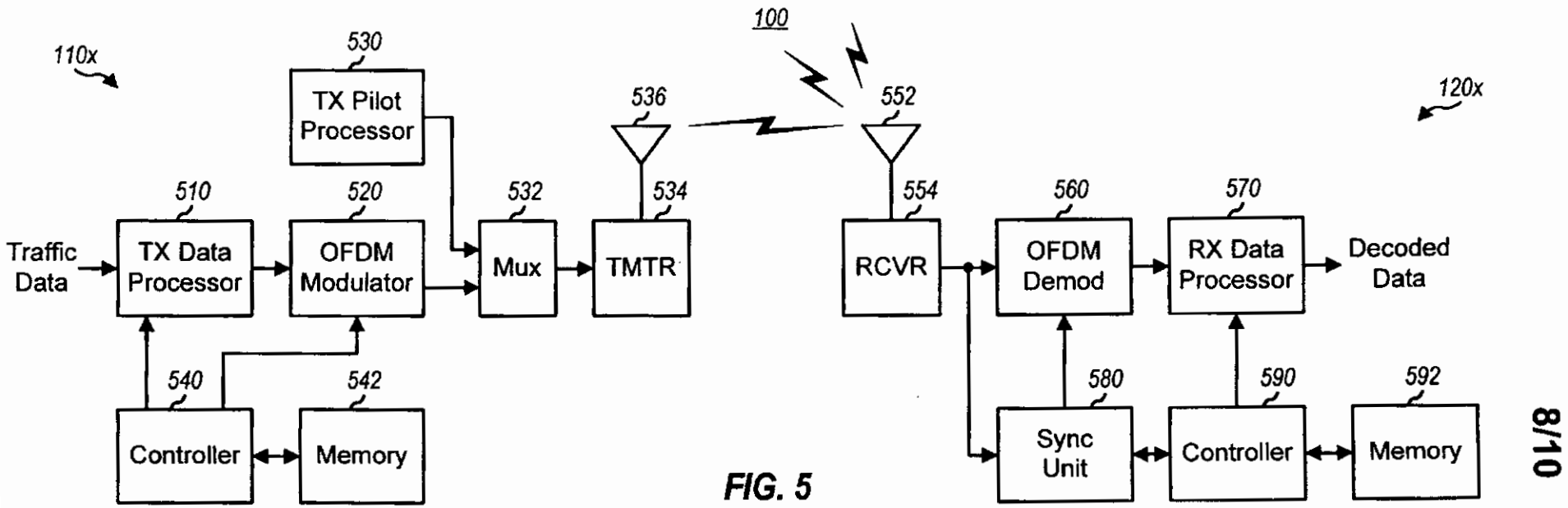
100
110x
120x
530
TX Pilot Processor
536
552
510
520
532
534
554
560
570
Traffic Data
TX Data Processor
OFDM Modulator
Mux
TMTR
RCVR
OFDM Demod
RX Data Processor
Decoded Data
540
542
580
590
592
Controller
Memory
Sync Unit
Controller
Memory

FIG. 5

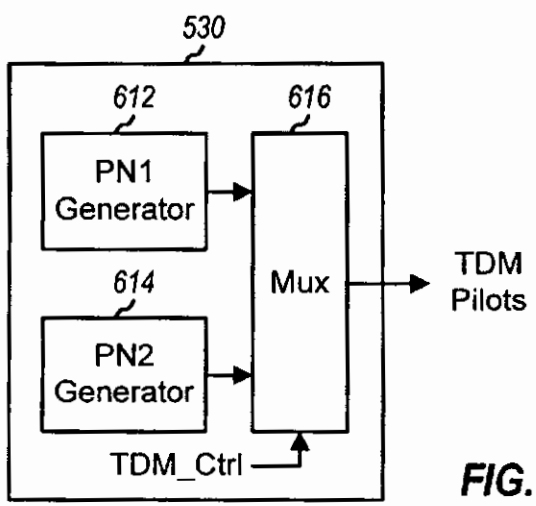
530
612
616
PN1 Generator
614
PN2 Generator
Mux
TDM Pilots
TDM_Ctrl

FIG. 6

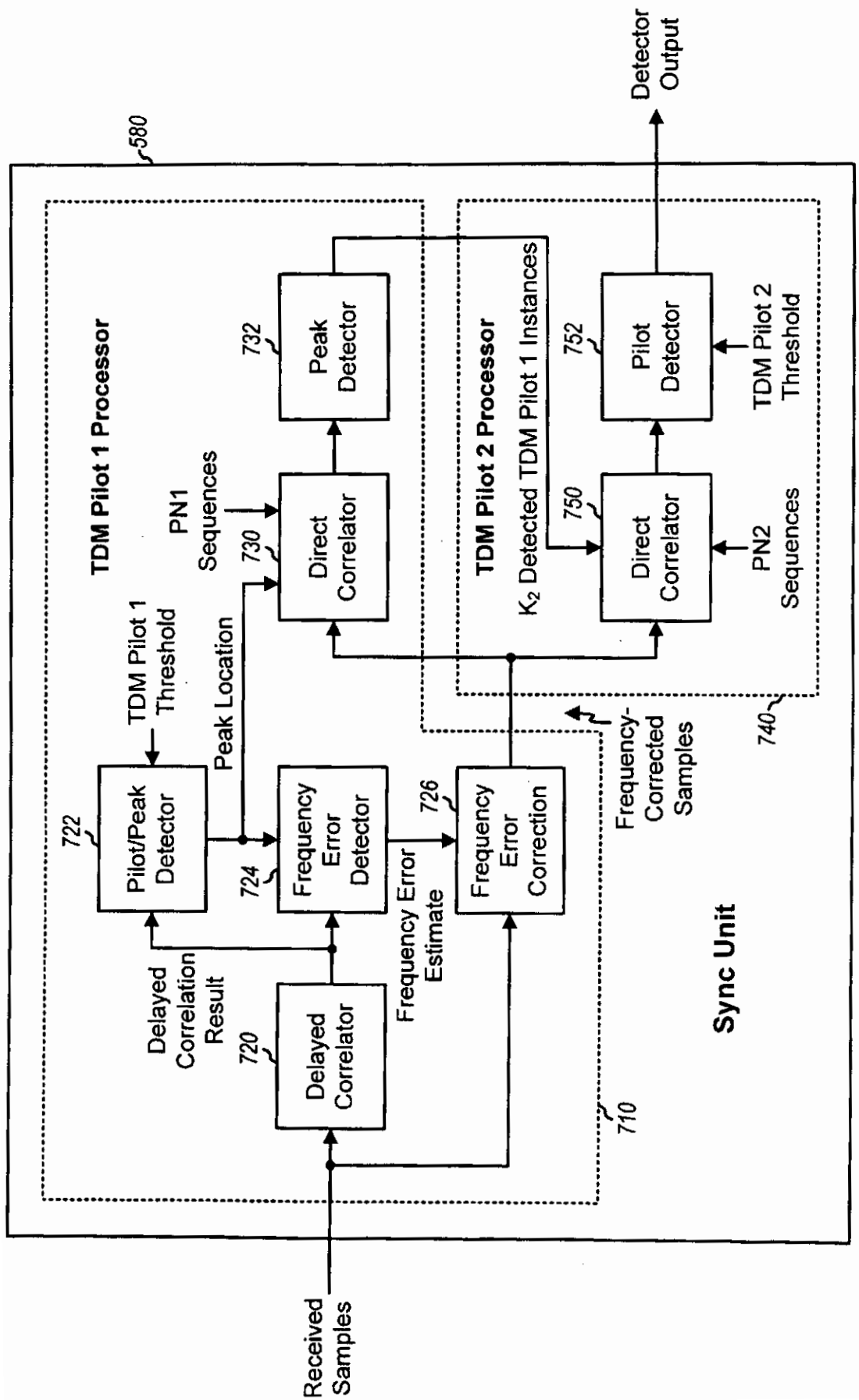
Received Samples
580
TDM Pilot 1 Processor
TDM Pilot 2 Processor
Sync Unit
710
740
Pilot/Peak Detector
722
Delayed Correlator
720
Frequency Error Detector
724
Frequency Error Correction
726
Direct Correlator
730
Peak Detector
732
Direct Correlator
750
Pilot Detector
752
Delayed Correlation Result
Frequency Error Estimate
Peak Location
TDM Pilot 1 Threshold
PN1 Sequences
K_2 Detected TDM Pilot 1 Instances
PN2 Sequences
TDM Pilot 2 Threshold
Frequency-Corrected Samples
Detector Output

FIG. 7

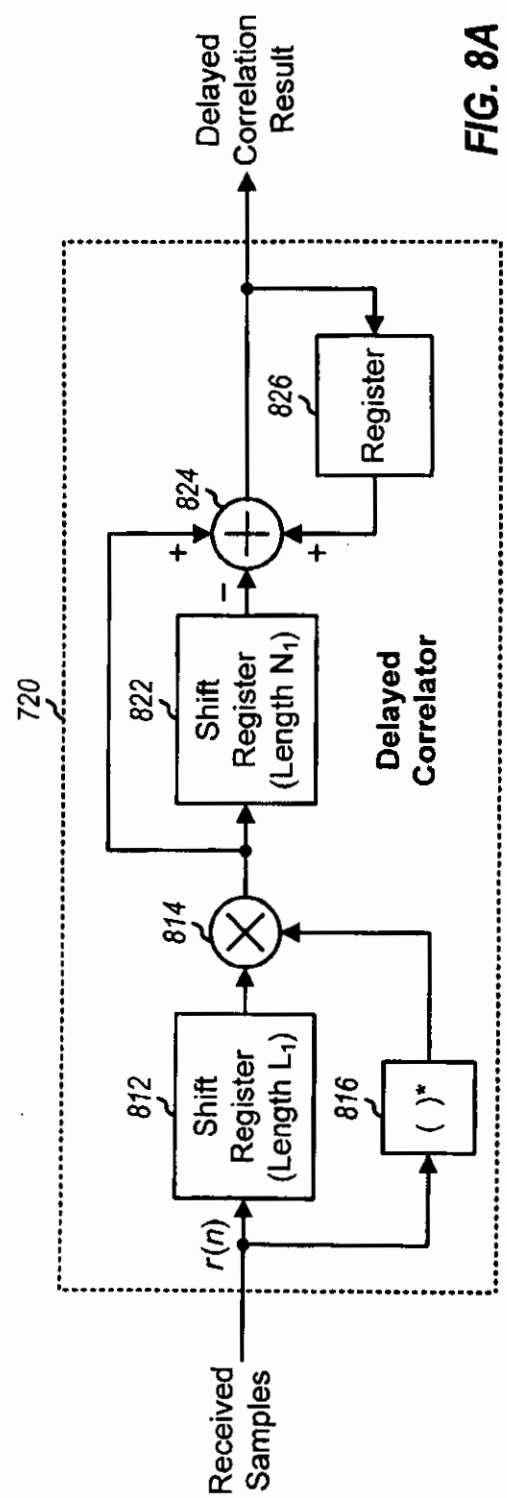
720
Received Samples
r(n)
812
Shift Register (Length L_1)
816
( )*
814
822
Shift Register (Length N_1)
824
+
+
−
826
Register
Delayed Correlation Result
Delayed Correlator

FIG. 8A

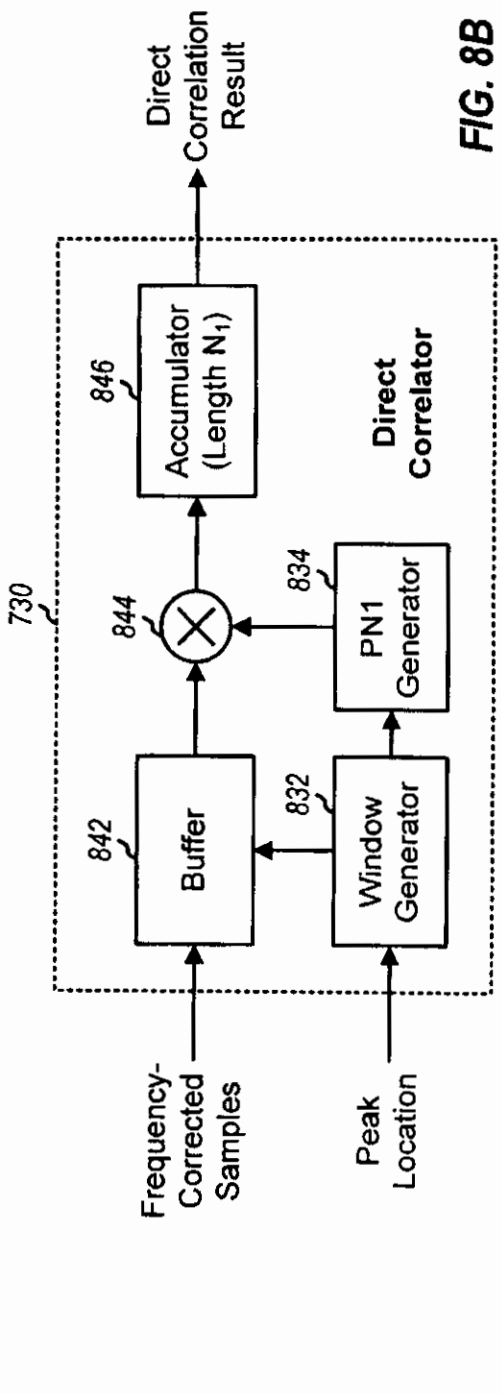
730
Frequency-Corrected Samples
842
Buffer
844
846
Accumulator (Length N_1)
Direct Correlation Result
Peak Location
832
Window Generator
834
PN1 Generator
Direct Correlator

FIG. 8B