(12) INTERNATIONAL APPLICATION PUBLISHED UNDER THE PATENT COOPERATION TREATY (PCT)

(19) World Intellectual Property Organization
International Bureau

(43) International Publication Date
16 December 2004 (16.12.2004)

PCT

(10) International Publication Number
WO 2004/108881 A3

(51) International Patent Classification[7]: C12M 1/00

(21) International Application Number:
PCT/US2004/016437

(22) International Filing Date: 25 May 2004 (25.05.2004)

(25) Filing Language: English

(26) Publication Language: English

(30) Priority Data:

60/474,479	30 May 2003 (30.05.2003)	US
10/845,914	14 May 2004 (14.05.2004)	US

(71) Applicant *(for all designated States except US)*: **BIOLEX, INC.** [US/US]; 158 Credle Street, Pittsboro, NC 27312 (US).

(72) Inventors; and

(75) Inventors/Applicants *(for US only)*: **BRANSON, R., Edward** [US/US]; 1329 Salem Lane, Chapel Hill, NC 27516 (US). **EVERETT, Keith** [US/US]; 684 Arrowhead Loop, Pittsboro, NC 27312 (US). **HESTER, Bob** [US/US]; 2314 Sterling Green Drive, Morrisville, NC 27560 (US). **VICKERS, Timothy, B.** [US/US]; 212 Faison Road, Chapel Hill, NC 27517 (US).

(74) Agents: **PICHÉ, Jason, O.** et al.; Alston & Bird LLP, Bank of America Plaza, Suite 4000, 101 South Tryon Street, Charlotte, NC 28280-4000 (US).

(81) Designated States *(unless otherwise indicated, for every kind of national protection available)*: AE, AG, AL, AM, AT, AU, AZ, BA, BB, BG, BR, BW, BY, BZ, CA, CH, CN, CO, CR, CU, CZ, DE, DK, DM, DZ, EC, EE, EG, ES, FI, GB, GD, GE, GH, GM, HR, HU, ID, IL, IN, IS, JP, KE, KG, KP, KR, KZ, LC, LK, LR, LS, LT, LU, LV, MA, MD, MG, MK, MN, MW, MX, MZ, NA, NI, NO, NZ, OM, PG, PH, PL, PT, RO, RU, SC, SD, SE, SG, SK, SL, SY, TJ, TM, TN, TR, TT, TZ, UA, UG, US, UZ, VC, VN, YU, ZA, ZM, ZW.

(84) Designated States *(unless otherwise indicated, for every kind of regional protection available)*: ARIPO (BW, GH, GM, KE, LS, MW, MZ, NA, SD, SL, SZ, TZ, UG, ZM, ZW), Eurasian (AM, AZ, BY, KG, KZ, MD, RU, TJ, TM), European (AT, BE, BG, CH, CY, CZ, DE, DK, EE, ES, FI, FR, GB, GR, HU, IE, IT, LU, MC, NL, PL, PT, RO, SE, SI, SK, TR), OAPI (BF, BJ, CF, CG, CI, CM, GA, GN, GQ, GW, ML, MR, NE, SN, TD, TG).

Published:
— *with international search report*

[Continued on next page]

(54) Title: BIOREACTOR FOR GROWING BIOLOGICAL MATERIALS SUPPORTED ON A LIQUID SURFACE

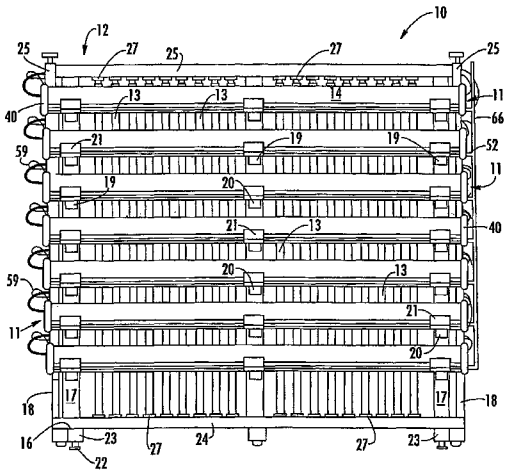

(57) Abstract: A bioreactor assembly (10) of the present invention for holding a media and supporting growth of a plurality of plants. The assembly includes a light source (13) and a container (11)having a light transmissive wall structure and defining a reservoir. A major axis of the reservoir is substantially horizontal allowing the reservoir to be filled with media to a partial level and to define a relatively large surface area for support of the plants. The assembly may also include clamps (40) to secure and seal separate wall structure portions of the container together, and end caps to the wall portions, to define an aseptic environment. As another option, the clamps may define openings therethrough that allow passage of various devices for measuring and controlling bioreactor function such as a gas supply nozzle, a gas exit nozzle, an air temperature probe, a pH probe, a sampling drain, a gas composition probe and a media temperature probe.

WO 2004/108881 A3

(88) Date of publication of the international search report:
3 March 2005

For two-letter codes and other abbreviations, refer to the "Guidance Notes on Codes and Abbreviations" appearing at the beginning of each regular issue of the PCT Gazette.